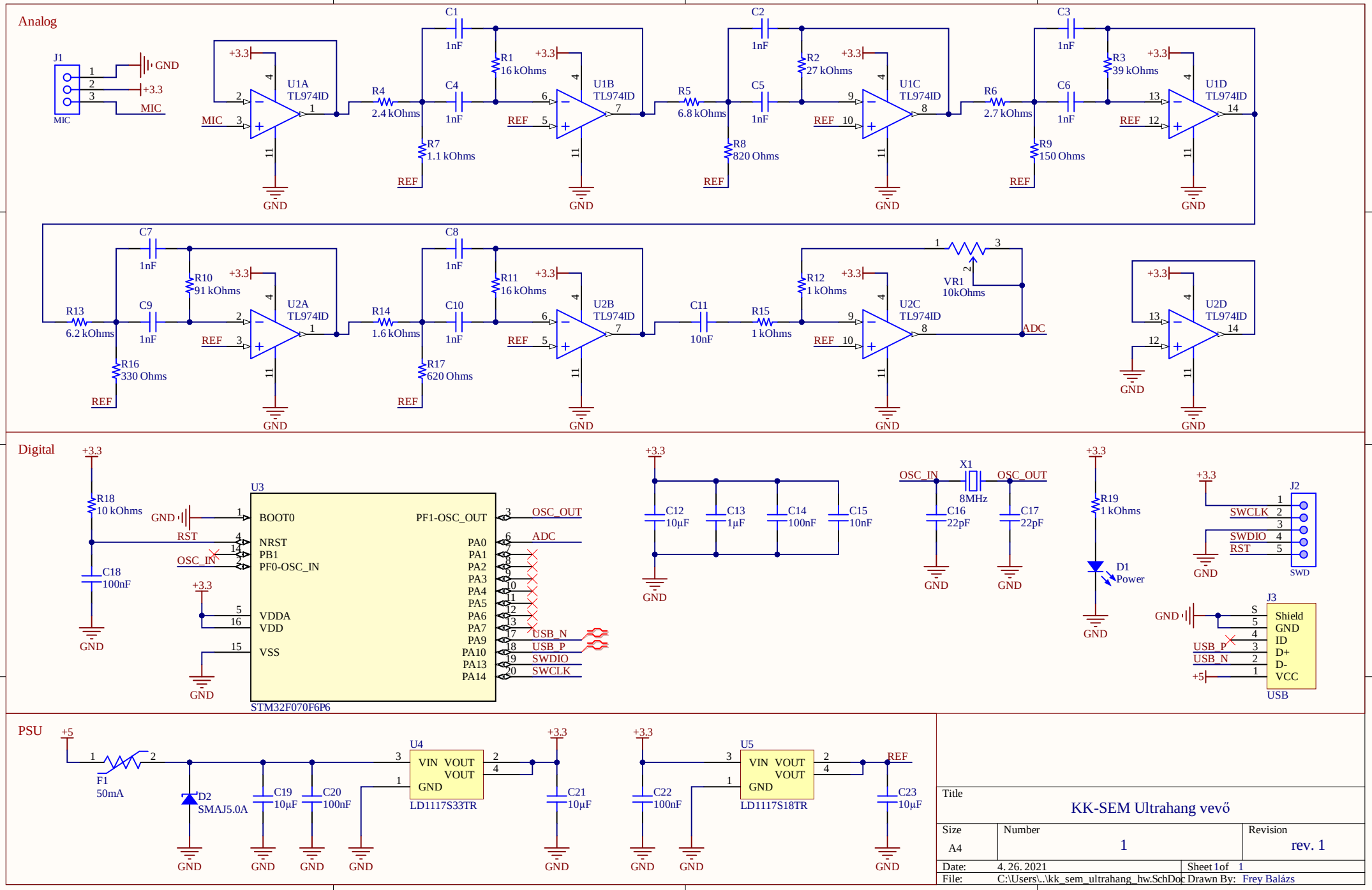
Analog
J1
MIC
GND
+3.3
U1A TL974ID
U1B TL974ID
U1C TL974ID
U1D TL974ID
U2A TL974ID
U2B TL974ID
U2C TL974ID
U2D TL974ID
R1 16 kOhms
R2 27 kOhms
R3 39 kOhms
R4 2.4 kOhms
R5 6.8 kOhms
R6 2.7 kOhms
R7 1.1 kOhms
R8 820 Ohms
R9 150 Ohms
R10 91 kOhms
R11 16 kOhms
R12 1 kOhms
R13 6.2 kOhms
R14 1.6 kOhms
R15 1 kOhms
R16 330 Ohms
R17 620 Ohms
C1 1nF
C2 1nF
C3 1nF
C4 1nF
C5 1nF
C6 1nF
C7 1nF
C8 1nF
C9 1nF
C10 1nF
C11 10nF
VR1 10kOhms
REF
ADC
Digital
U3
STM32F070F6P6
BOOT0
NRST
PB1
PF0-OSC_IN
VDDA
VDD
VSS
PF1-OSC_OUT
PA0
PA1
PA2
PA3
PA4
PA5
PA6
PA7
PA9
PA10
PA13
PA14
OSC_IN
OSC_OUT
USB_N
USB_P
SWDIO
SWCLK
RST
R18 10 kOhms
C18 100nF
C12 10µF
C13 1µF
C14 100nF
C15 10nF
X1 8MHz
C16 22pF
C17 22pF
R19 1 kOhms
D1 Power
J2
SWD
J3
USB
Shield
GND
ID
D+
D-
VCC
+5
PSU
F1 50mA
D2 SMAJ5.0A
C19 10µF
C20 100nF
U4
LD1117S33TR
VIN VOUT
VOUT
GND
C21 10µF
C22 100nF
U5
LD1117S18TR
C23 10µF
Title
KK-SEM Ultrahang vevő
Size
A4
Number
1
Revision
rev. 1
Date: 4. 26. 2021
Sheet 1of 1
File: C:\Users\..\kk_sem_ultrahang_hw.SchDoc
Drawn By: Frey Balázs