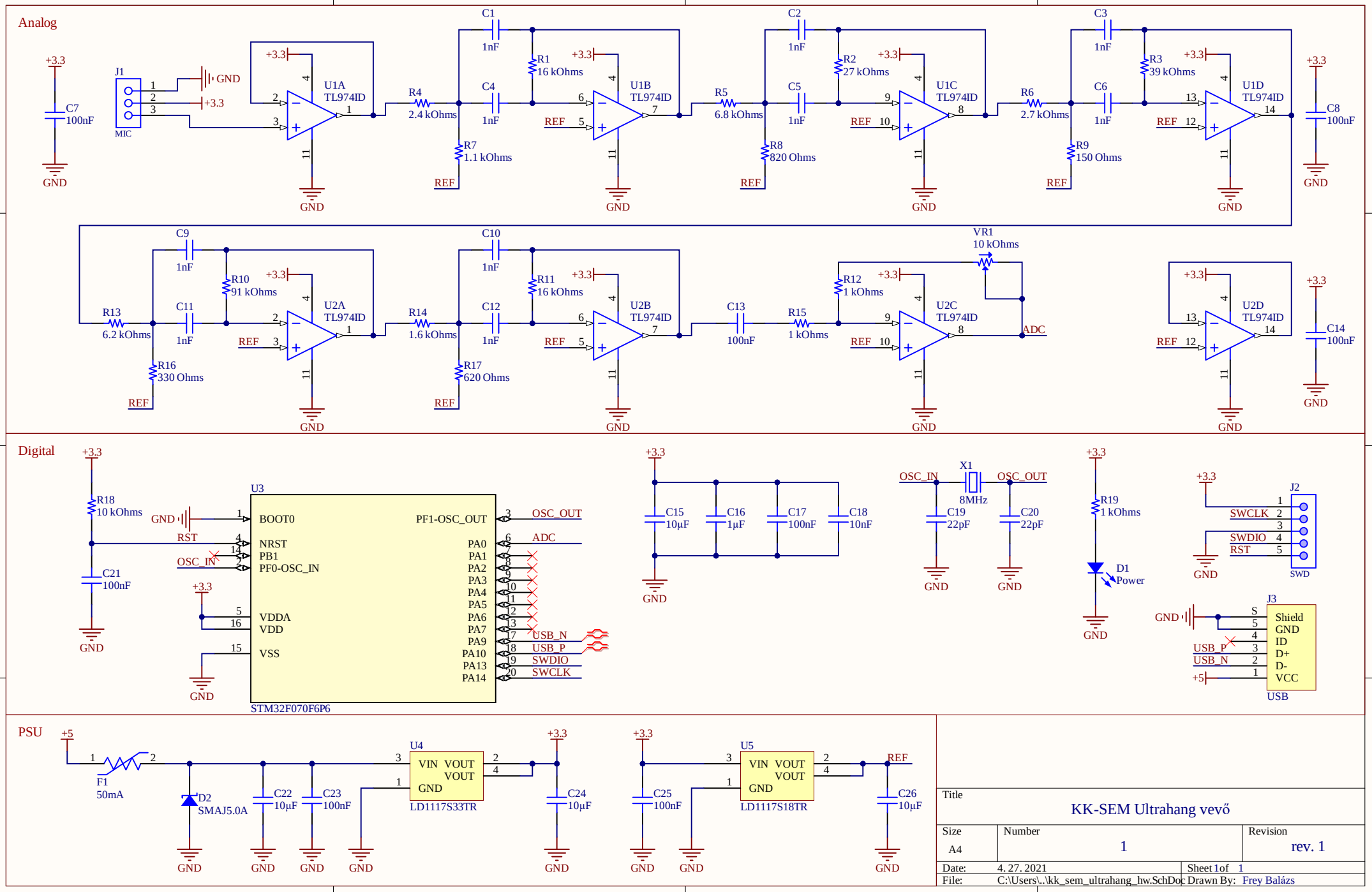

Title	KK-SEM Ultrahang vevő
Size	A4
Number	1
Revision	rev. 1
Date:	4. 27. 2021
Sheet 1of	1
File:	C:\Users\..\kk_sem_ultrahang_hw.SchDoc
Drawn By:	Frey Balázs