ALMA MATER STUDIORUM
UNIVERSITÀ DI BOLOGNA

Physics and Astronomy Department - DIFA

Master's Degree in Nuclear and Subnuclear Physics

FPGA-based system for the emulation of a detector digitized signal and trigger distribution

Presentation for the Electronics for Physics of Things Course

Presented by:

Simone Pasquini

Academic year 2024/2025

Particle physics experiment data flow

- Standard **data flow** in **experimental physics**: linear and interdependent

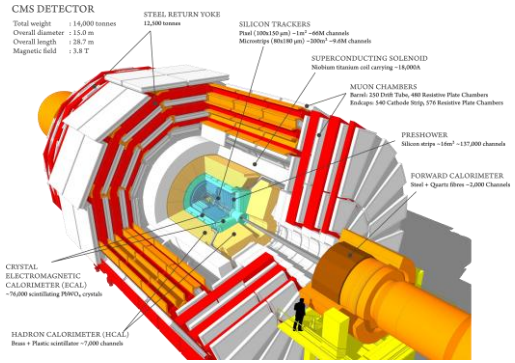

DETECTOR

Front-end electronics → **TRIGGER** → Trigger decision → **DAQ** → Raw data → **STORAGE**

Amplify the signal and convert it to a **digital** pulse

Select real events (**signal**) over **background** with **minimal latency**

Move data to **permanent storage** for **offline analysis**

Particle physics experiment data flow

- Standard **data flow** in **experimental physics**: linear and interdependent

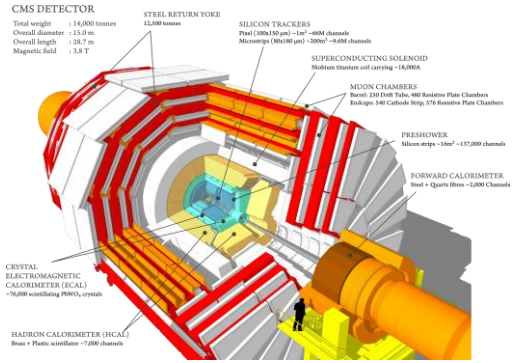

DETECTOR → Front-end electronics → **TRIGGER** → Trigger decision → **DAQ** → Raw data → **STORAGE**

- Front-end electronics: **Amplify** the signal and convert it to a **digital** pulse
- Trigger decision: Select real events (**signal**) over **background** with **minimal latency**
- Raw data: Move data to **permanent storage** for **offline analysis**

- ***A CRITICAL CHALLENGE***: a detector is **not always available** during the development of the **TDAQ** (Trigger and Data Acquisition) system → how can we test the **trigger & DAQ** electronics **without a physical detector/sensor**?
- ***Solution*** → **signal emulation**, as detector signal is often well understood

In this project: build an **FPGA-based emulator** to reproduce a **detector digitized signal** and to develop the **trigger/busy logic** and its **distribution**

A physical case: cosmic muons at sea level

- **Cosmic muons at sea level** → a simple and well-tested **signal source**
- Muon is a **charged lepton:**
  - **Abundant at sea level** from high energy (> 1 GeV) cosmic ray interactions (89% p)
  - Before decaying into $e^{\pm}$, muons reach sea level with a **flux of ≈ 1 cm^{-2} min^{-1}**
  - Easily detectable with **scintillators** + **PMTs**, ideal for **detector calibration**

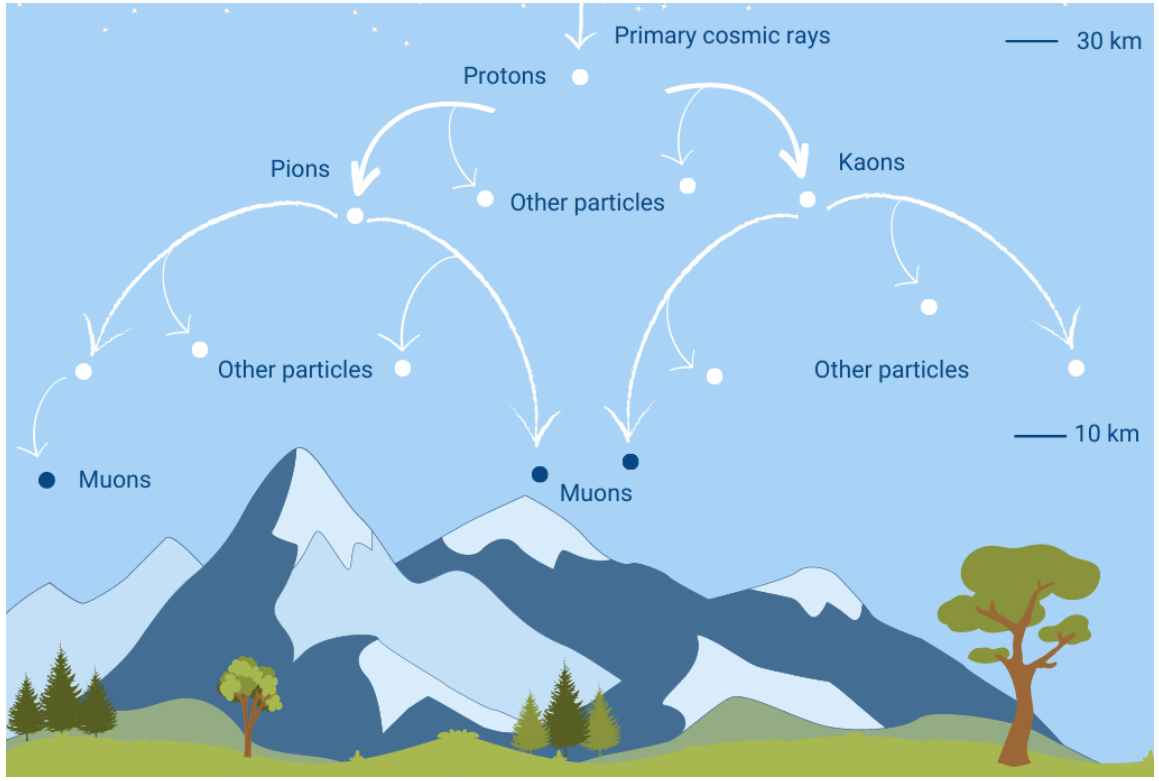

- **OUR CASE STUDY**:
  - Assuming a detector geometry ≈ 600 cm^2
  - Expected **muon rate** ≈ 600 min^{-1} → **10 Hz** (every **100 ms**)

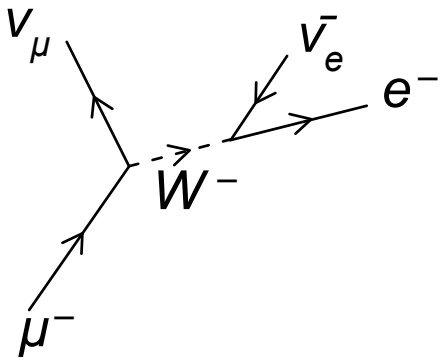

Why use an emulator?

- In this project, no detector/sensor available, but TDAQ ready
- **Emulator**: system that **digitally reproduces** the **signals** expected from a **physical detector/sensor** → if the detector signal is known in advance, it can be **generated**
- **Do we know** the detector **digitized signal** generated by muons? → **YES**
- **Do we know** the muon pulse rate? → **10 Hz**
- Then, we can:
  - **Reproduce muon signals**
  - **Test TDAQ without the detector**
- The **detector is replaced by its digital twin**

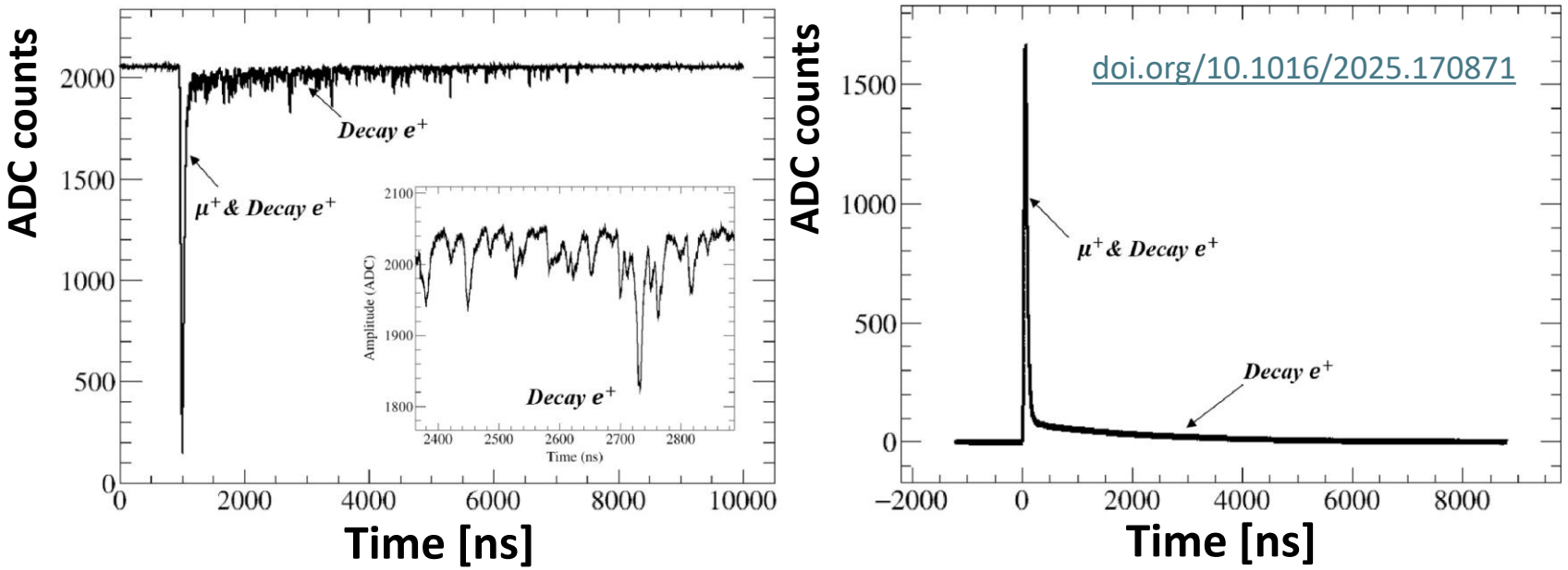

Signal waveform generated by a high-purity **muon beam pulse** on PMT (left), and average signal waveform after waveform processing (right)

Why use an FPGA-based emulator?

- **CPU**: higher latency and sequential processing (SOFTWARE)
- **GPU**: parallel processing but very power hungry and still to general purpose if the task is always the same (generating a waveform)
- **ASIC**: custom-designed, extreme costs and development time
- **FPGA**: ultra-low latency, parallel processing, field reprogrammable, direct I/O → requires dealing with **hardware resources** while retaining the **reconfigurability** typical of **software** development (FIRMWARE through VHDL or Verilog)

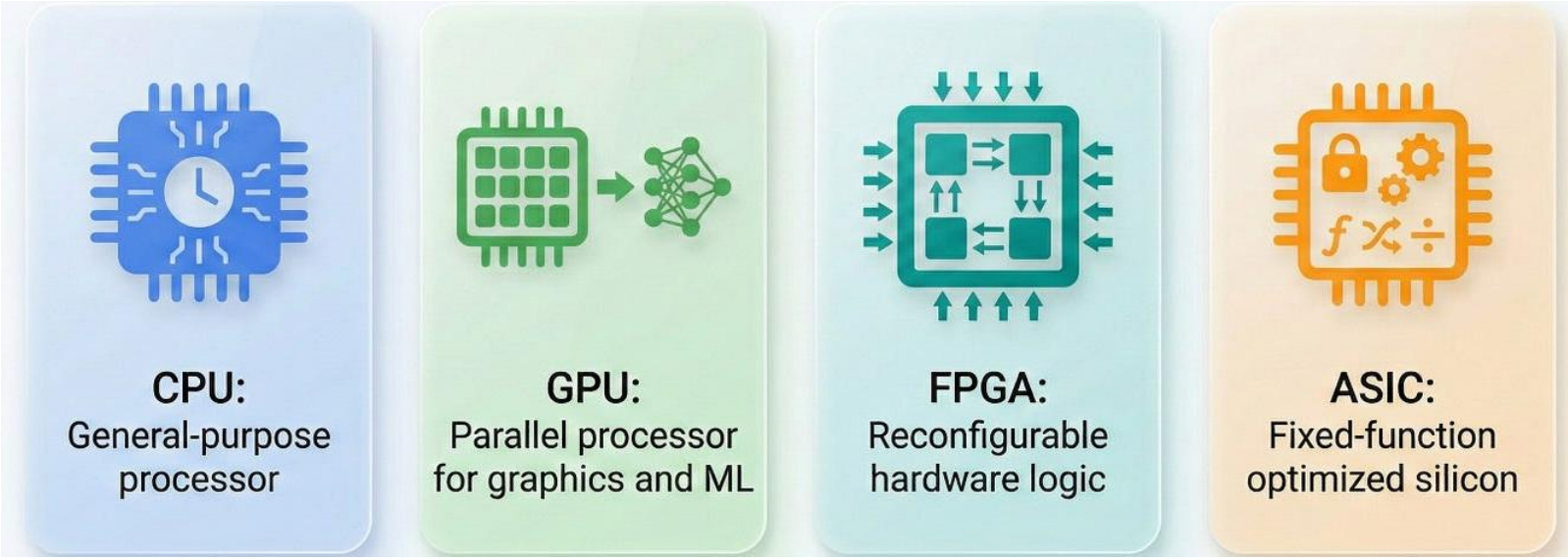

Experimental setup and objectives

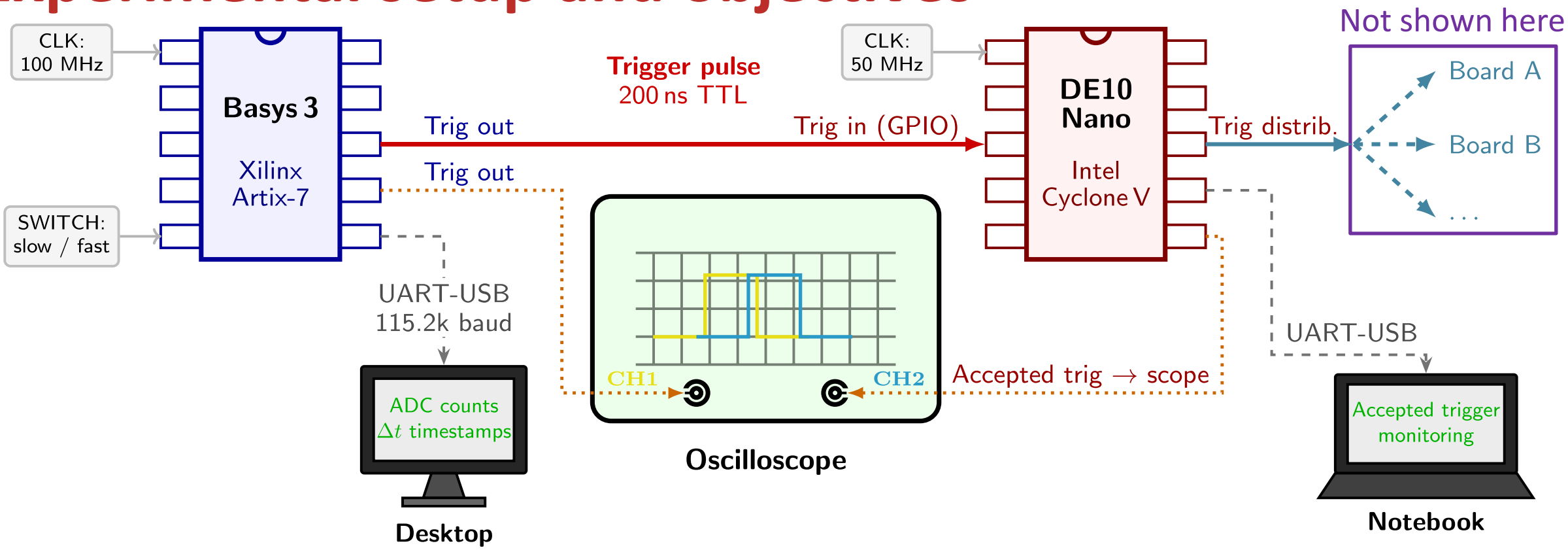

In this project: build an **FPGA-based emulator** to reproduce a **detector digitized signal** and to develop the **trigger/busy logic** and its **distribution**

Legend

- Trigger (TTL 200 ns)
- Distributed triggers
- Oscilloscope probe
- UART-USB

Experimental setup and objectives

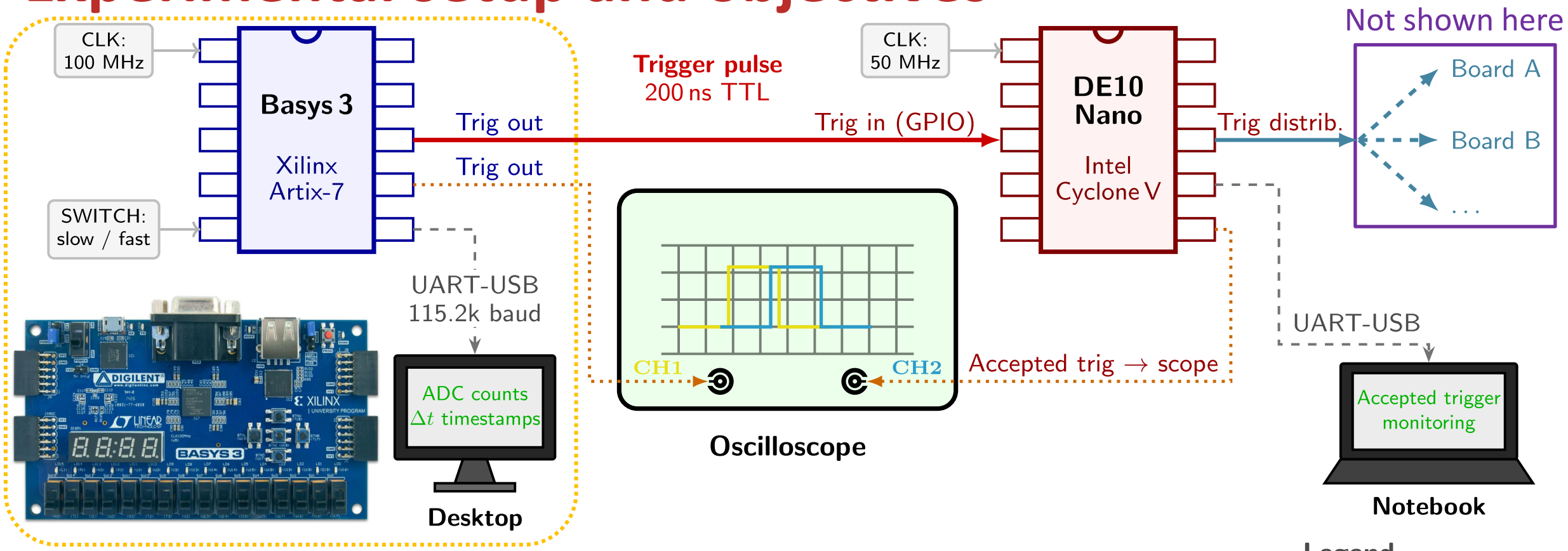

In this project: build an **FPGA-based emulator** to reproduce a **detector digitized signal** and to develop the **trigger/busy logic** and its **distribution**

Legend

- Trigger (TTL 200 ns)
- Distributed triggers
- Oscilloscope probe
- UART-USB

Experimental setup and objectives

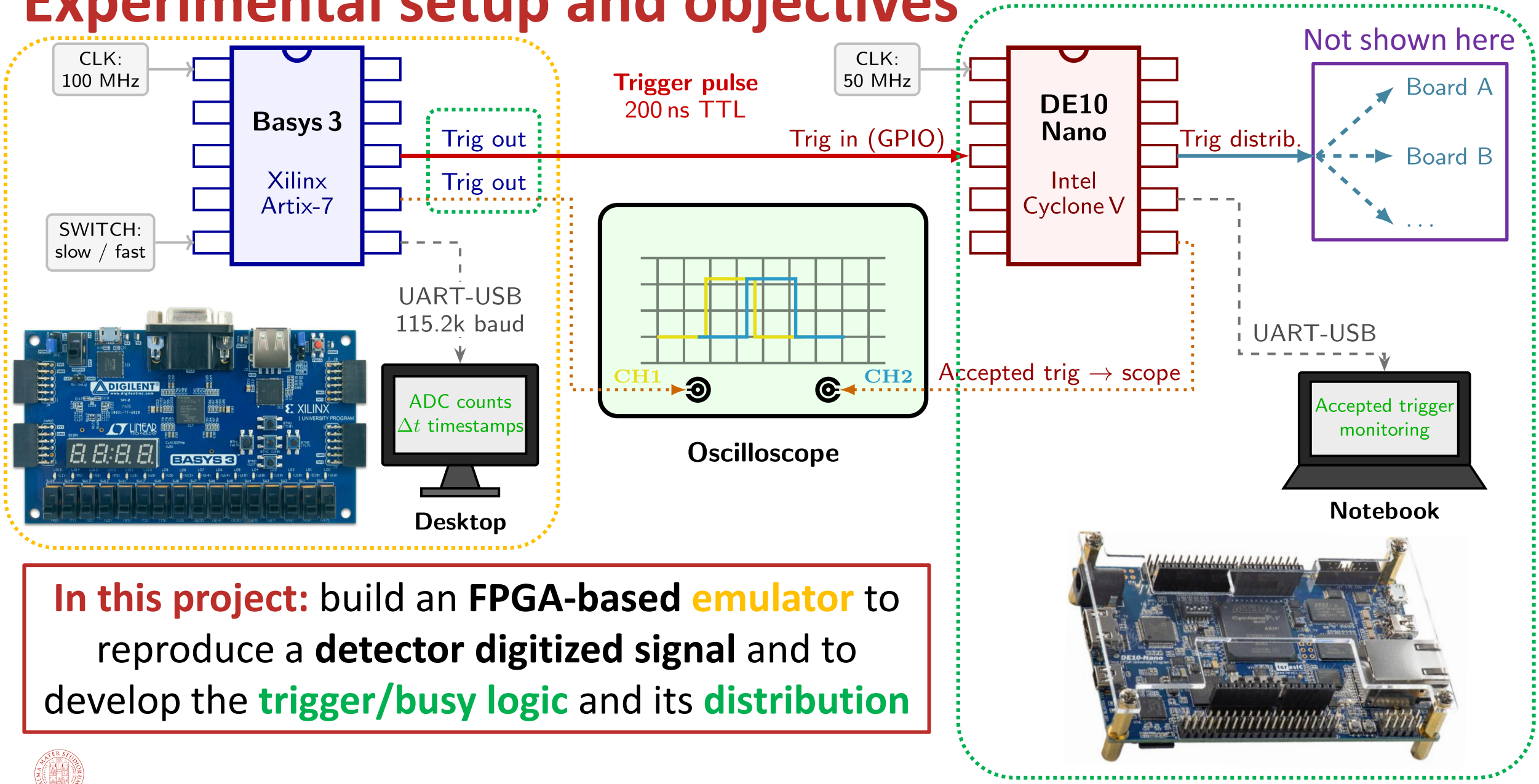

In this project: build an **FPGA-based emulator** to reproduce a **detector digitized signal** and to develop the **trigger/busy logic** and its **distribution**

Experimental setup and objectives

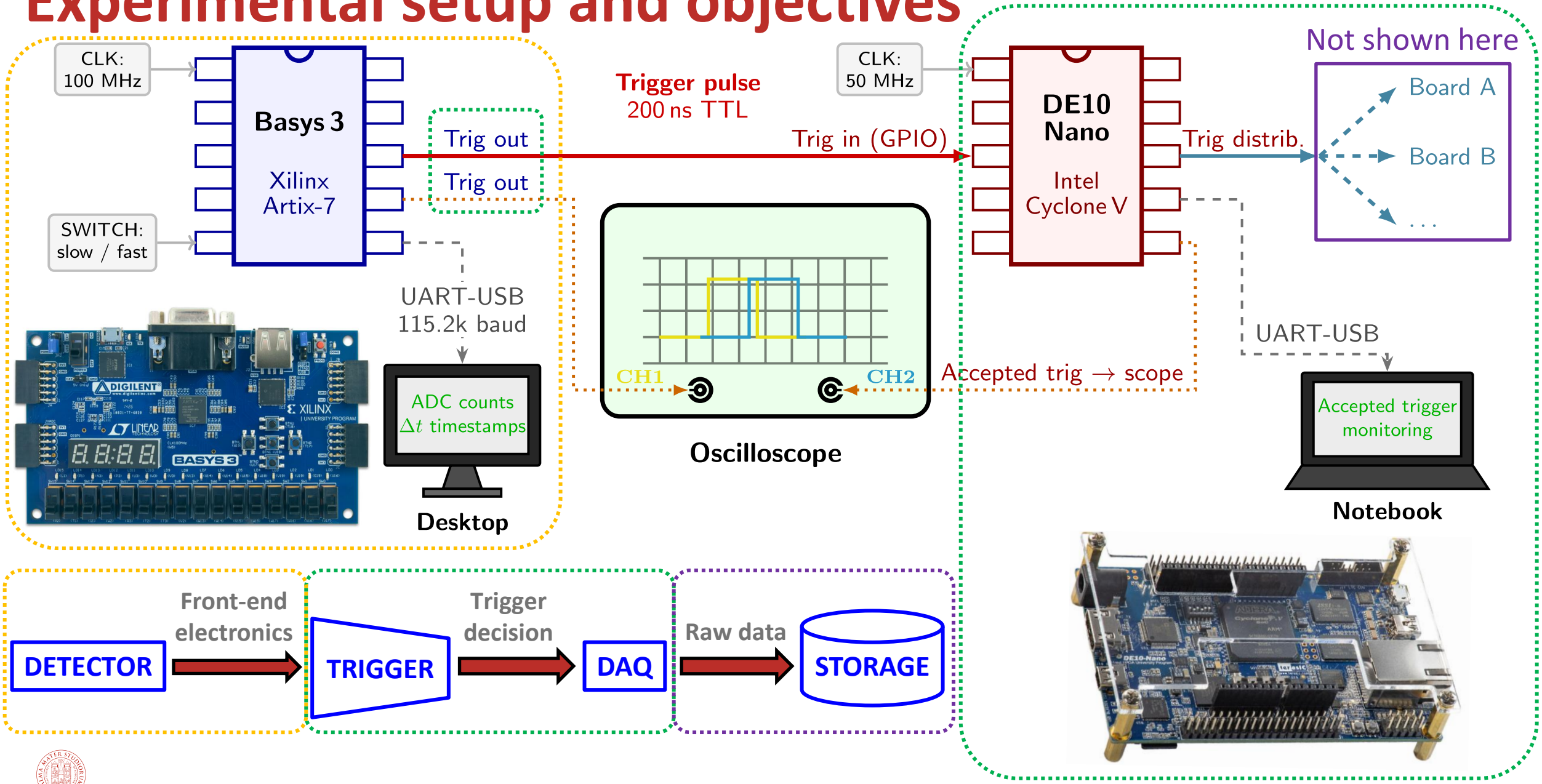

Basys 3: the detector emulator

- Basys 3 board emulates the detector output → Generates:
  1. **Digitized pulses** (in **ADC counts**)

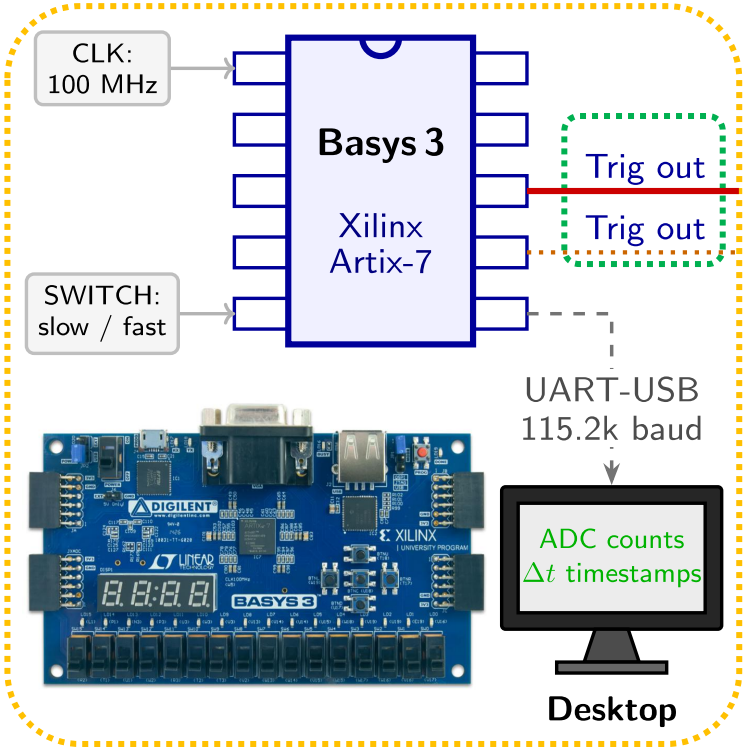

Basys 3: random number generation

- Basys 3 board emulates the detector output → Generates:
  1. **Digitized pulses** (in **ADC counts**)

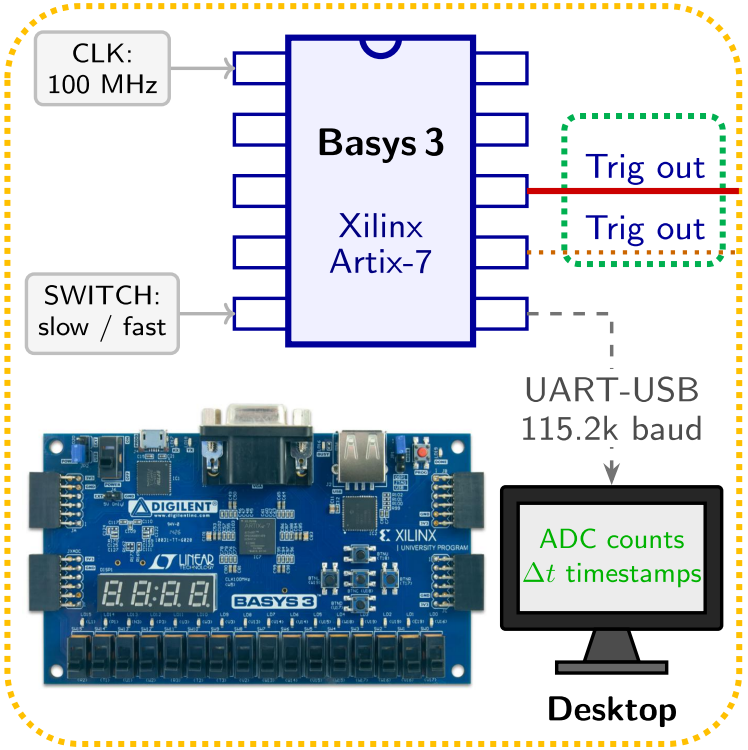

- Built a ***Fibonacci*** **LSFR** (Linear Feedback Shift Register) for **pseudo-random number generation**. E.g.: 16-bit

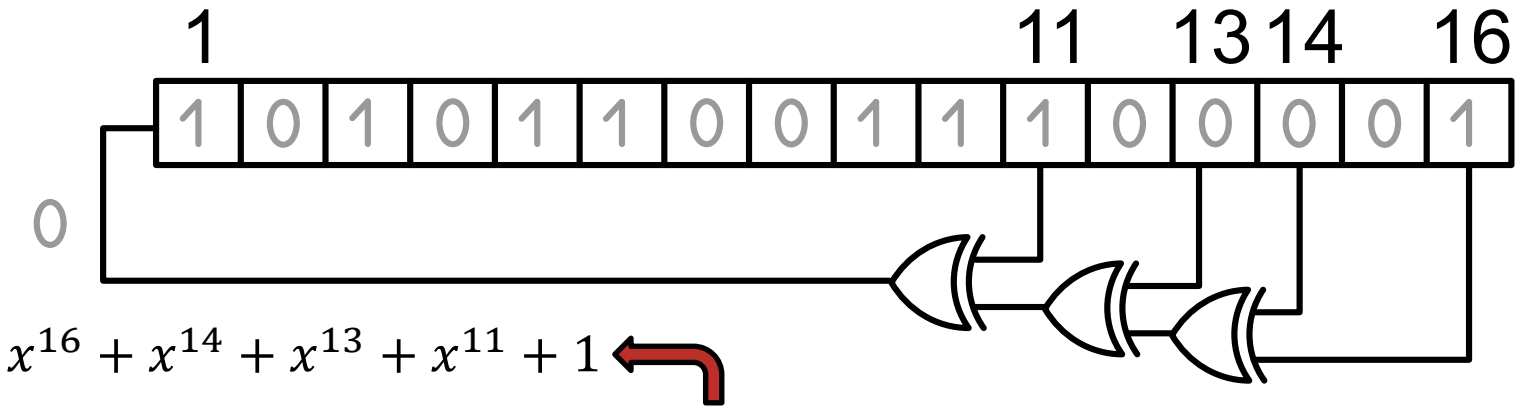

$x^{16} + x^{14} + x^{13} + x^{11} + 1$

- **Galois primitive polynomial** ensures that the circuit cycles through every possible state $\in [0, 2^{16} - 1]$ randomly → maximum-length LSFR

$$(15\ downto\ 0) \rightarrow (14\ downto\ 0)\ \&\ (11\ \mathbf{XOR}\ 13\ \mathbf{XOR}\ 14\ \mathbf{XOR}\ 16)$$

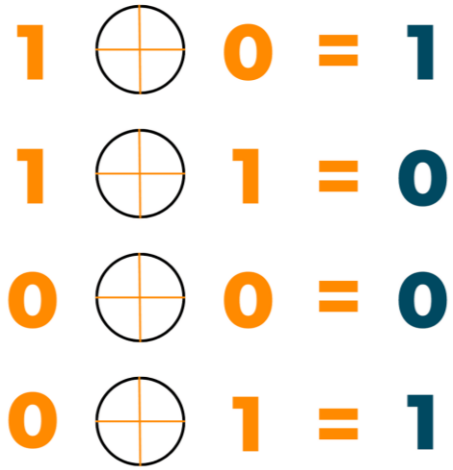

XOR truth table

Basys 3: random number generation

- Basys 3 board emulates the detector output → Generates:
  1. **Digitized pulses** (in **ADC counts**)

- **24-bit LSFR**: each clock cycle (10 ns @ 100 MHz) generate a new pseudo-random number ∈ [0,16 777 215]

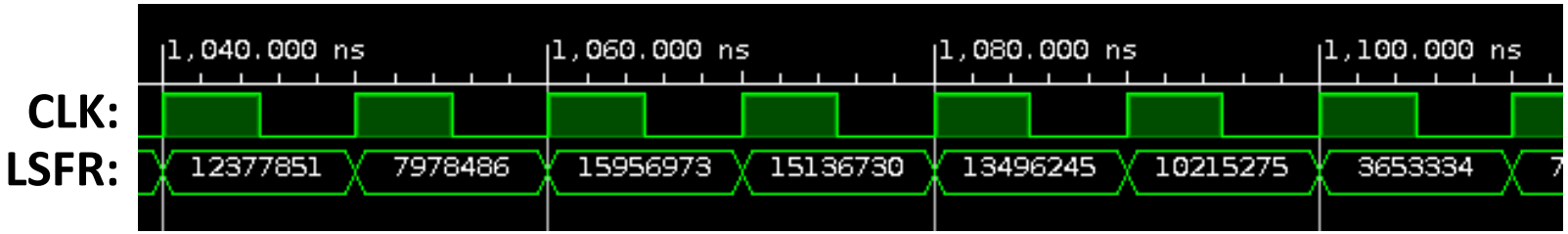

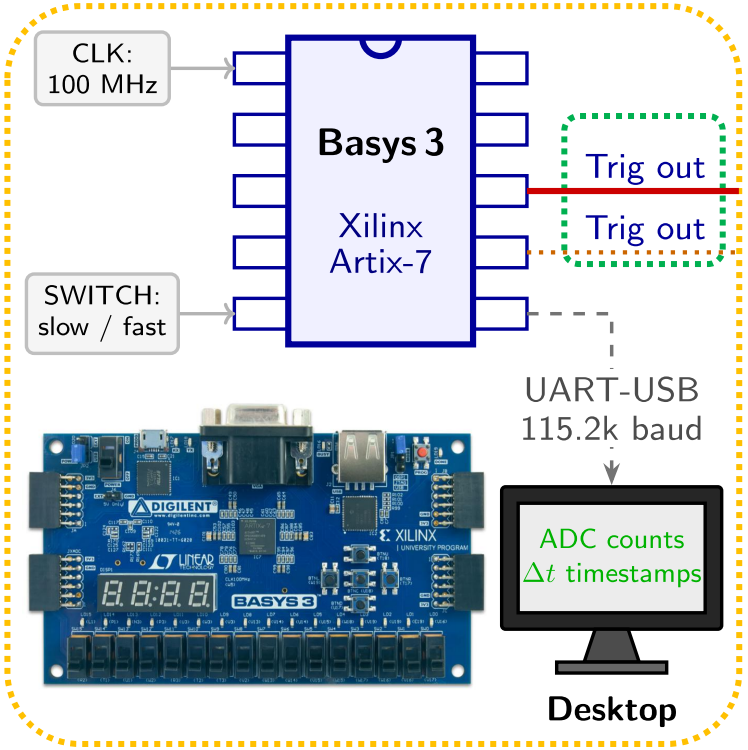

- Used to **reproduce** the **event statistics** and **randomness**
  1. **Electronic noise**
  2. **Pulse maximum, width…**
  3. **Rate**

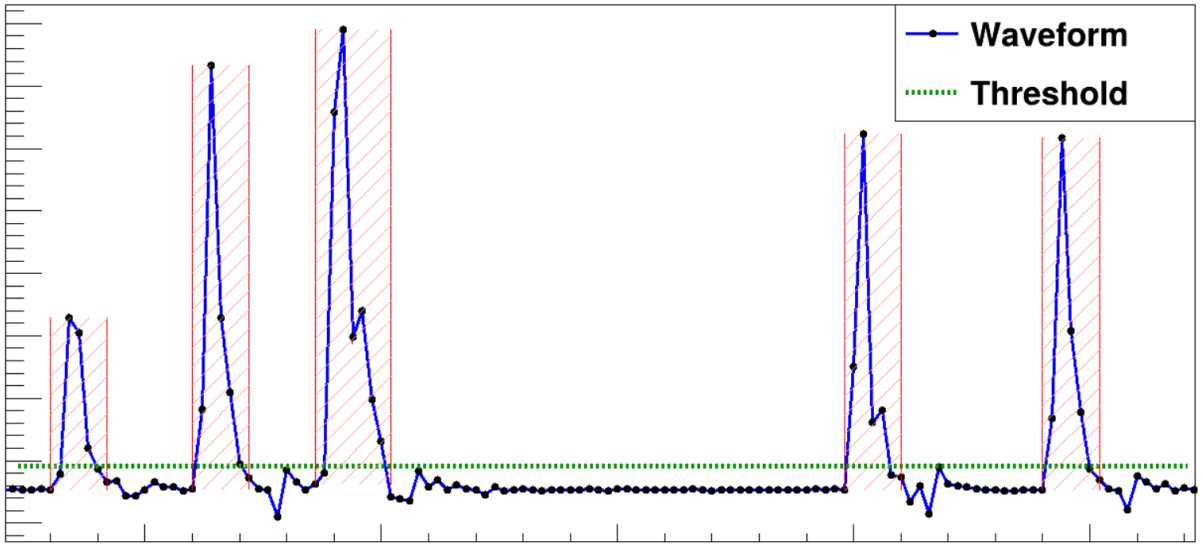

Basys 3: pulse generation

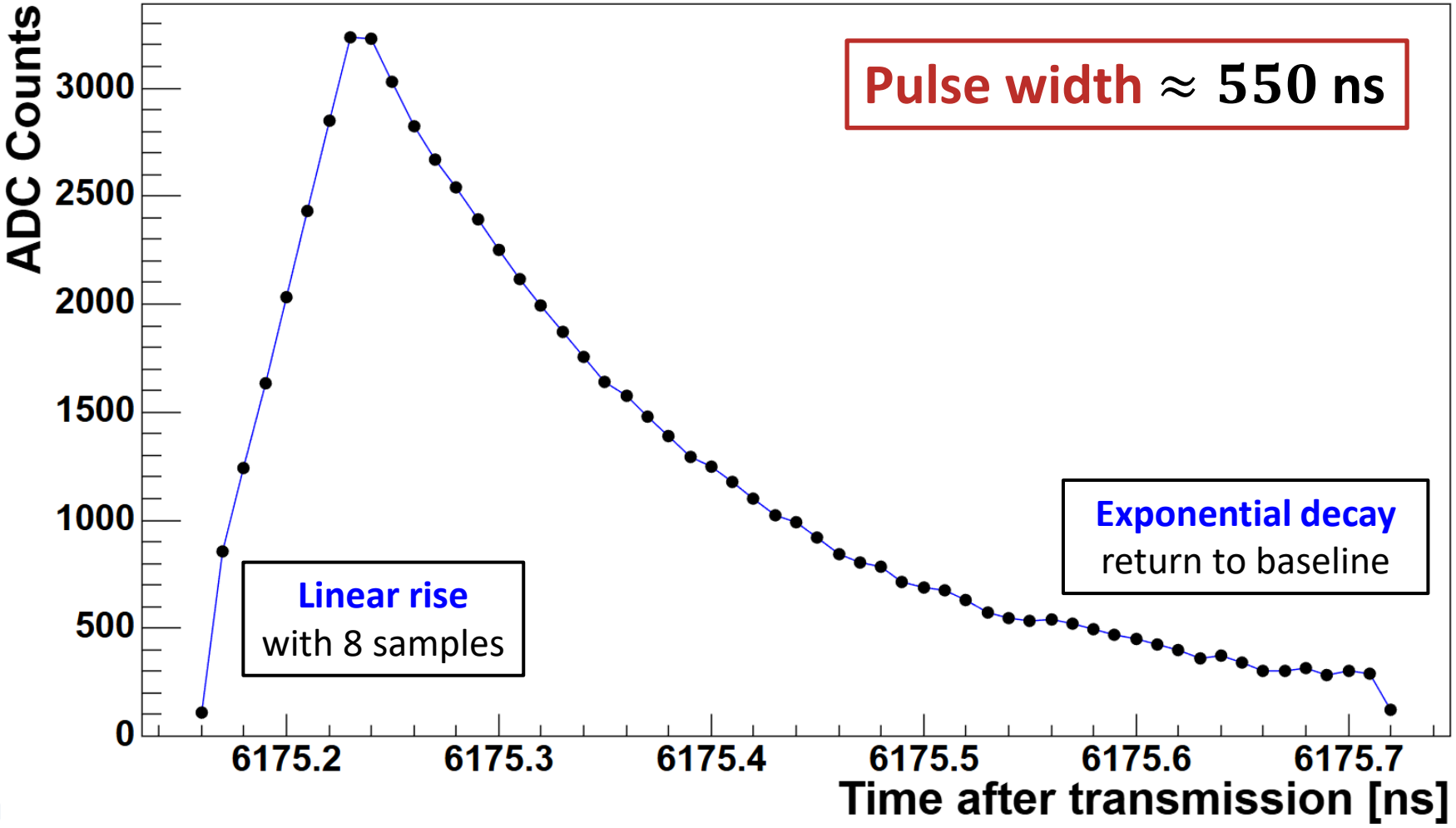

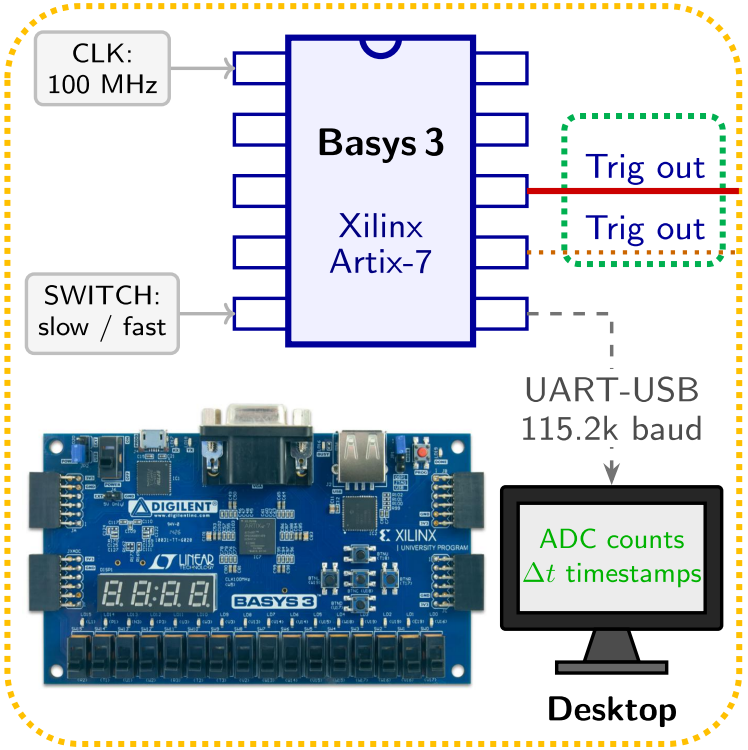

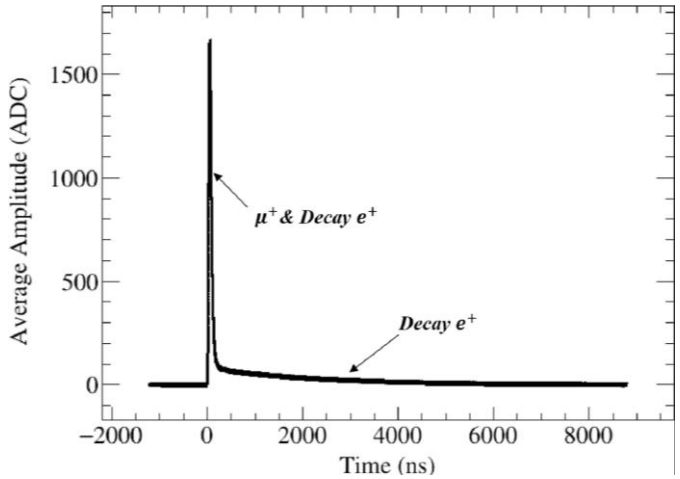

Basys 3: waveform generation

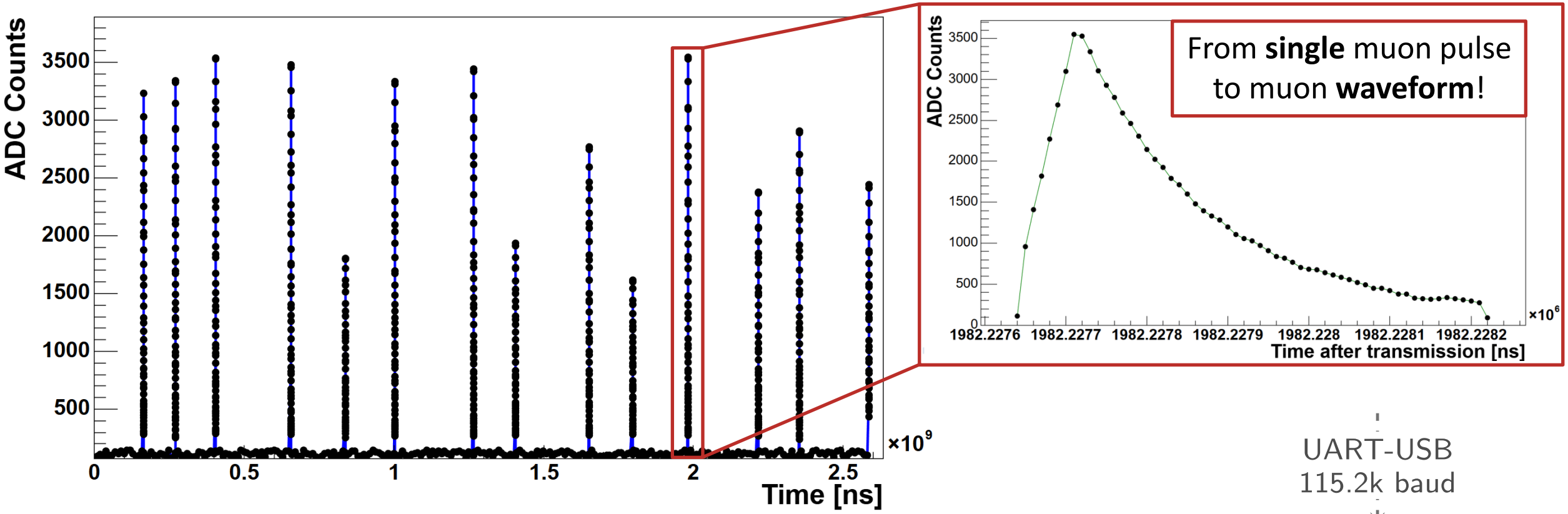

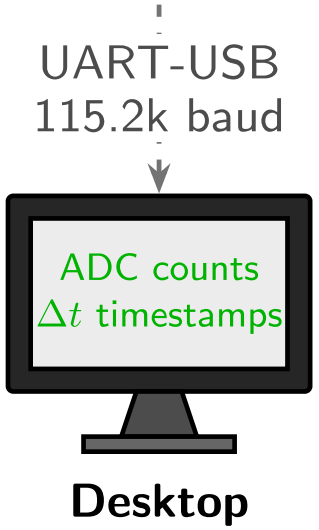

ADC COUNTS AND TIMESTAMPS SENT TO DESKTOP → HOW?

Basys 3: data throughput

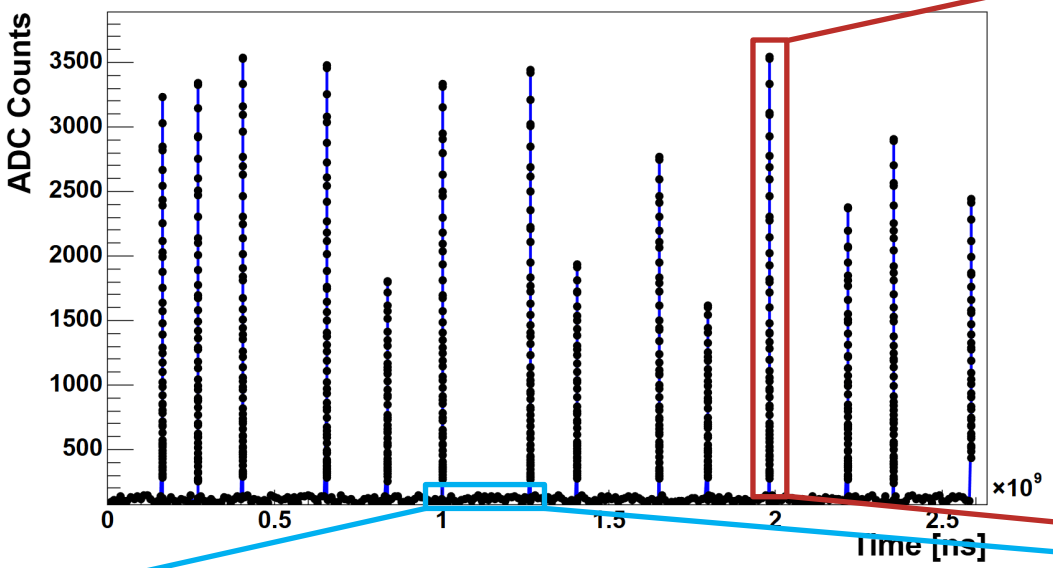

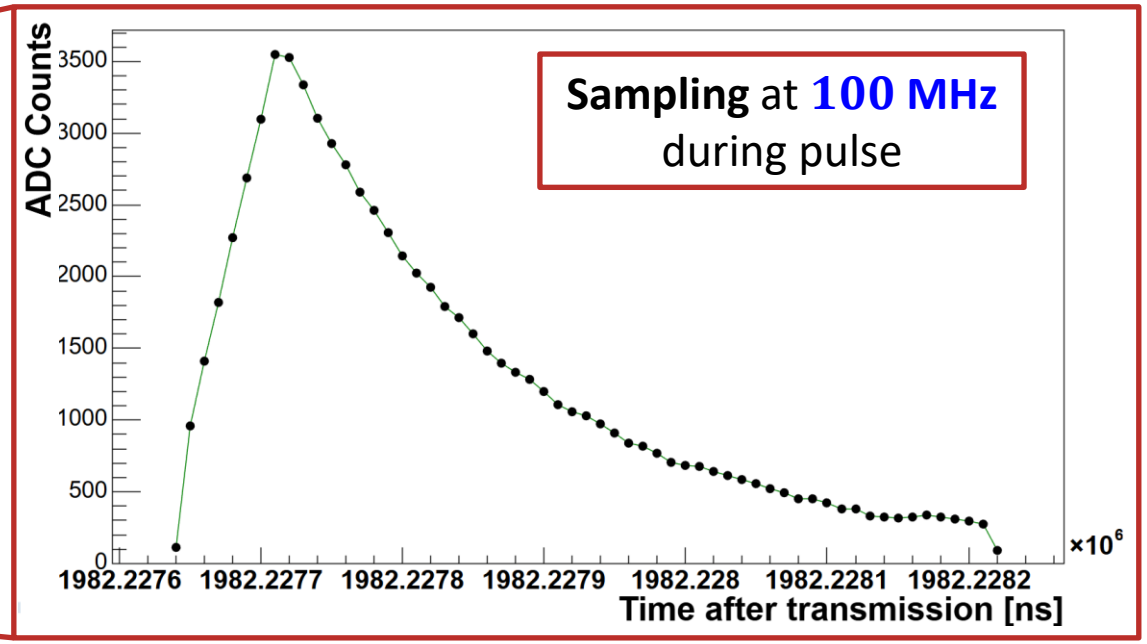

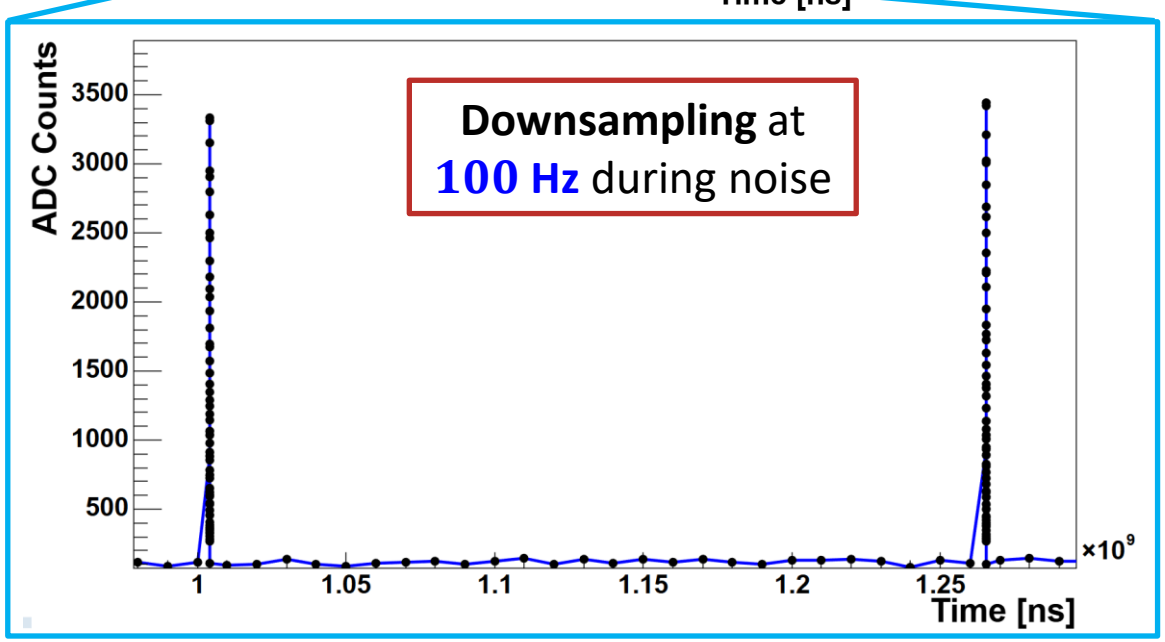

- Sampling challenge: UART-USB is a bottleneck maxing out at **11.5 kB/s**
  → impossible to stream **100 MHz**

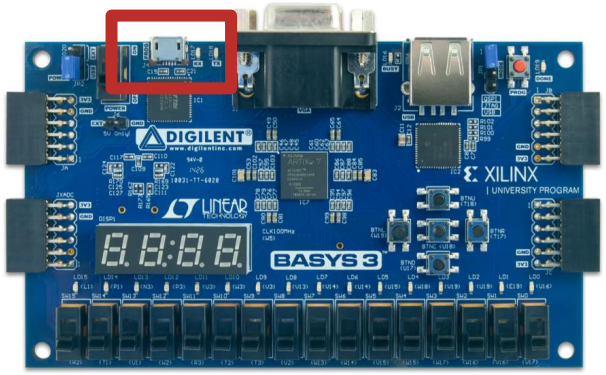

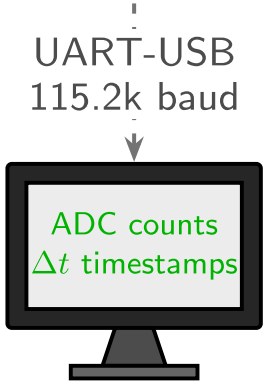

Basys 3: superimposing pulses

- By superimposing pulses, we observe the **statistical occupancy** of our predefined **parameter space**

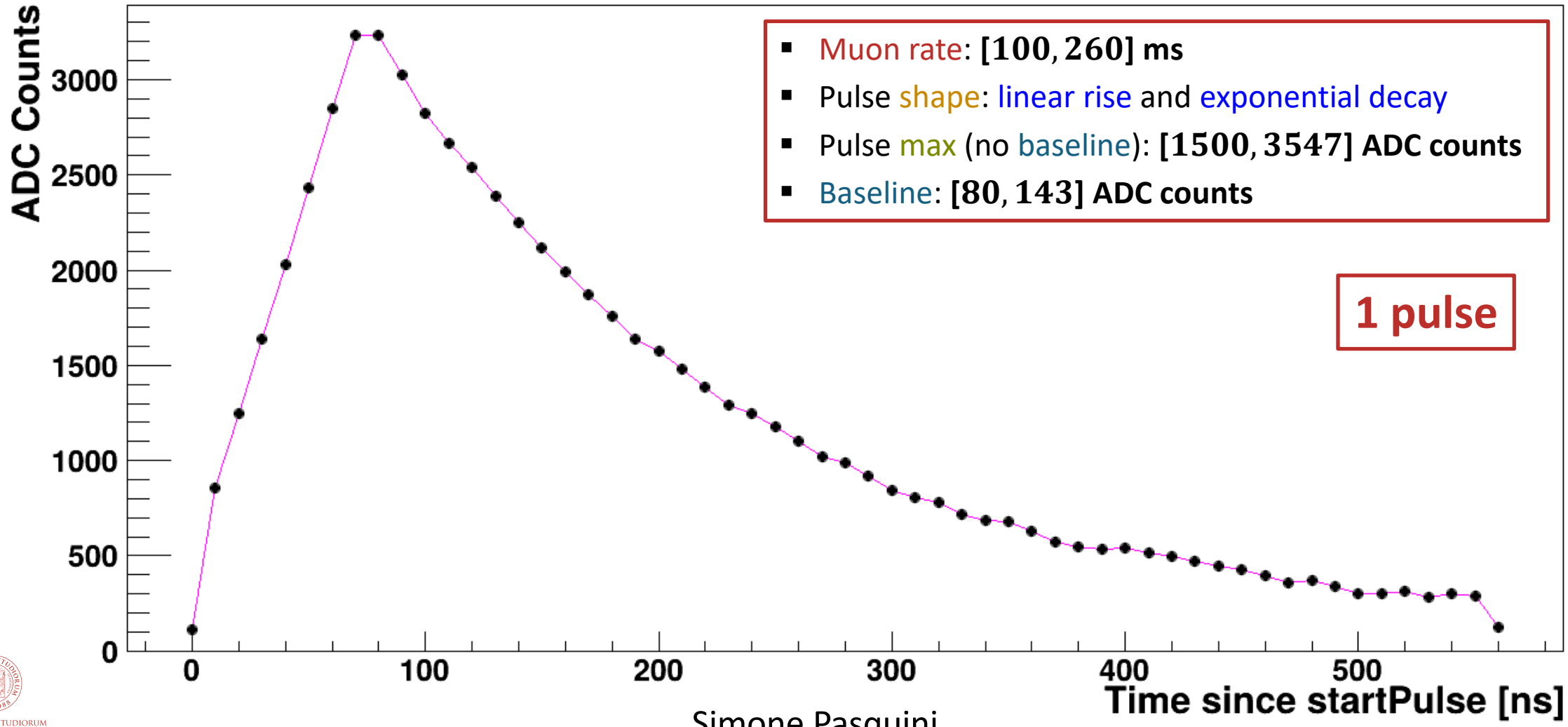

Basys 3: superimposing pulses

- By superimposing pulses, we observe the **statistical occupancy** of our predefined **parameter space**

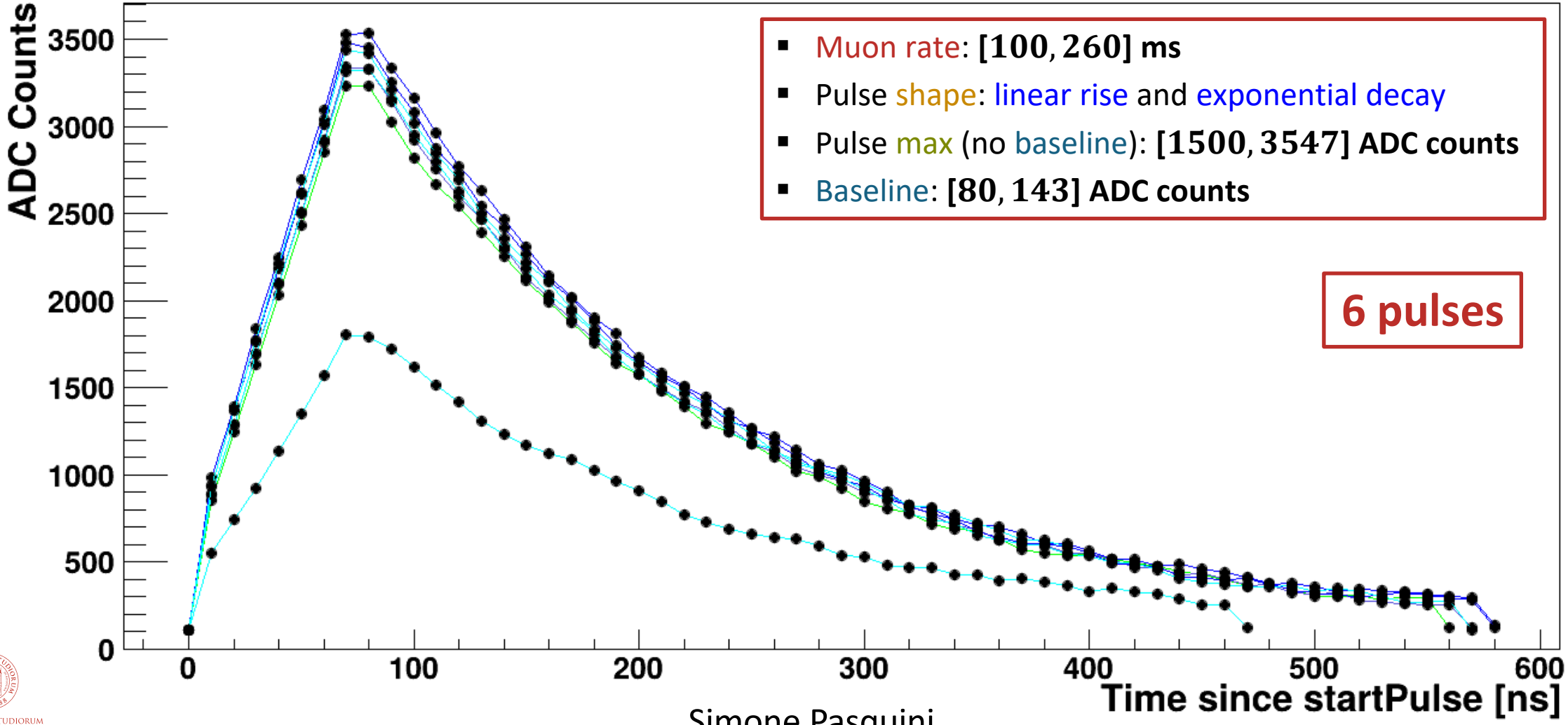

Basys 3: superimposing pulses

- By superimposing pulses, we observe the **statistical occupancy** of our predefined **parameter space**

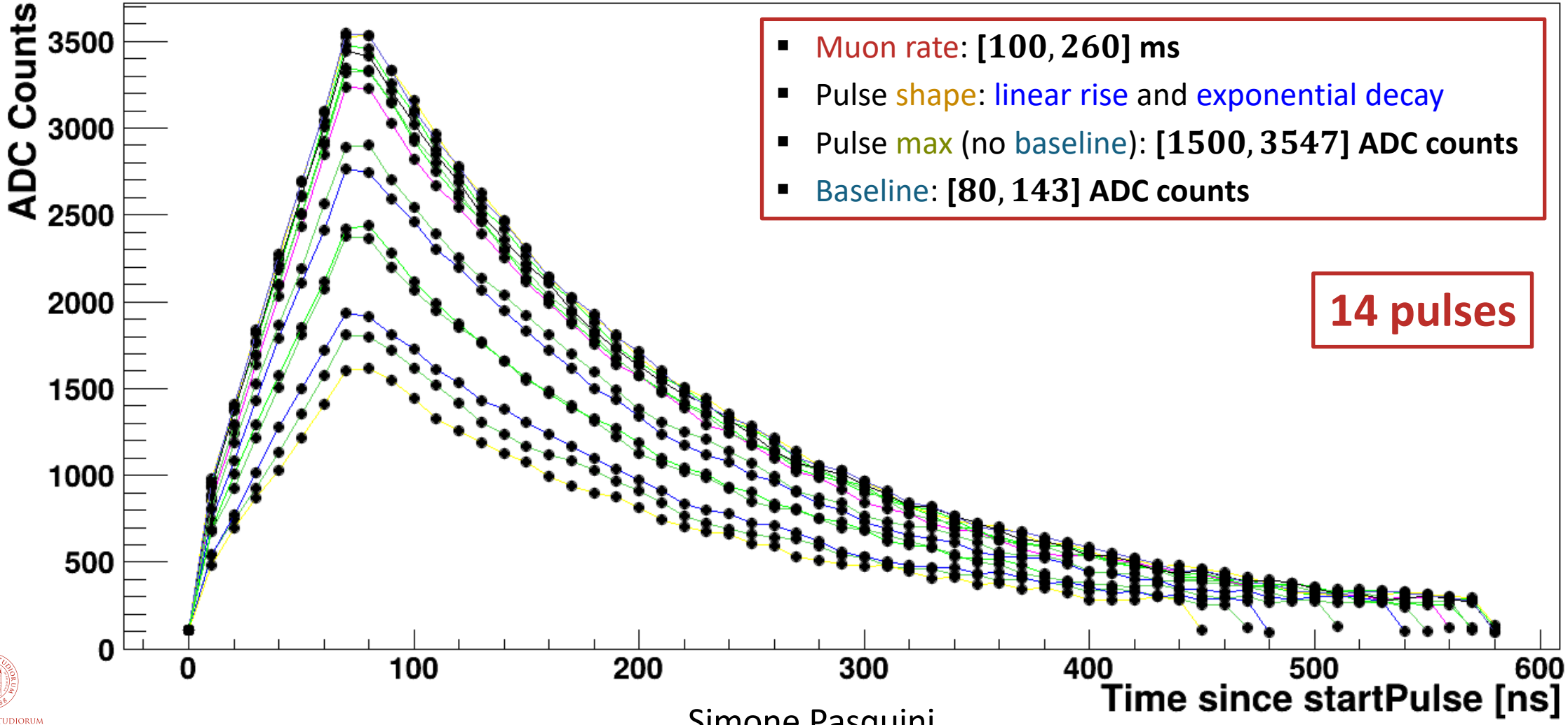

Basys 3: superimposing pulses

- By superimposing pulses, we observe the **statistical occupancy** of our predefined **parameter space**

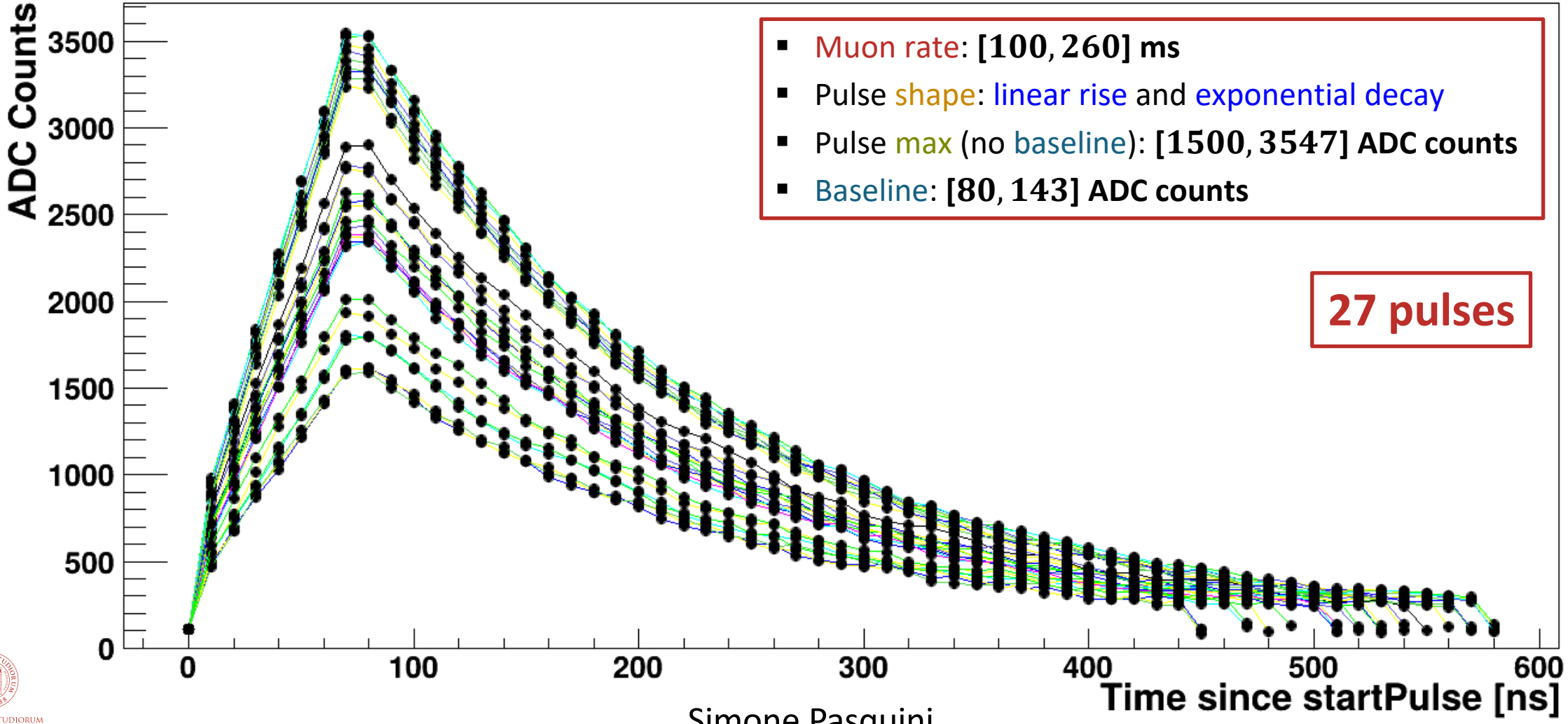

Basys 3: summing pulses

- Summing pulses, we reconstruct an "average pulse" that **adheres to a Landau** distribution, the physical standard for energy loss inside detector

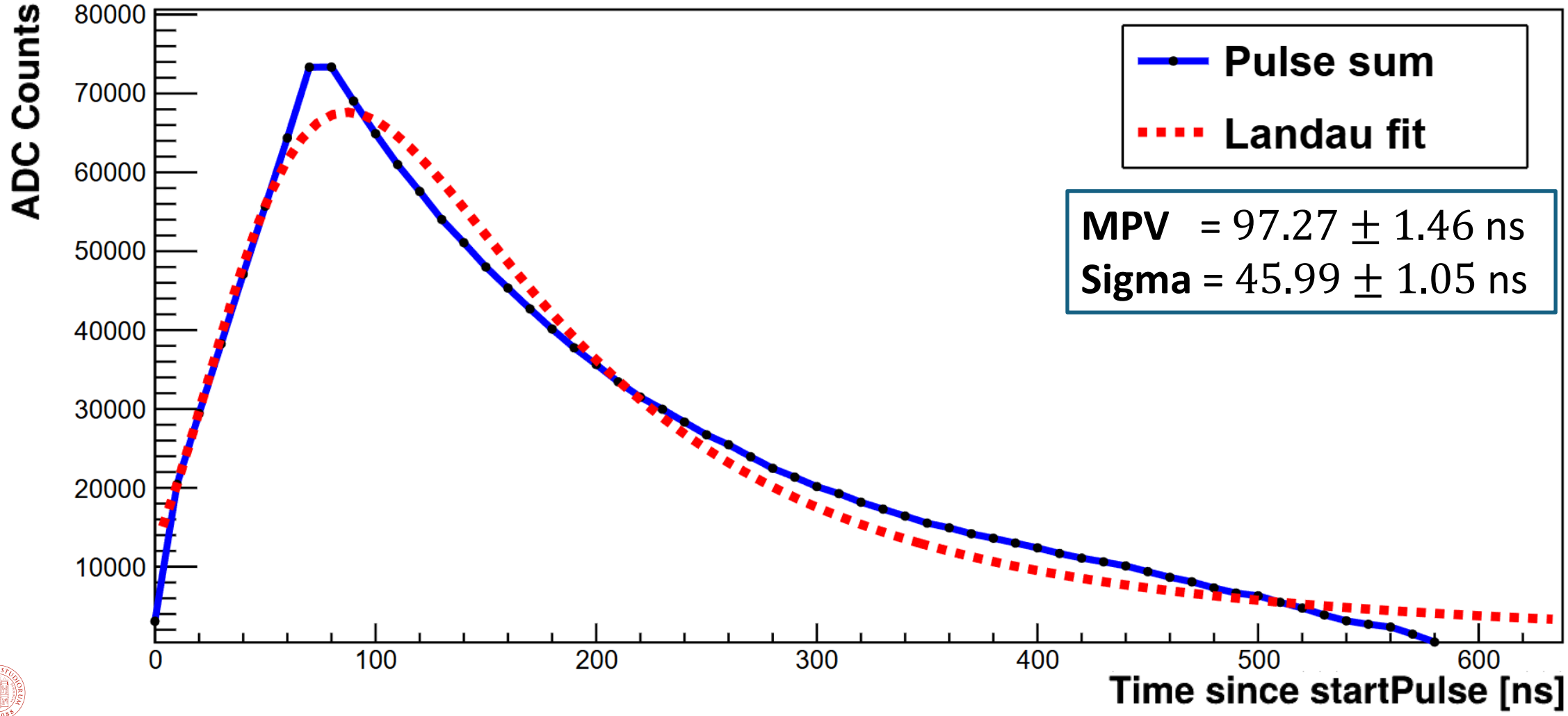

Basys 3: trigger output

- Basys 3 board emulates the detector output → Generates:
  1. **Digitized pulses** (in **ADC counts**)
  2. **Trigger decision logic**

- Convert muon pulse into a **3.3 V** TTL **square trigger** of **200 ns** to meet **DE10-Nano input requirements**

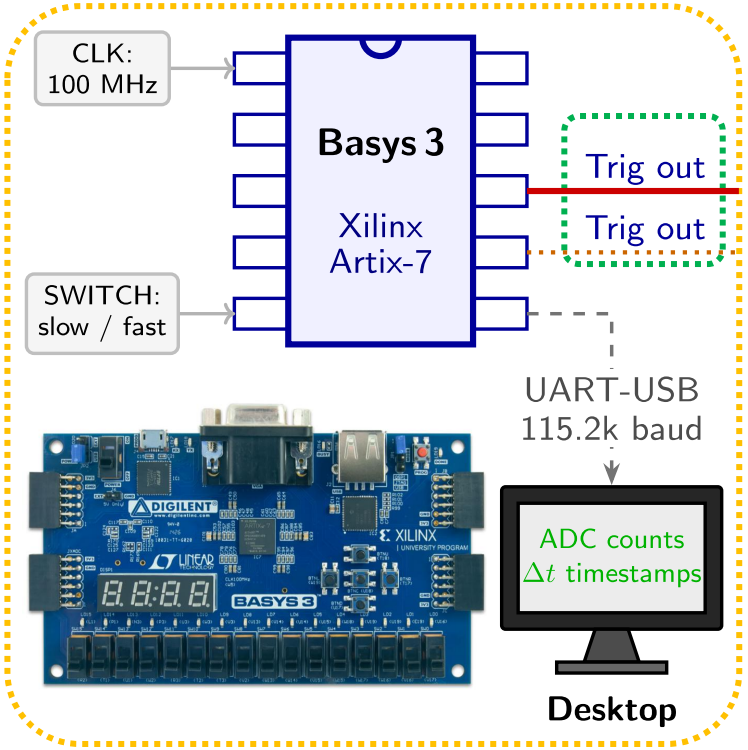

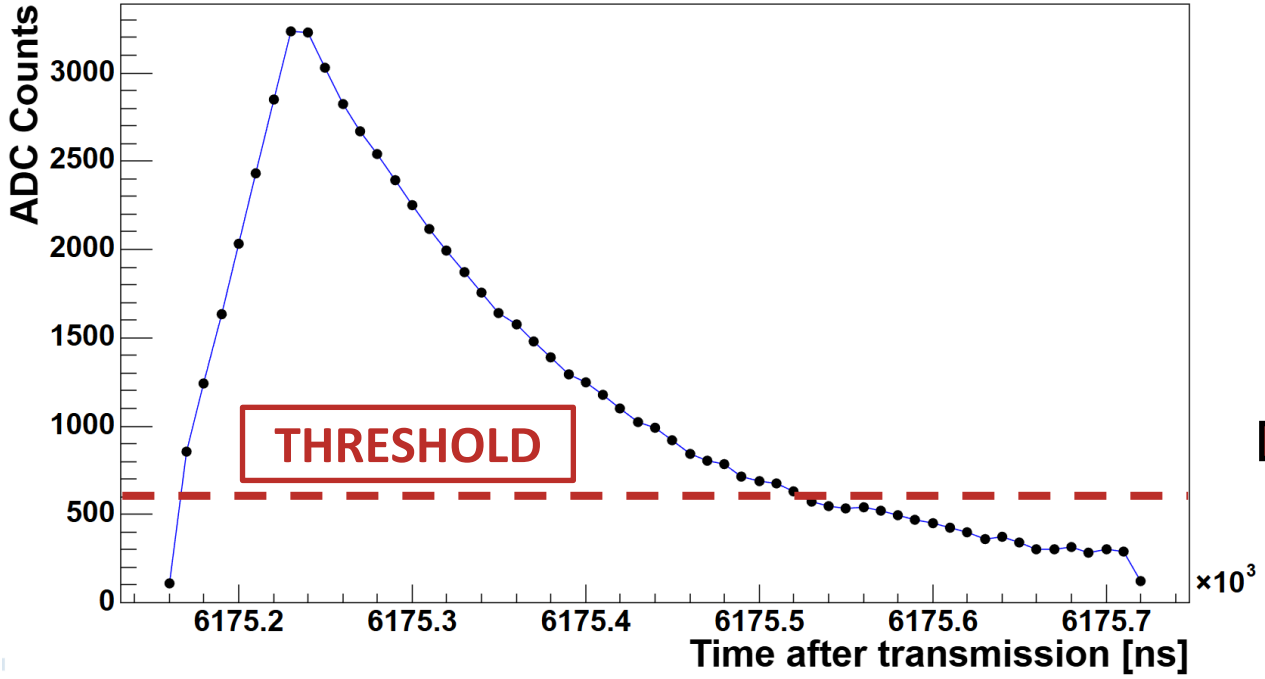

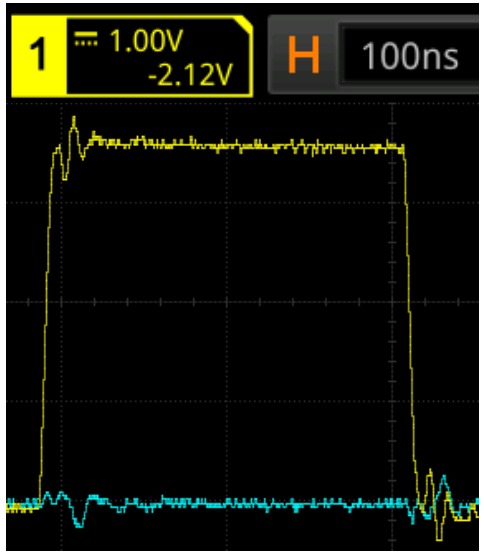

DE10-Nano: trigger distribution

- DE10-Nano board handles signal distribution and event management

- From a Basys 3 raw pulse to a **labelled, timestamped physics event**
- If trigger is accepted, it is associated a timestamp → **uniquely identifiable** in data stream
- **Trigger decision is distributed** to downstream DAQ **boards** via TTL and LVDS outputs
- **Every accepted muon event is counted**
- Critical part: **busy logic**

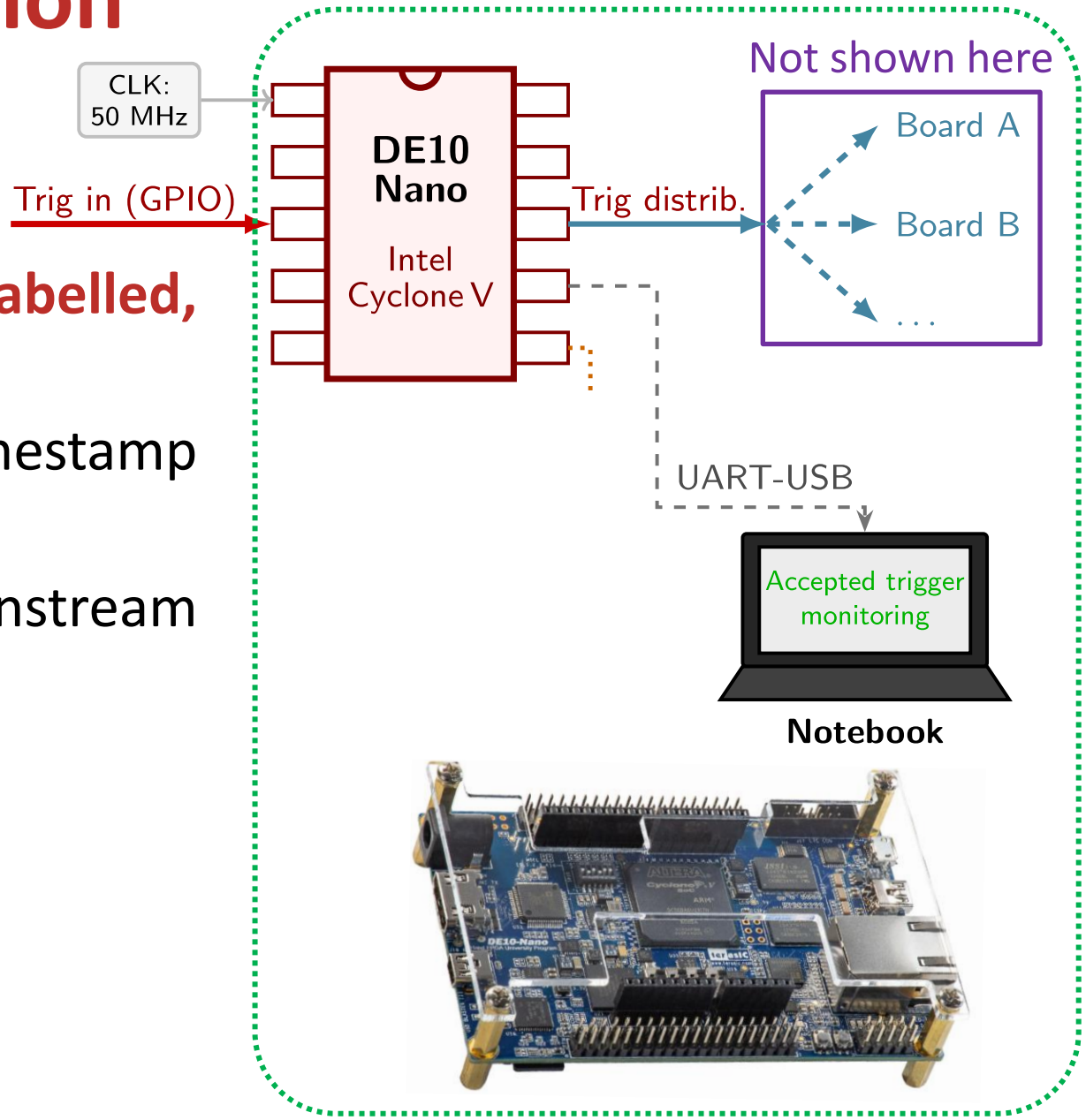

From slow mode to fast mode

- After DE10-Nano accepts a trigger, it enters in a **busy state** for 60 μs → deadtime → **incoming triggers are ignored**

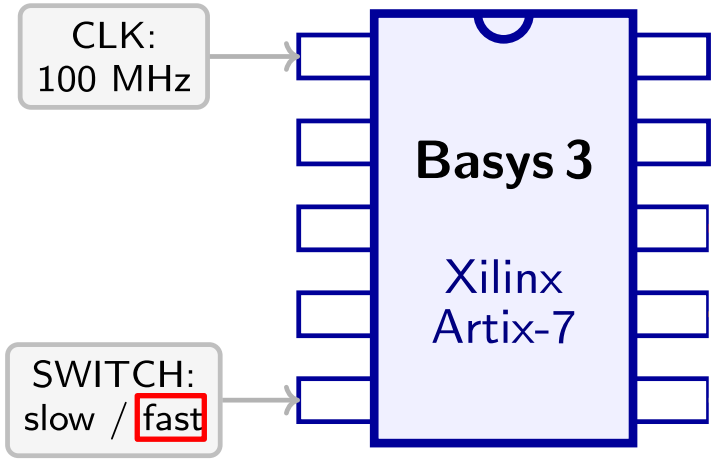

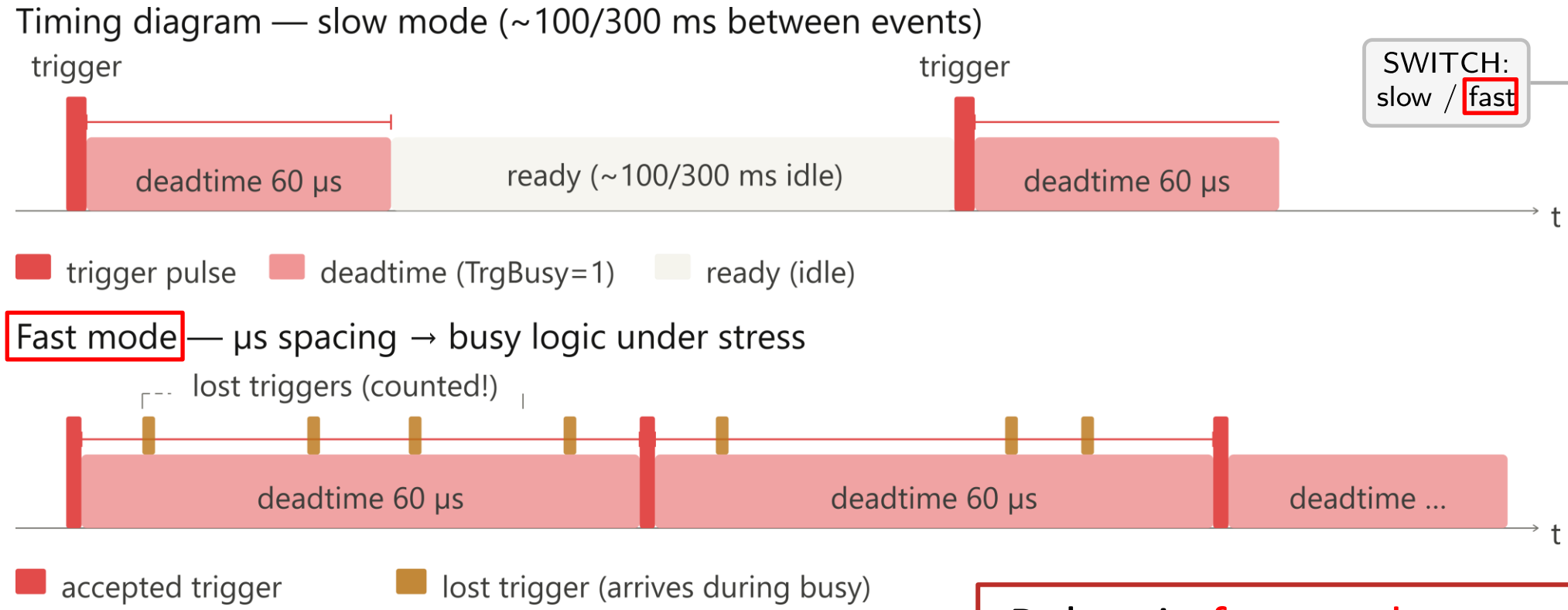

Pulses in fast mode: every $\approx [\mathbf{1}, \mathbf{80}]\ \boldsymbol{\mu s}$
→ on average $\approx \mathbf{40}\ \boldsymbol{\mu s} < \mathbf{60}\ \boldsymbol{\mu s}$!

Trigger measurements with oscilloscope

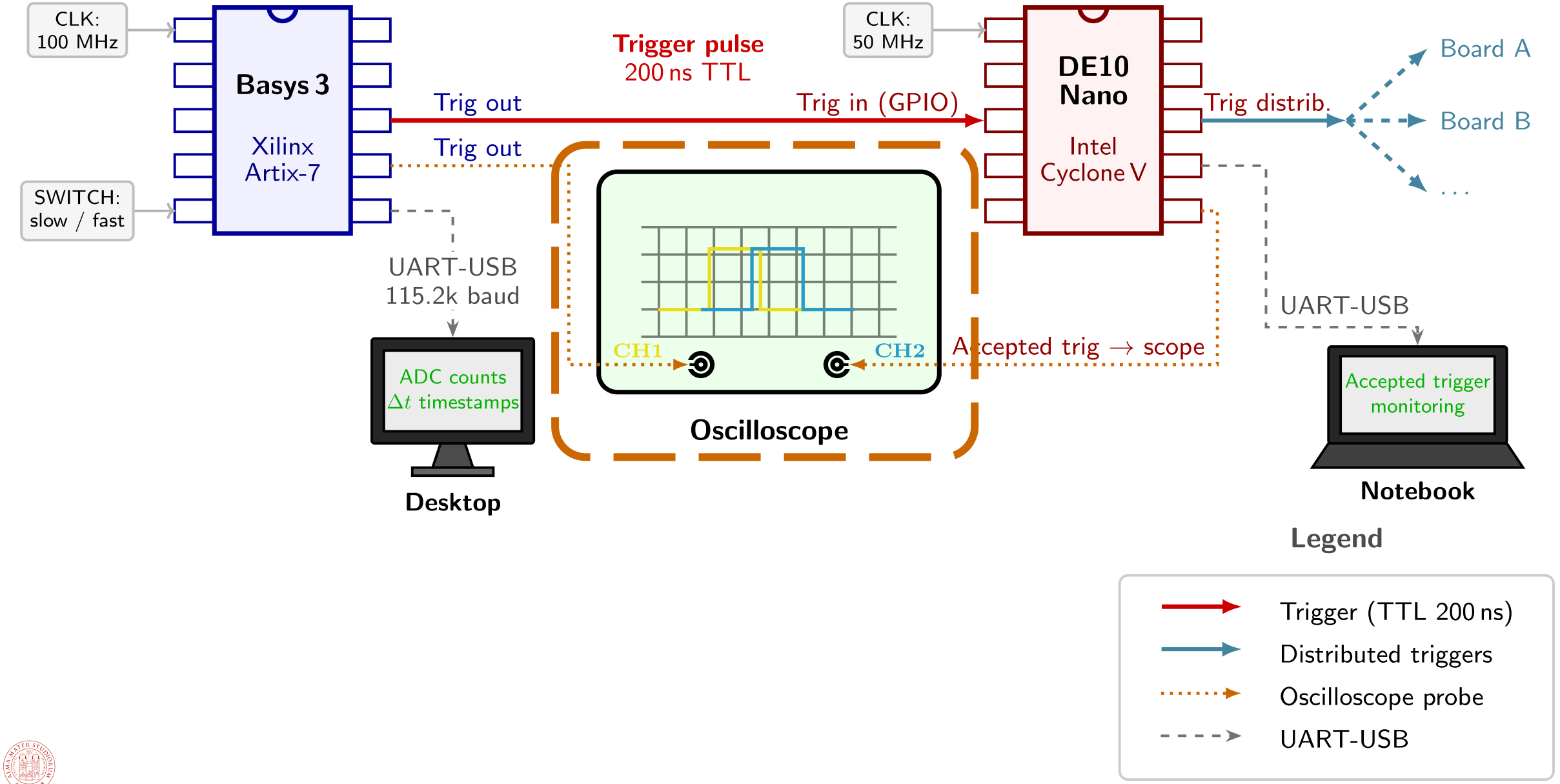

Trigger measurements with oscilloscope: slow mode

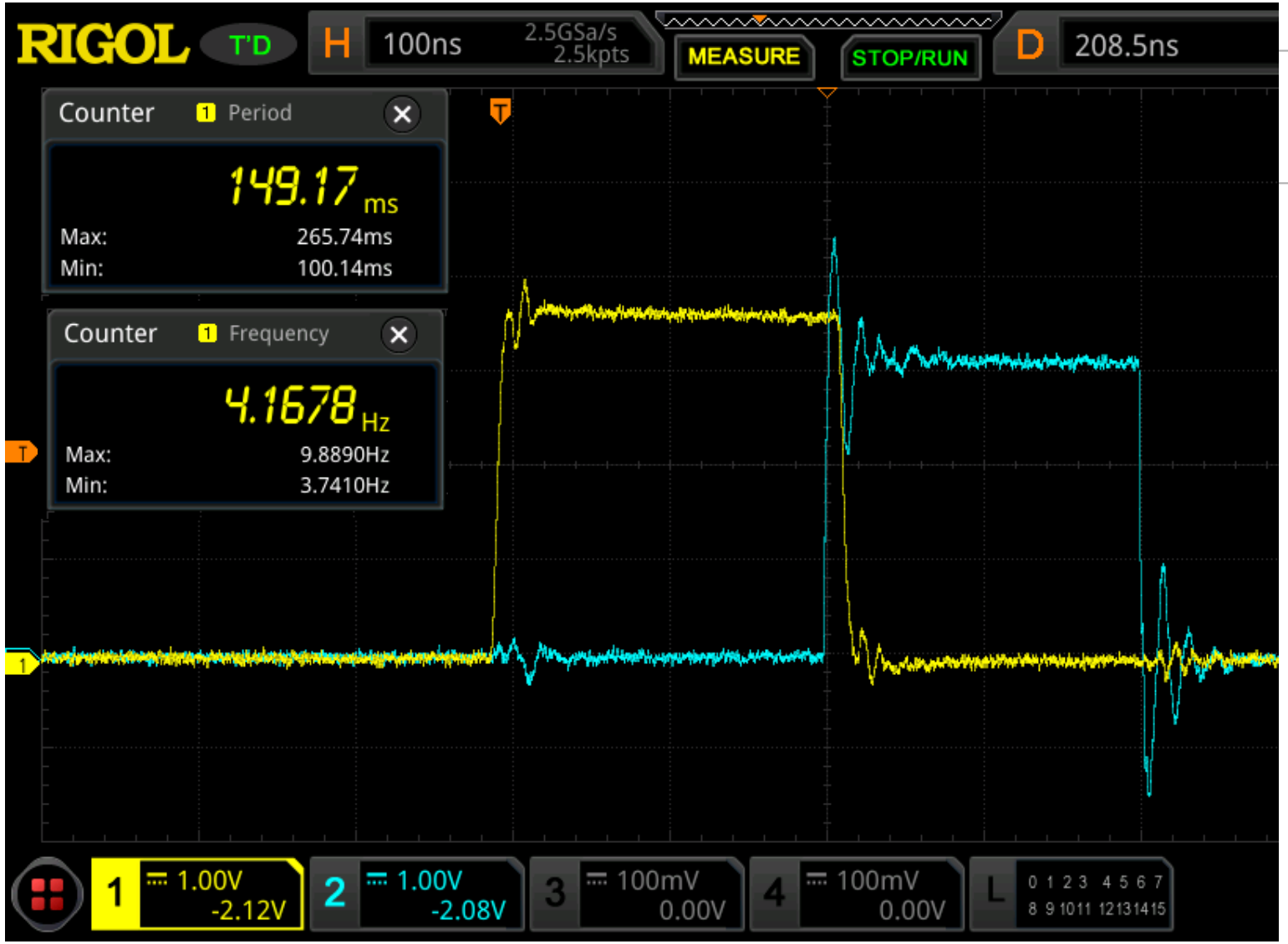

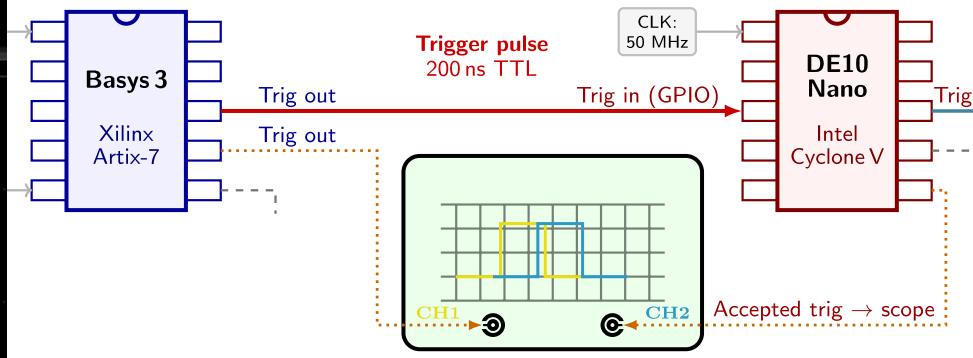

- Muon rate: every $[100, 260]$ ms
- Latency: ≈ 210 ns

Trigger measurements with oscilloscope: fast mode

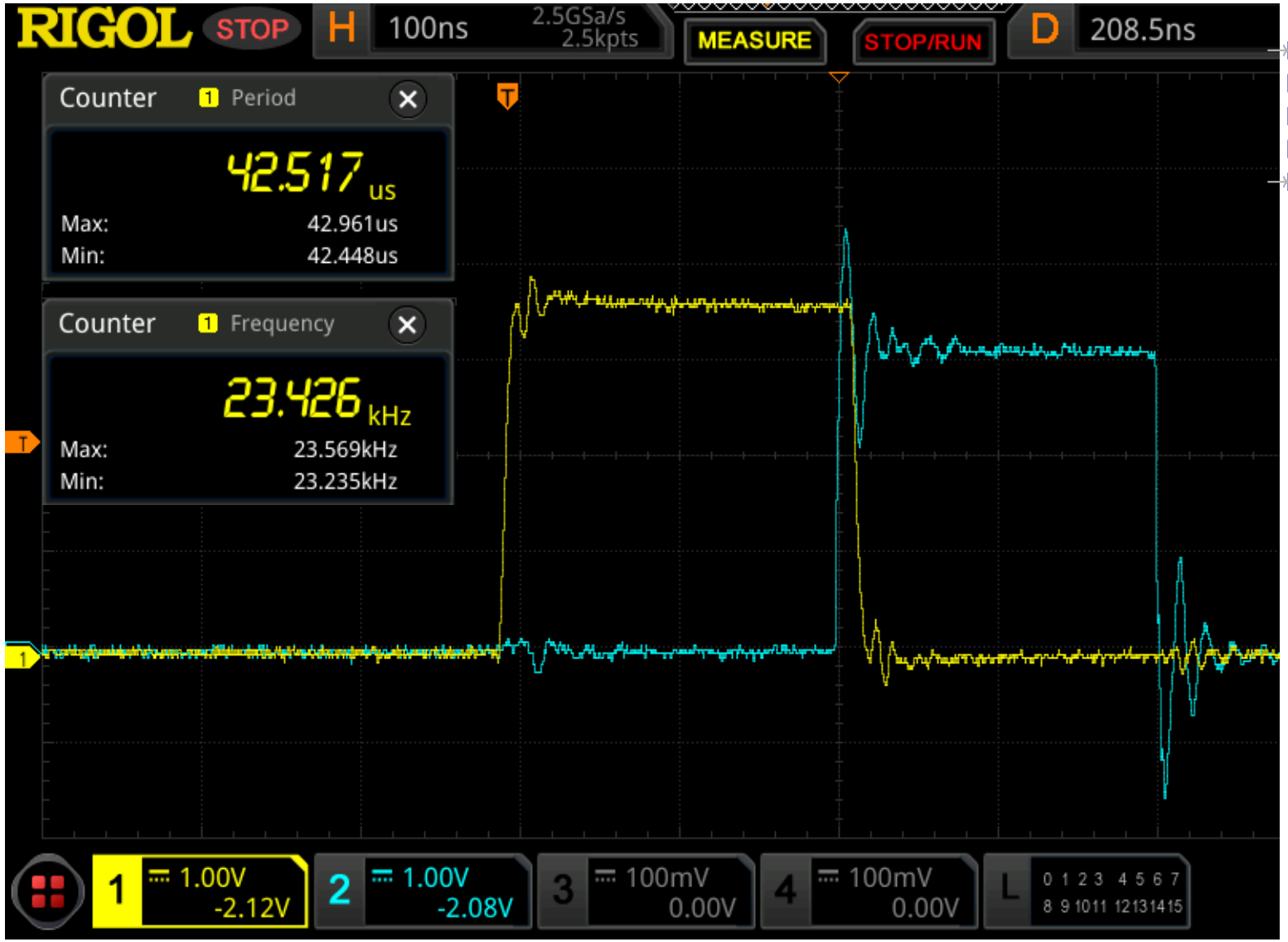

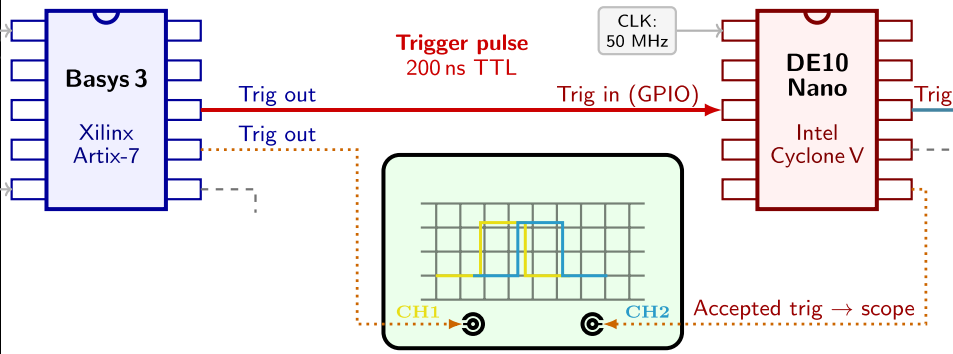

- Fast mode rate: every $[1, 80]\ \mu s$
- Latency: $\approx$ **210 ns**
- Busy logic: **works!**

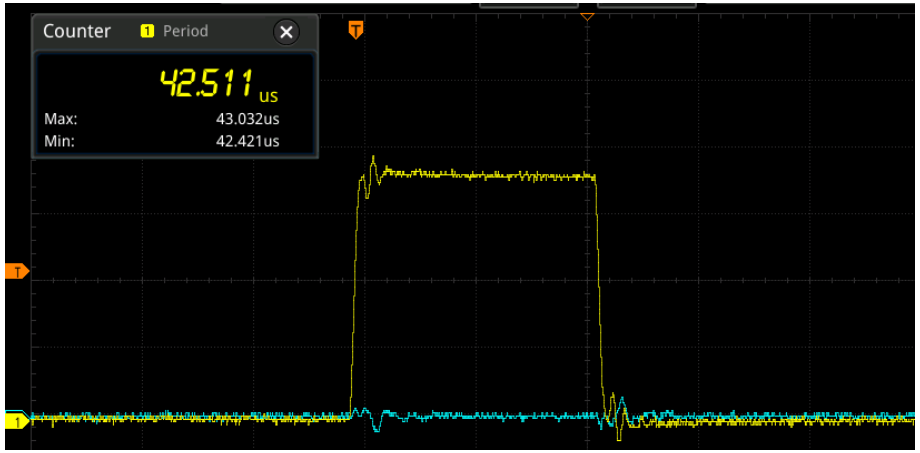

Conclusions

- **FPGA-based muon detection emulator** implemented using two boards:
  - **Basys 3 (Xilinx)**: generates random, digitized detector-like pulses
  - **DE10-Nano (Cyclone V)**: handles trigger logic, event labelling, timestamping and DAQ interface → **successfully tested with muon trigger**, including **busy logic** (validation through **fast mode** operation)
  - **Safe operational regime**: signal rate $\boldsymbol{R < 1/\tau_{busy} = 16.7}$ **kHz**
- System reproduces a $\mathbf{600}$ **cm²** sea-level muon detector:
  - Realistic **event rate** and **timing statistics**
- Same hardware can **emulate different experimental conditions**
  - **FPGA flexibility** allows **adaptation to different signal statistics and rate requirements for TDAQ system testing**

Thank you for your attention!

Backup

Basys 3: pulse generation

- Basys 3 board emulates the detector output → Generates:
  1. **Digitized pulses** (in **ADC counts**)

- To mimic the output of a pulse waveform after digitizer:
  - Expected muon rate ≈ **10 Hz** (every **100 ms**)
  - Muon pulse shape and pulse max
  - Electronic noise (baseline)

PHYSICS

- Muon rate: every **[100, 260] ms** → larger absorption in atmosphere for inclined muons ($\propto \cos^{[2,3]}\theta$)
- Pulse shape: **linear rise** and **exponential decay**
- Pulse max (no baseline): **[1500, 3547] ADC counts**
- Baseline: **[80, 143] ADC counts**

SIMULATION

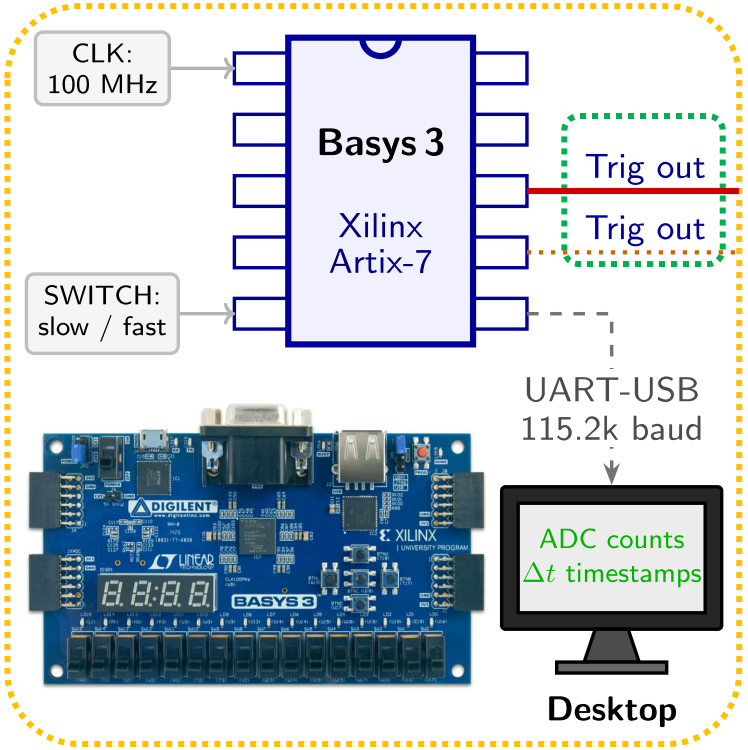

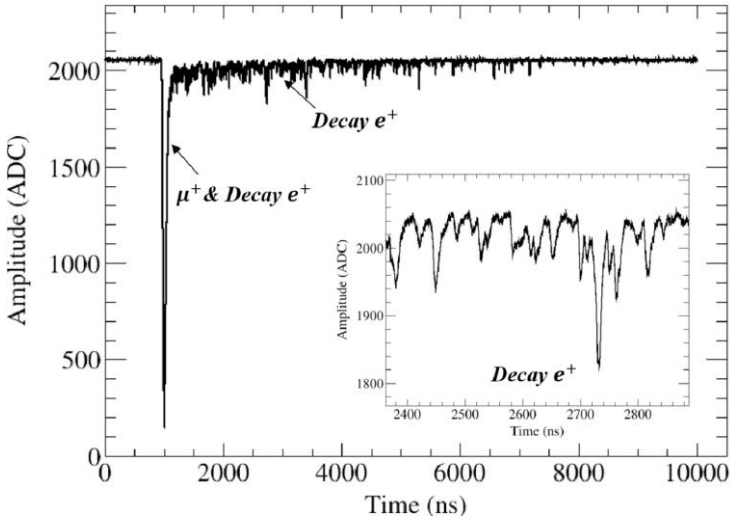

Basys 3: data throughput

- Sampling challenge: UART-USB is a bottleneck maxing out at **11.5 kB/s** → impossible to stream **100 MHz**
- **Mixed sampling**:
  - At **100 MHz** (**10 ns**) during a muon pulse to resolve fast dynamics
  - At **100 Hz** (**10 ms**) to monitor baseline noise
- To decouple **100 MHz** acquisition **from slow UART transmission**, a 32-bit x 1024-depth **FIFO** buffer is used
  - 32-bit data (**ADC + timestamps**) are readout every **20 μs** (**50 kHz**)

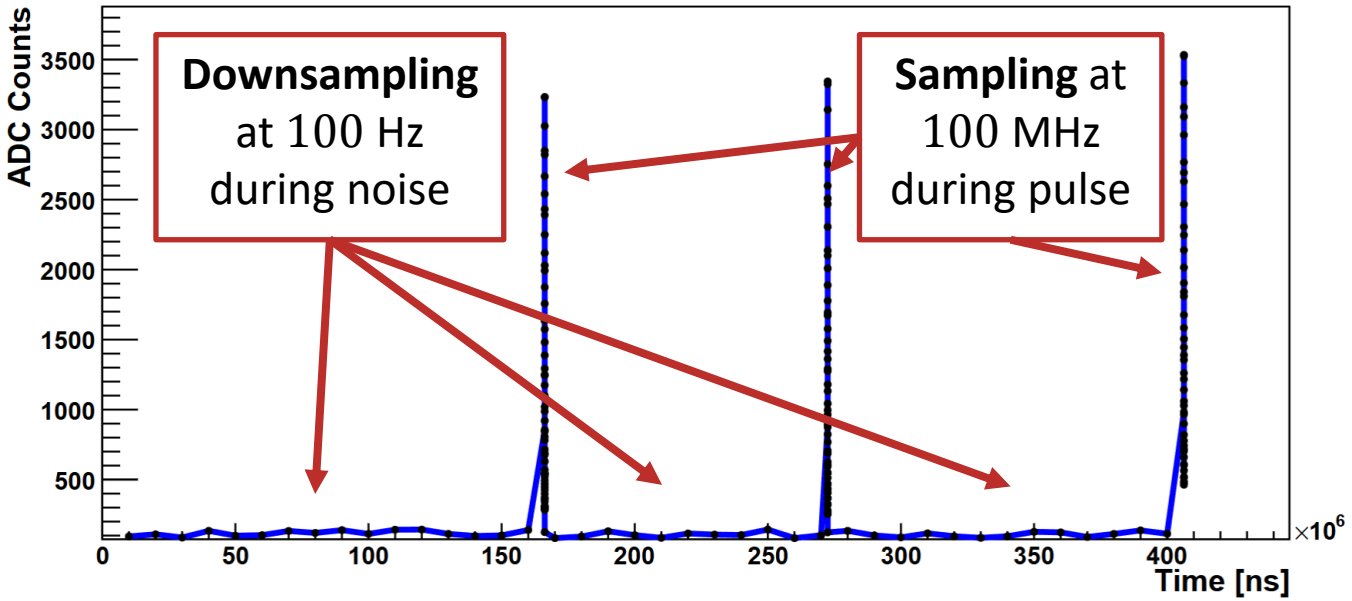

UART-USB
115.2k baud

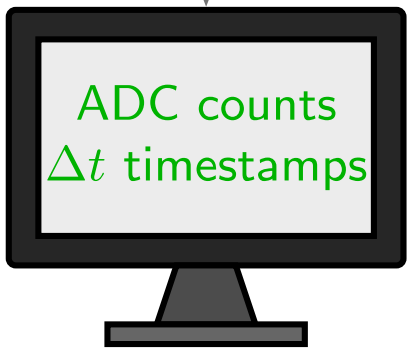

Desktop