DATE:	REVISION:	CREATED BY:	DESCRIPTION:	REVISION CODE:
2021/01/20	A0	AUTHOR	INITIAL RELEASE DESIGN	20210120_PROJECTS_IdealDiode_A0_00001
2021/02/04	A2	STEVEN GUZMAN	1. ADDED DESD34VS2SO (D101) 2. ADDED 10K (R104) 3. REPLACED Q101 WITH PSMNR70-40SSHJ 4. ADDED R105 0R 5. ADDED R106 ThermaLink	20210204_PROJECTS_IdealDiode_A2_00003

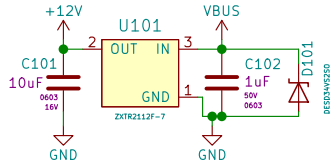

IDEAL DIODE

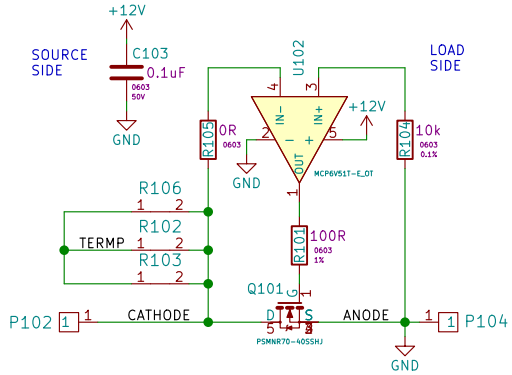

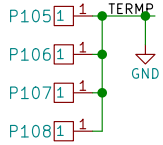

L.E.D.

Sheet: /

File: 2021_Project_OCP_Ideal_Diode.sch

Title:

Size: A	Date:	Rev:
KiCad E.D.A. kicad (5.1.8)-1		Id: 1/1