DATE:	REVISION:	CREATED BY:	DESCRIPTION:	REVISION CODE:
2021/01/20	A0	AUTHOR	INITIAL RELEASE DESIGN	20210120_PROJECTS_IdealDiode_A0_00001
2021/02/04	A2	STEVEN GUZMAN	1. ADDED DESD34VS2SO (D101) 2. ADDED 10K (R104) 3. REPLACED Q101 WITH PSMNR70-40SSHJ 4. ADDED R105 OR 5. ADDED R106 ThermaLink	20210204_PROJECTS_IdealDiode_A2_00003
2021/02/04	A3	STEVEN GUZMAN	1. REPLACED R104, R105 WITH 470R RESISTOR 2. REPLACED R101 WITH 16R RESISTOR	20210308_PROJECTS_IdealDiode_A3_00004
2021/04/03	A4	STEVEN GUZMAN	1. ADDED R107, C104 2. REPLACED P101-104 WITH NEW CONNECTOR	20210329_PROJECTS_IdealDiode_A4_00005

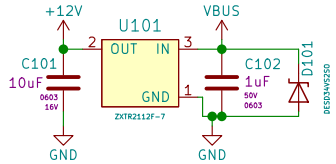

IDEAL DIODE

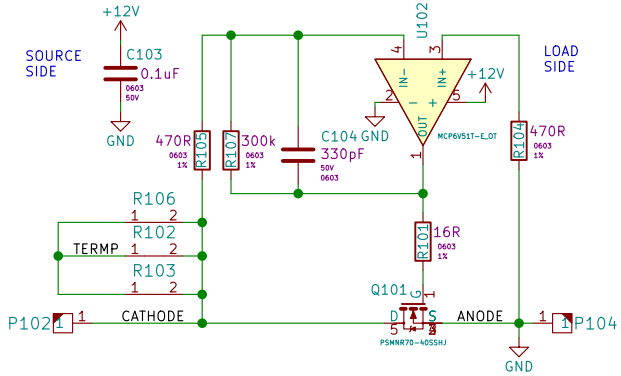

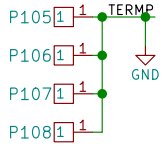

L.E.D.

Sheet: /

File: 2021_Project_OCP_Ideal_Diode.sch

Title: Ideal Diode Low Side N Channel

Size: A	Date: 2021-03-29	**Rev: A4**
KiCad E.D.A. kicad (5.1.9)-1		Id: 1/1