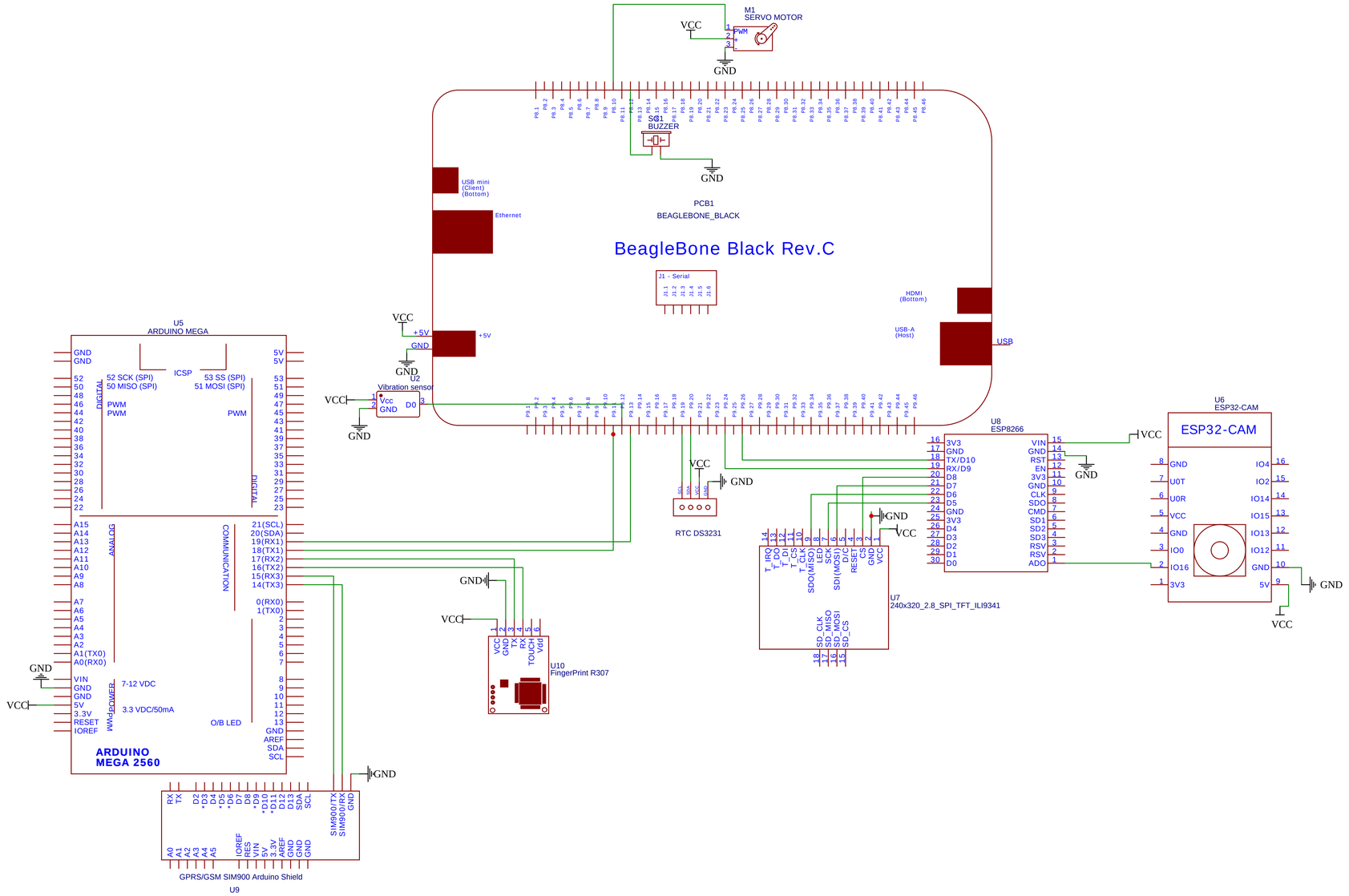

TITLE: SCHEMATIC DESIGN	REV: 1.0
Company: CAPSTONE_PROJECT	Sheet: 1/1
Date: 2021-02-23	Drawn By: SimranFlora

EasyEDA