MSE320: Machine Design

Dr. Ramtin Rakhsha

Final Project Report
Mechanical Clock Design

December 4th, 2024

Group 8

Laith Allawy	301549740
Shahrukh Irfan	301316929
Jihoi Jung	301554880
Simr Virk	301548737
Zakhar Vozovik	301548405

SCHOOL OF MECHATRONIC SYSTEMS ENGINEERING
SIMON FRASER UNIVERSITY

Table of Contents

Introduction	3
Material Selection	4
Power Mechanism	5 - 6
Escapement Mechanism	7 - 8
Decoupling System	9
Gear Train	10 - 11
Calculations, Validation & Simulation	12 - 14
Frame & Clock Hands	15 - 17
Conclusion	18
References	19

Introduction

Mechanical clocks have been a huge part of mankind's history, dating all the way back to the 14th century. Today, they remain an essential part of our lives, quietly helping us keep track of time throughout the day. On the surface, they seem like a very simple invention that we don't give much thought to. But in reality, their inner workings are surprisingly complex and each part is made from precise engineering and thoughtful design. This project explores that hidden complexity through the design and creation of a mechanical grandfather clock, showcasing the precision and intricacies involved in building such a device.

Our mechanical clock project incorporates key systems like the power mechanism, gear train, escapement mechanism, decoupling system, and frame. These components work together to ensure an accurate and reliable timekeeping clock.

The following report details our team's effort in planning, designing, analyzing, and assembling the clock in SolidWorks, highlighting our thought process, the challenges and solutions we encountered throughout the project. This mechanical clock project serves as a demonstration of how collective minds through engineering and teamwork can bring a seemingly simple device to life.

Material Selection

There will be several materials used in the making of the clock. AISI 303 stainless steel is commonly used for machining, and therefore will be used for the gears and shafts in this project. The material is resistant to many outside disturbances, such as corrosion or magnetism. Since oak wood is commonly used in clocks, it will also be used to make the frame for its durability and resistivity to outside disturbances. Other smaller aspects may include paints or small metal pieces to decorate and mark the times on the frame using materials like brass. The clock frame may also be 3D printed using materials pertaining to effective printing, such as PLA (Polylactic Acid).

Power Mechanism

The power mechanism of the mechanical clock is a crucial part of the system as it consists of the power gear and ratchet gear. These gears are essential for the storage and transfer of energy which results in the continuous operation of the mechanical clock.

The power gear makes the clock run by converting gravitational potential energy from a falling weight into rotational motion. A string attached to the weight unwinds as the weight descends, driving the power gear. This gear transfers the energy to the rest of the clock's gear train mechanism, ensuring smooth and reliable operation. The steady unwinding motion provides the energy needed to power the clock over a long period of time. The weight attached by a string is not shown in the CAD model but it would be spooled around the power gear (shown in Figure 2)

The ratchet gear complements the power gear by ensuring the gear train operates in one direction only. This gear prevents any backward motion that could disrupt the clock's functionality. Additionally, the ratchet gear also enables manual winding of the weight without stopping the clock. During the winding process, it isolates the gear train from the rewinding power gear, allowing energy to be stored back into it, all without interrupting the clock's ability to keep time. When the weight starts to unwind again via the power gear, the ratchet gear seamlessly re-engages with the gear train, maintaining synchronization with the power gear and smooth energy transfer.

Altogether, the power gear and ratchet gear form a synchronized mechanism that balances energy storage, energy transfer, and continuous operation, ensuring the mechanical clock runs accurately and reliably.

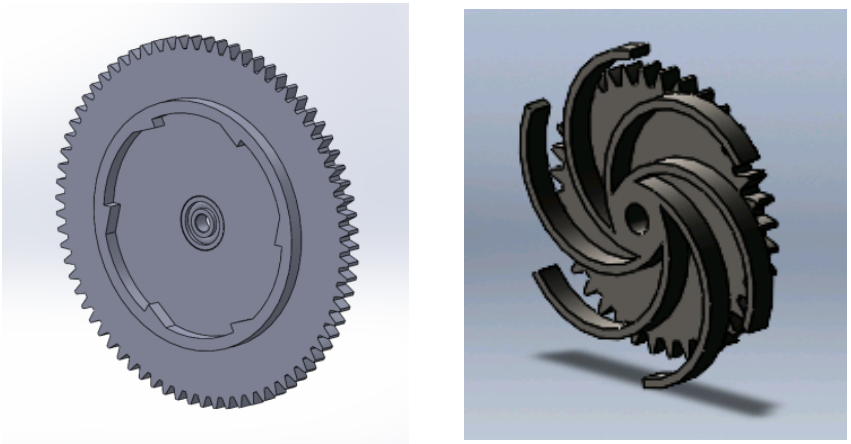

Figure 1: Ratchet Locking Gear and Ratchet Gear

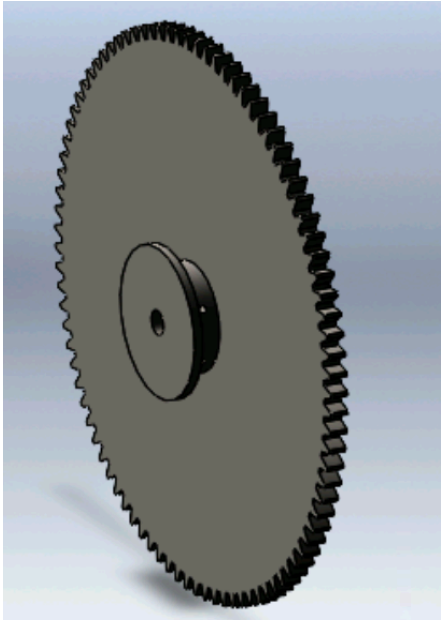

Figure 2: Power Gear (with spool for the string weight)

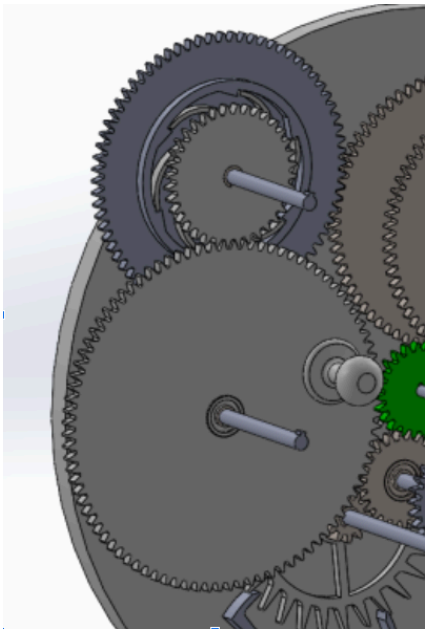

Figure 3: Power Mechanism Assembly (with Knob for Winding Weight)

Escapement Mechanism

The escapement mechanism plays a vital role in controlling the motion of the clock by allowing the gear train to move at specific, regular intervals. It works through the interaction between the escapement wheel and the anchor, which oscillates due to the swinging motion of the pendulum (Figure 4). As the pendulum swings back and forth, it moves the anchor, which alternately locks and releases the escapement wheel (Figure X). This controlled release ensures the clock progresses in a steady, rhythmic manner, marking the passage of time accurately.

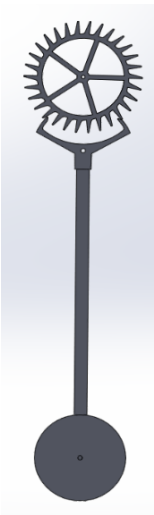

Figure 4: Pendulum and Escapement Wheel

$$T = 2\pi\sqrt{\frac{L}{g}} \qquad (1)$$

The timing of the anchor's movement is directly linked to the pendulum's swing, whose period can be calculated using the formula for a simple pendulum (Formula 1). This precise relationship between the pendulum and the escapement mechanism defines the clock's accuracy. Furthermore, the escapement wheel, while attempting to rotate, brushes against the slanted surfaces of the anchor during each release. This interaction transfers a small amount of energy back to the pendulum, compensating for energy lost due to friction (Figure 6). This feedback mechanism keeps the pendulum swinging and maintains the clock's continuous operation.

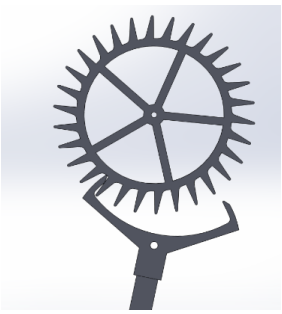

Figure 5: Anchor in locked position

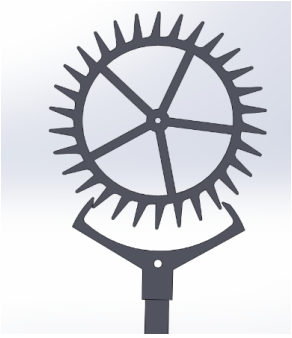

Figure 6: Escapement wheel brushing against anchor during energy transfer

Decoupling System

The decoupling system is used to isolate the driving mechanism from the sensitive components of the auxiliary mechanism, like the pendulum and escapement. This permits the timekeeping mechanism to operate independently from changes in other mechanisms and therefore ensures accurate time measurement. Moreover, it permits the user to change the positioning of the hands of the clock without needing to engage the entirety of the gear system.

The decoupling system in our project utilizes a spring that applies tension to the two controlled gears. This design allows the auxiliary mechanism to be driven by the timekeeping mechanism when it is non-activated. The spring allows movement only in one direction. If the auxiliary mechanism is moved, then the spring will cause no change in the time-keeping mechanism's position. This configuration ensures that the accurate time-keeping elements are not affected by other activities within the clock including user interference.

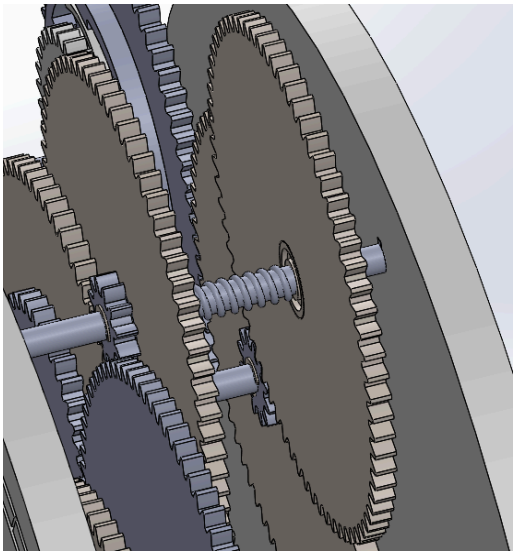

Figure 7: Decoupler Spring

The decoupling system in our project was used to preserve the independence of timekeeping and auxiliary mechanisms. When the timekeeping mechanism is operational, the stretched spring between the two gears allows the energy to be transferred to the auxiliary mechanism. However, if energy is applied to the auxiliary system, the design of the decoupler would not permit this movement to affect the driving mechanism. This feature increases the accuracy and reliability of the clock, even when its auxiliary functions are running simultaneously.

Gear Train

The purpose of the gear train in a clock's mechanism is to convert the inputted angular velocity from a power source to a specific rate for the gears linked to the second, minute, and hour hand through a series of gear ratios. The specific total ratios needed between the second, minute, and hour gears is 2 rotations per 1 rotation of the escapement gear to the second gear, 60 rotations per 1 rotation of the second to minute gear, and 12 rotations per 1 rotation of the minute to hour gear. In other words, the ratios between the gears allow for the consistent keepage of time, regardless of the amount or rate of the inputted angular velocity.

All of the gears in the gear train are positioned in a way to where the main three time keeping gears (second gear, minute gear, and hour gear, which are the green gears shown in figure 8) rotate down the same shaft to allow the hands of the clock to rotate in one circle, as a standard clock would. Compromises and ratio adjustments must be made in order to fit all of the ratios in the most efficient manner and to get the time gears to spin clockwise. A notable example would be any 1:1 gear ratio that is needed for some time gears to rotate properly, as without them, the time gears may rotate counter-clockwise.

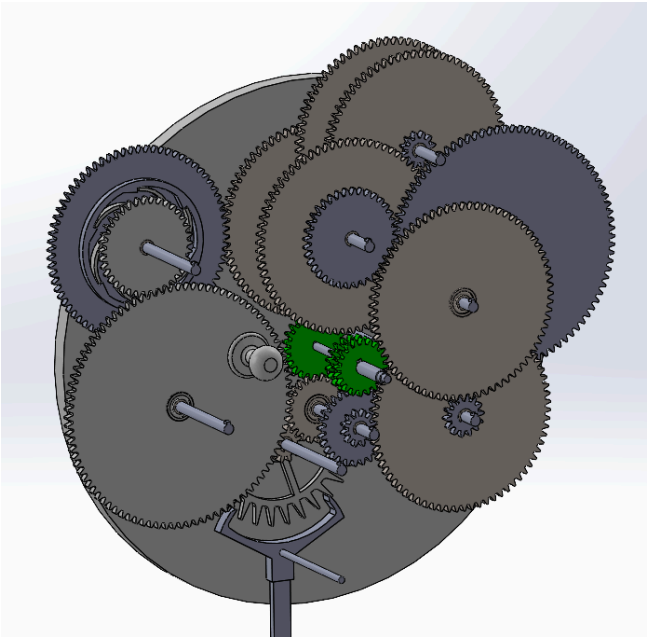

Figure 8: Gear Train

The gears in the gear train must also be layered axially to allow for the time gears to be lined up in a single line. This means that most axles must be positioned in a way where other gears do not interfere with the axles while still maintaining compactness for the frame to fit properly. Some select few axles may not be connected to both the front and the back frame, and may be connected to purely either one to allow for the gears to fit inside the frame. An example is shown below in figure 9.

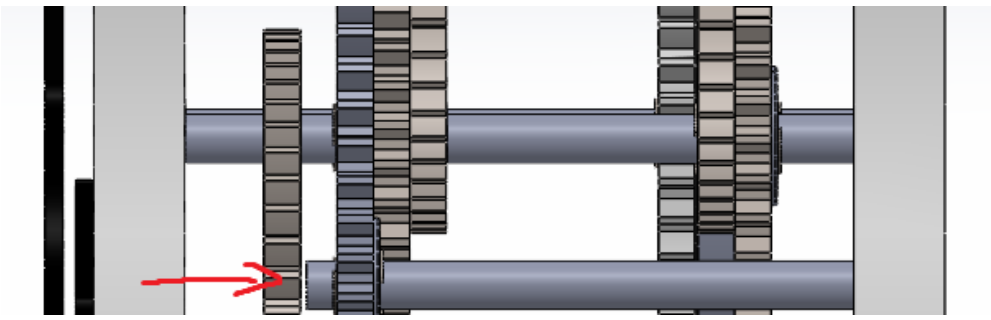

Figure 9: Axle connections

There are a total of 15 gears that change the ratios between the time gears. The escapement gear is attached axially to a 12 tooth gear that links to the second gear, and the decoupling mechanism is axially linked between the gear ratio gears of the second and minute gears, as shown in figure 11. The escapement gear locks the gear train to a specific rate while gravitational power, by virtue of a weight attached to a spool in the power gear, allows the entire system to run.

Overall, the gear train succeeds in obtaining the ratios between the second, minute, and hour gears, while still maintaining a compact and sturdy build, able to keep time at a consistent rate. The calculations and the methods of obtaining the gear train ratios are detailed in the calculations, validation and simulation section below.

Calculations, Validation & Simulation

Hand calculations were performed on the gear train to ensure the correct gear ratios were used for the clock. The two main constraints that the calculations had to consider were:

1. The gear train must include gears that rotates once a minute, once an hour, and once every 12 hours
2. These gears must be going clockwise

Knowing these constraints, the following gear train calculations can be seen below.

1 - 2:	$2 \text{ RPM} \times \frac{12\ teeth}{24\ teeth} = 1 \text{ RPM CCW}$
2 - 3:	$1 \text{ RPM} \times \frac{24\ teeth}{24\ teeth} = 1 \text{ RPM CW (Seconds Hand)}$
3 - 4:	$1 \text{ RPM} \times \frac{24\ teeth}{72\ teeth} \times \frac{60\ min}{hour} = 20 \text{ Rotations / Hour CCW}$
4 - 5:	$20 \text{ RPH} \times \frac{12\ teeth}{72\ teeth} = 3.\overline{33} \text{ RPH CW}$
5 - 6:	$3.\overline{33} \text{ RPH} \times \frac{1}{1} = 3.\overline{33} \text{ RPH CW (Decoupling System)}$
6 - 7:	$3.\overline{33} \text{ RPH} \times \frac{12\ teeth}{72\ teeth} = 0.\overline{55} \text{ RPH CCW}$
7 - 8:	$0.\overline{55} \text{ RPH} \times \frac{36\ teeth}{91\ teeth} = 0.\overline{219780} \text{ RPH CW}$
8 - 9:	$0.\overline{219780} \text{ RPH} \times \frac{91\ teeth}{20\ teeth} = 1 \text{ RPH CCW}$
9 - 10:	$1 \text{ RPH} \times \frac{20\ teeth}{20\ teeth} = 1 \text{ RPH CW (Minutes Hand)}$
10 - 11:	$1 \text{ RPH} \times \frac{20\ teeth}{28\ teeth} = 0.\overline{714285} \text{ RPH CCW}$
11 - 12:	$0.\overline{714285} \text{ RPH} \times \frac{12\ teeth}{72\ teeth} = 0.119 \text{ RPH CW}$
12 - 13:	$0.119 \text{ RPH} \times \frac{14\ teeth}{73\ teeth} = 0.0288 \text{ RPH CCW}$
13 - 14:	$0.0288 \text{ RPH} \times \frac{73\ teeth}{20\ teeth} x \frac{24\ hours}{day} = 2 \text{ Rotations / Day CW (Hours Hand)}$

Table 1: Hand Calculations

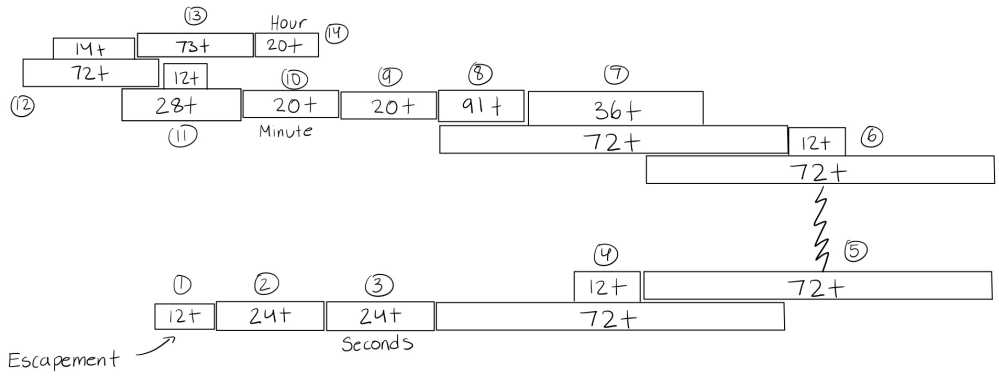

Figure 11: Gear Train (not including the power and ratchet gears)

Gear 1 from figure 11 represents the escapement wheel, and has an RPM of 2, which is controlled by the adjustable pendulum. Knowing this fixed rotation rate, the calculations were performed and showcase how the second, minute, and hour gear ratios were derived. For these calculations, the ratio between the amount of teeth in the driving gear over the amount of teeth in the driven gear were used for all the steps. Between gear 5 and 6 in figure 11 is a representation of the decoupling system, which rotates both of these gears at the same RPM in the same direction.

To confirm if these calculations matched with real life circumstances, a FEA analysis was conducted. The software used for the analysis is called "geargenerator.com," and is able to replicate gear trains as well give the user important information on the ratios involving the input gear. To add on, other important information such as the RPM of all the gears included, their relative positions in space, and the gear properties are also easily accessible with this software. After inputting the gear train and applying a speed of 2 RPM to the escapement, the following ratios and RPM's were found.

Figure 12: Gear Information Derived from the Software

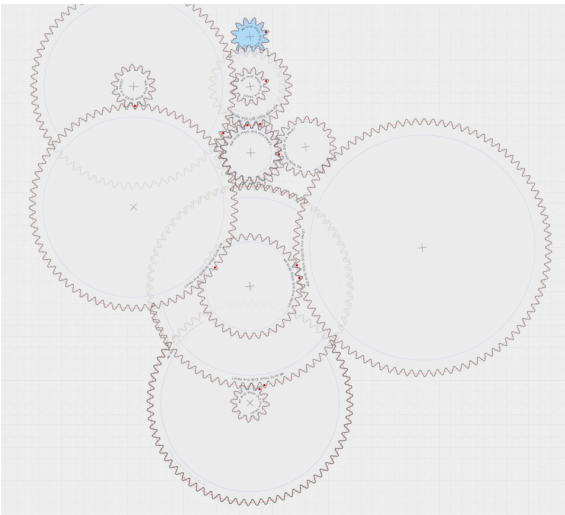

Figure 13: Gear Train Inputted into the Software

From general observation, there are no discrepancies between the hand-calculations and the simulation results. Since the gear generator software doesn't include external factors such as the power gear, the ratchet gear, and other potential sources which could influence the RPM of the gears, a motion analysis was also conducted on the gear train in SolidWorks.

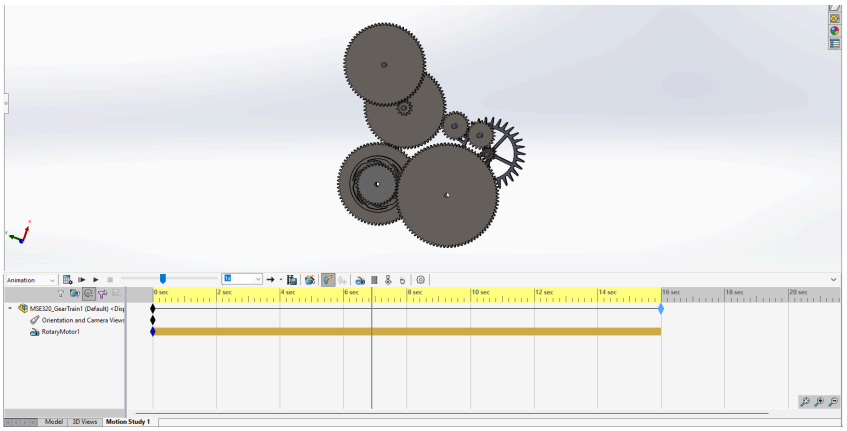

Figure 14: Motion Analysis in Solidworks

From figure 14, you can see half of the gear train being used in a motion analysis. Half of the gear train was used because the decoupler system is the only component linking this gear train to the other. From figure 14, the gears used in this train were the escapement, weight, ratchet, and the gears responsible for controlling the "seconds" gear. After adding all the mechanical mates to the gears so they would be linked, an RPM of 2 was given to the escapement wheel in the clockwise direction and the simulation confirmed our theoretical analysis. One of the teeth on the seconds gear was marked, and was watched for one minute to ensure it only rotated once, which confirmed the results.

Frame & Clock Hands

The frame of the clock is responsible for holding the entire system together as well as displaying the clock face. The back frame from figure 15 showcases how all the shafts are connected to the frame. By using keyfits, the shafts can simply be placed inside the key fit holes to prevent rotation since most of these shafts are supposed to be stationary. As for the shafts / hollow concentric rods that are attached to the second, minute, and hour gears, bearing holes were inserted into the frame to place the bearing inside, which helps support the shafts / concentric rods to rotate.

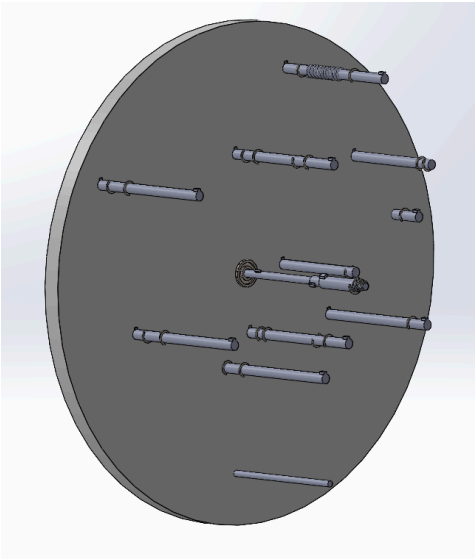

Figure 15: Back Frame with Shafts Inserted, C-Clips, and a Bearing

The front frame also includes the key fit holes at the same locations, as well as another bearing for the only rotating shaft. As for the clock face, a roman numeral number system was used, as seen in Figure 16.

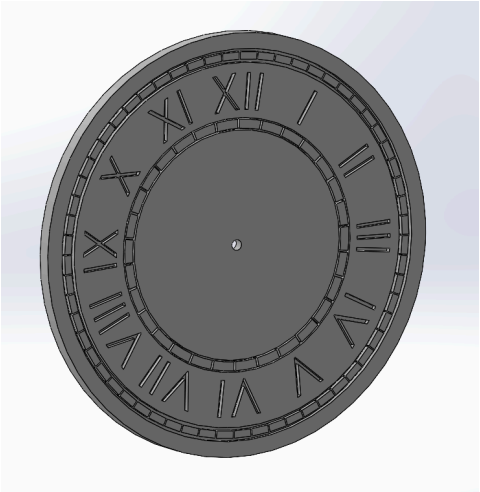

Figure 16: Front Frame Display

The clock hands were attached to their respective gears with concentric rods. A small shaft runs from the back of the frame to the front, and is supported by two bearings as mentioned in the frame section. This shaft is free to rotate, and is rigidly attached to the seconds gear by adding a tooth on the shaft that fits into the keyhole of the gear. Therefore, the shaft would rotate at the same RPM as the gear. To connect the minutes gear to a shaft, a concentric rod was placed over the shaft that rotates with the seconds gear. This rod also has a tooth at the end which fits into the keyhole of the minutes gear. Therefore, these rods would rotate at different RPMS, despite being on the same "shaft." A similar concept was used for the hours gear as can be seen in figure 17.

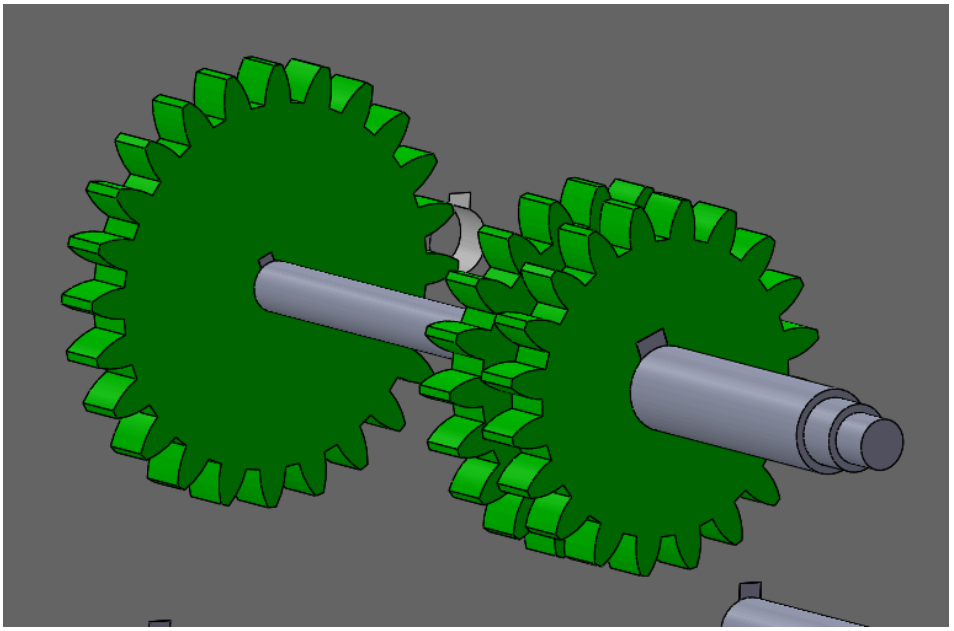

Figure 17: Concentric Rod Design

The hands of the clock are attached rigidly to these shafts simply by inserting the hole of the arms through their respective shaft, as can be seen in figure 18.

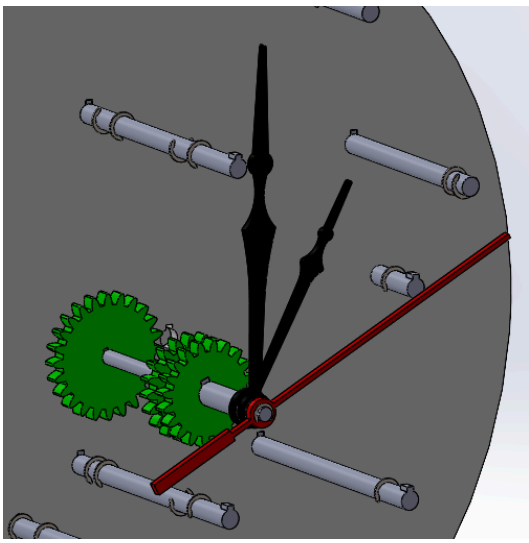

Figure 18: Concentric Rod Design

These arms are perfect fits to the shafts, and friction would support the rotation of the arms so they would rotate at the same RPM as their respective gear. To ensure the clock hands never move axially, C-clips were used to keep it in place. To add on, the hands of the clock also prevent the front frame from moving axially.

Conclusion

To conclude, the overall design of the mechanical clock proved to be a challenge to design from scratch, however, it was a valuable insight into the world of engineering design and manufacturing, especially in the depth of gears and the inner working of clocks. The 3D modelling proved to be valuable in hands-on practical experience and applying real world circumstances and tolerances to help with design specifications proved to be a useful extra lesson in CAD modelling. Building and prototyping some parts of the design was key in reinforcing the understanding of the mechanics involved with the gears, and coming up with solutions to some of the problems in creating parts similar to the gear train helped immensely in further exploring the practical applications of a team-based project. Collaboration between group members was also crucial to the effectiveness and consistency of parts and metrics in the design, notably in SolidWorks, as assemblies need to be combined and work in conjunction with each other to be able to fully function as one unit. Many mistakes and confusion between parts have been avoided entirely due to the communication established between the members, and is a practice that will be continued in future projects.

Overall, this project proved to be a successful study on the practical and real world applications of CAD design and manufacturing. The methods and discussions explored in this project within the team allowed for a vast insight into the type of communication and team working ability that would be expected in a standard engineering team, and creating a basis of knowledge towards knowing how to properly design parts such as gears or shafts made for an easy understanding of approaching standardized design specifications. Since almost every single engineering project involves some form of teamwork and CAD design, this project proved to be a solid example of what the process is like and to show what improvements can be worked on in the future.

References

Peterson, Steve. “3D PRINTED PENDULUM CLOCK ASSEMBLY PART 1.” *YouTube*, YouTube, 8 Oct. 2020, www.youtube.com/watch?v=NduVa_3wJFY.

Peterson, Steve. “3D PRINTED PENDULUM CLOCK ASSEMBLY PART 2.” *YouTube*, YouTube, 8 Oct. 2020, www.youtube.com/watch?v=IOmcpzH5iek&t=1004s.

Engineezy. “Can you 3D Print a Mechanical Clock?.” *YouTube*, YouTube, 17 Nov. 2022, https://www.youtube.com/watch?v=yfNFbE0ahi0.