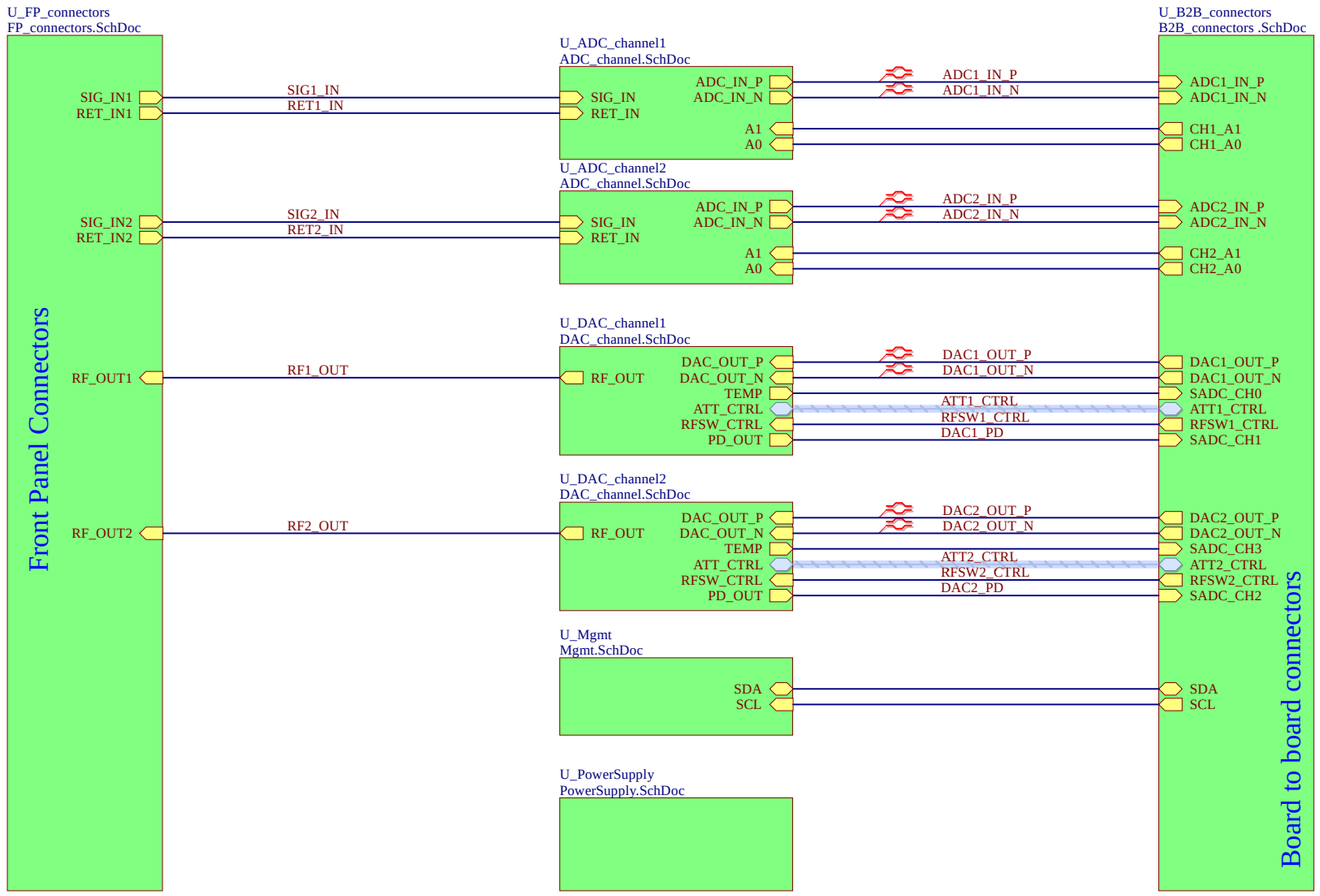

Project/Equipment	ADC/DAC MEZZANINE		
Document	*allaki_mezzanine.PrjPCB*	Designer SBH	
	allaki_mezz_top.SchDoc	Drawn by SBH	XX/XX/XXXX
		Check.by	-
		Last Mod. -	2017-03-31
		File allaki_mezz_top.SchDoc	
		Print Date 2017-08-01 16:01:35	Sheet 1 of
Warsaw Univeristy of Technology *Nowowiejska 15/19*	*ISE*	ARTIQ	Size A3 / Rev -

Setting 1: A-B1; B2 grounded or matched

Setting 2: A-B2; B1 grounded or matched

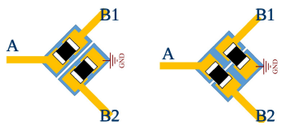

Jumper layout drawing

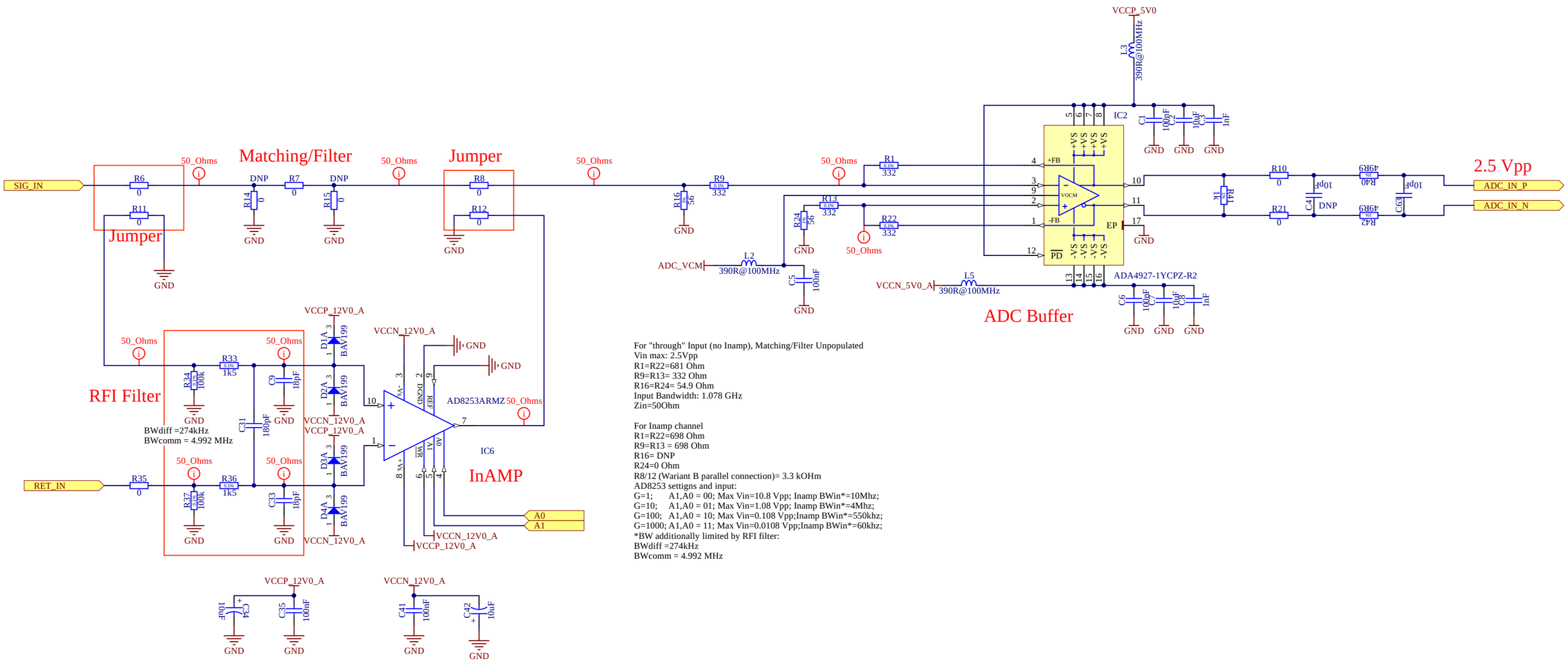

For "through" Input (no Inamp), Matching/Filter Unpopulated
Vin max: 2.5Vpp
R1=R22=681 Ohm
R9=R13= 332 Ohm
R16=R24= 54.9 Ohm
Input Bandwidth: 1.078 GHz
Zin=50Ohm

For Inamp channel
R1=R22=698 Ohm
R9=R13 = 698 Ohm
R16= DNP
R24=0 Ohm
R8/12 (Wariant B parallel connection)= 3.3 kOHm
AD8253 settigns and input:
G=1; A1,A0 = 00; Max Vin=10.8 Vpp; Inamp BWin*=10Mhz;
G=10; A1,A0 = 01; Max Vin=1.08 Vpp; Inamp BWin*=4Mhz;
G=100; A1,A0 = 10; Max Vin=0.108 Vpp;Inamp BWin*=550khz;
G=1000; A1,A0 = 11; Max Vin=0.0108 Vpp;Inamp BWin*=60khz;
*BW additionally limited by RFI filter:
BWdiff =274kHz
BWcomm = 4.992 MHz

Project/Equipment	ADC/DAC MEZZANINE		
Document	allaki_mezzanine.PrjPCB ADC_channel.SchDoc	Designer SBH	
		Drawn by SBH	XX/XX/XXXX
		Check.by	-
		Last Mod. -	2017-07-31
		File ADC_channel.SchDoc	
		Print Date 2017-08-01 16:01:36	Sheet - of -
ARTIQ	Warsaw Univeristy of Technology Nowowiejska 15/19	ISE	ARTIQ
		Size A3	Rev -

Board-2-Board Analog Connectors

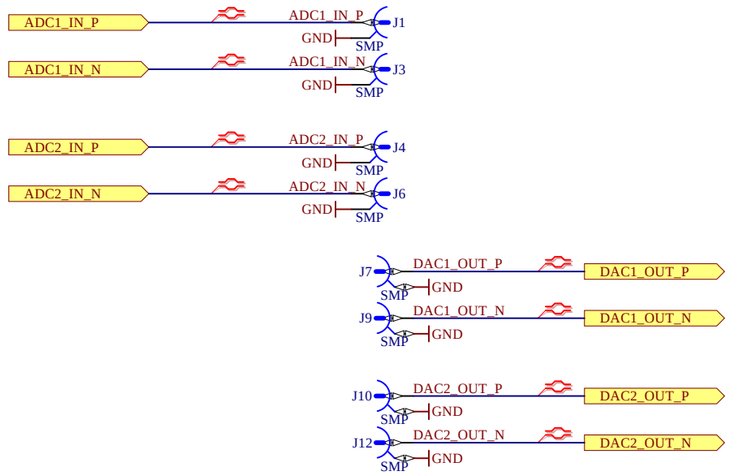

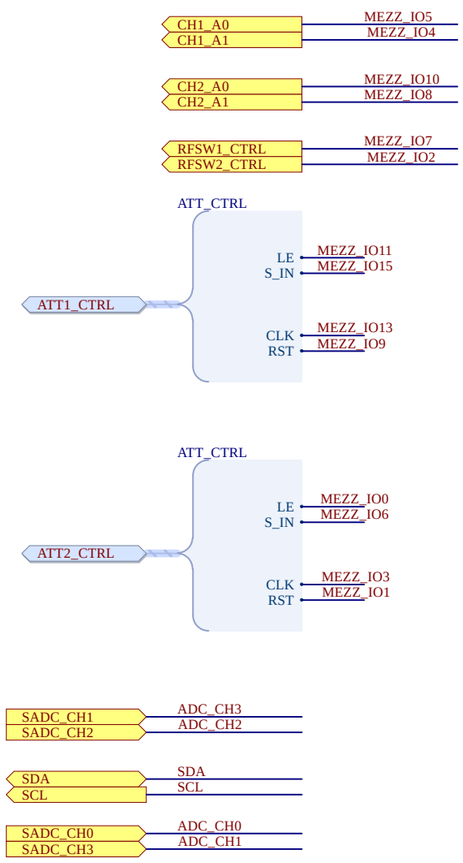

Board-2-Board Digital Connector

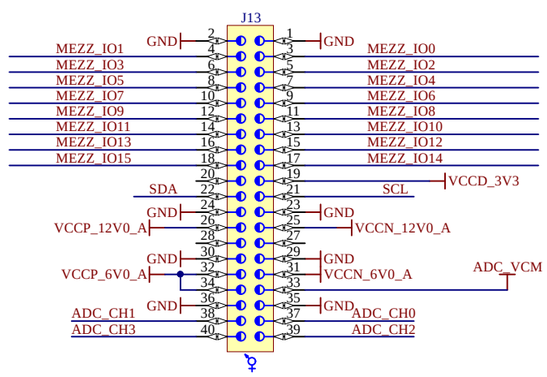

Project/Equipment	ADC/DAC MEZZANINE		
Document	*allaki_mezzanine.PrjPCB B2B_connectors .SchDoc*	Designer SBH	
		Drawn by SBH	XX/XX/XXXX
		Check.by	-
		Last Mod. -	2017-03-31
		File B2B_connectors .SchDoc	
		Print Date 2017-08-01 16:01:36	Sheet - of -
ARTIQ	*Warsaw Univeristy of Technology Nowowiejska 15/19* *ISE*	ARTIQ	Size A3 / Rev -

One of Two RF filters can be used switchable by the two jumpers (R57/59 and R58/C28)
for jumper configuration see ADC_channel sheet
Populate Filter Components according to individual project design
For Custom FIlter reference design and Possible configurations (as AWR MWO projects) are found in documentation folder

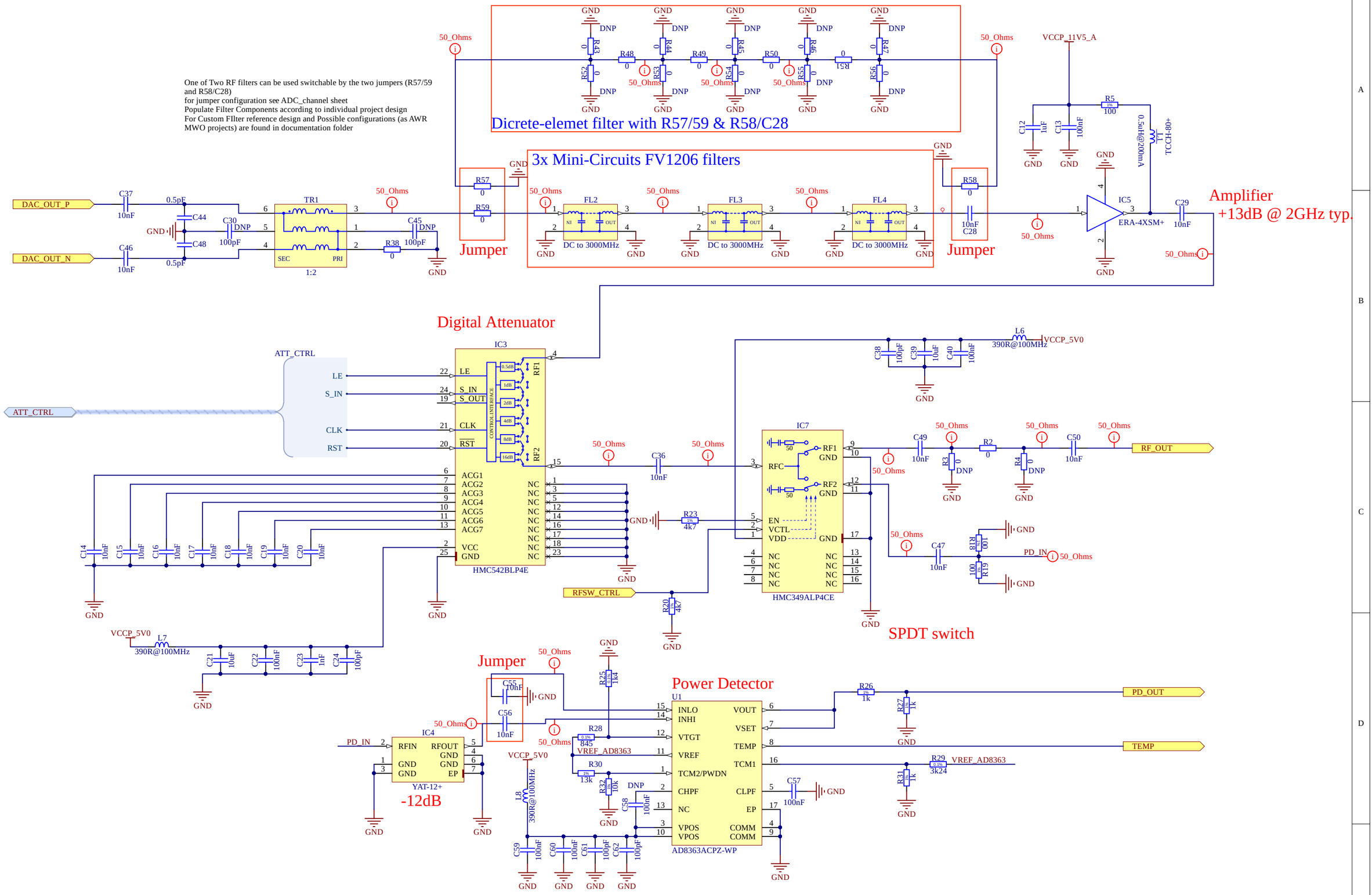

Project/Equipment	ADC/DAC MEZZANINE
Document	allaki_mezzanine.PrjPCB DAC_channel.SchDoc
Designer	SBH
Drawn by	SBH
Check.by	-
Last Mod.	-
	XX/XX/XXXX
	2017-07-31
File	DAC_channel.SchDoc
Print Date	2017-08-01 16:01:36
Sheet	- of -
Size	A3
Rev	-

Warsaw Univeristy of Technology
Nowowiejska 15/19
ISE
ARTIQ

Output SMAs

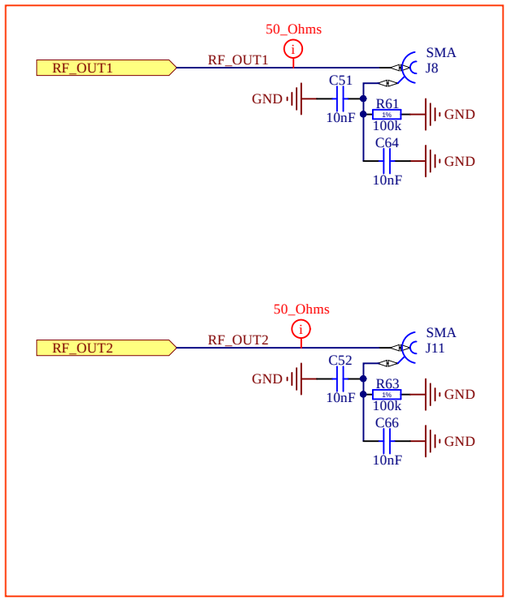

Input SMAs

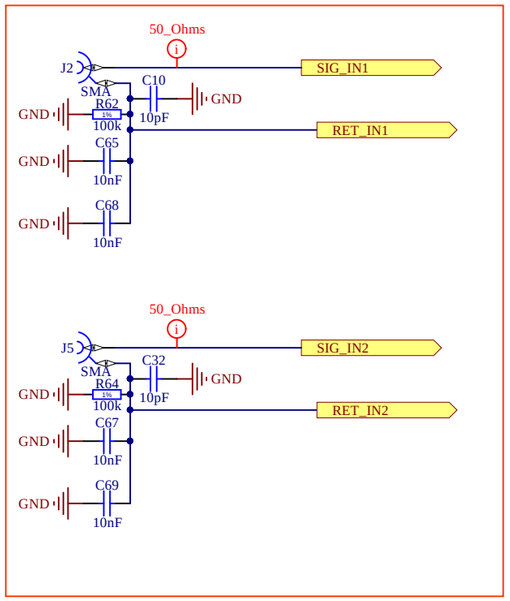

Input considerations and Variants:
-> ADC-channel.SchDoc

Project/Equipment	ADC/DAC MEZZANINE		
Document	***allaki_mezzanine.PrjPCB FP_connectors.SchDoc***	Designer SBH	
		Drawn by SBH	XX/XX/XXXX
		Check.by	-
		Last Mod. -	2017-04-01
		File FP_connectors.SchDoc	
		Print Date 2017-08-01 16:01:36	Sheet - of -
ARTIQ	*Warsaw Univeristy of Technology* *Nowowiejska 15/19*	***ISE***	ARTIQ
		Size A3	Rev -

ID EEPROM

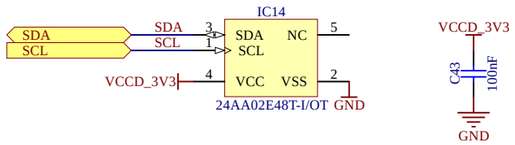

Temperature sensor

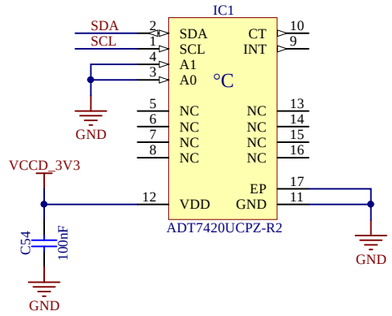

Project/Equipment	ADC/DAC MEZZANINE		
Document	*allaki_mezzanine.PrjPCB Mgmt.SchDoc*	Designer SBH	
		Drawn by SBH	XX/XX/XXXX
		Check.by	-
		Last Mod. -	2017-03-31
		File Mgmt.SchDoc	
		Print Date 2017-08-01 16:01:36	Sheet - of -
ARTIQ	*Warsaw Univeristy of Technology Nowowiejska 15/19*	*ISE*	ARTIQ
		Size A3	Rev -

+5V @ 170mA max

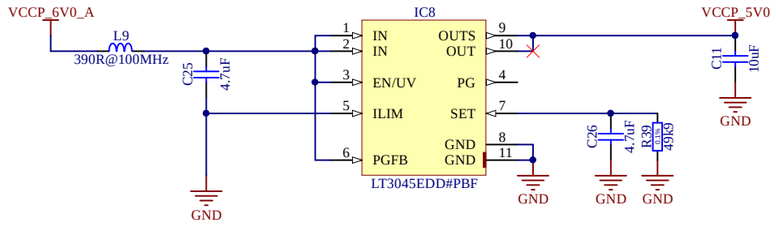

-5V @ 90mA max

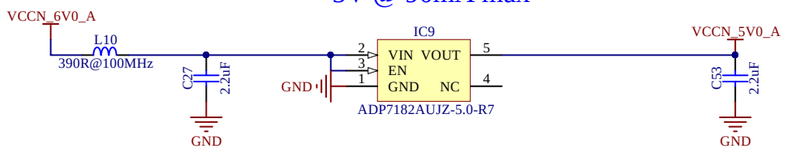

+11V5

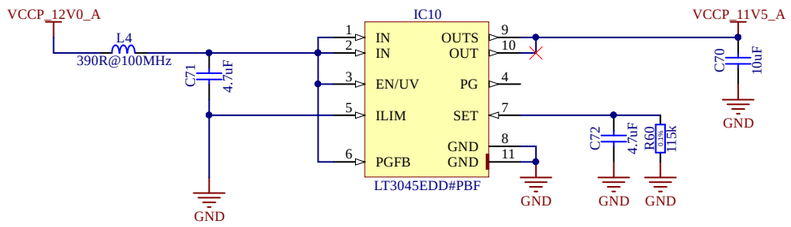

Project/Equipment	ADC/DAC MEZZANINE		
Document	*allaki_mezzanine.PrjPCB PowerSupply.SchDoc*	Designer SBH	
		Drawn by SBH	XX/XX/XXXX
		Check.by	-
		Last Mod. -	2017-07-31
		File PowerSupply.SchDoc	
		Print Date 2017-08-01 16:01:36	Sheet - of -
Warsaw Univeristy of Technology Nowowiejska 15/19	*ISE*	ARTIQ	Size A3 / Rev -

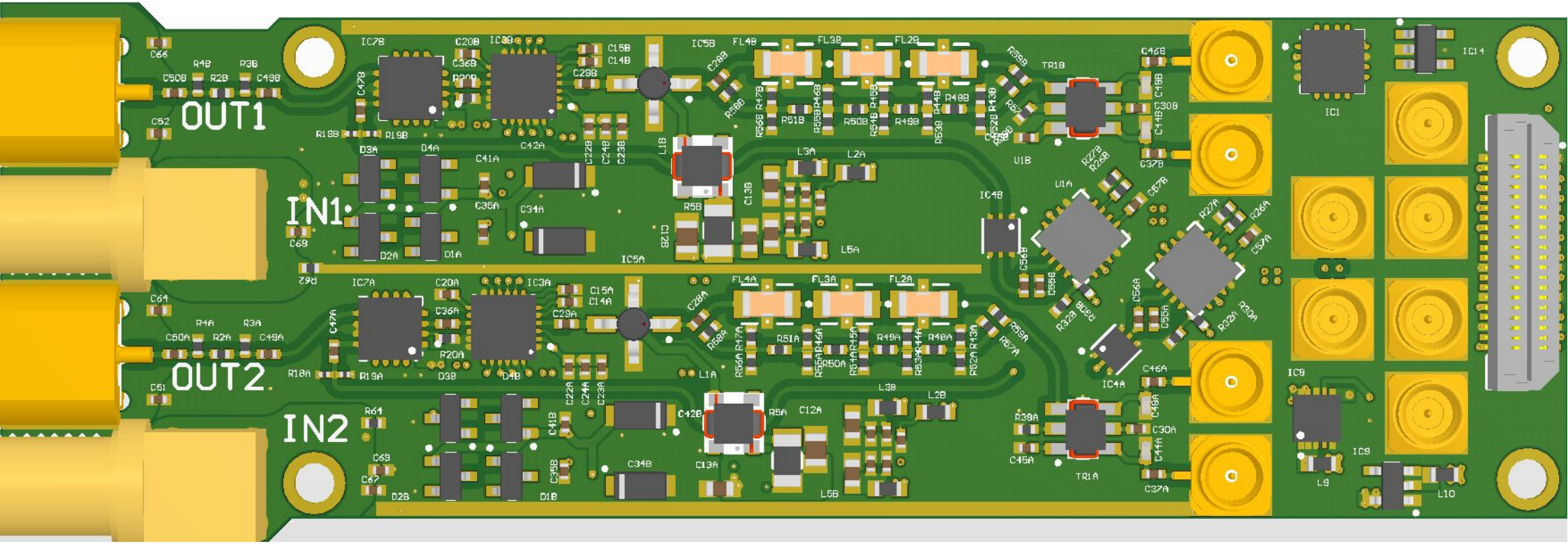
OUT1
IN1
OUT2
IN2

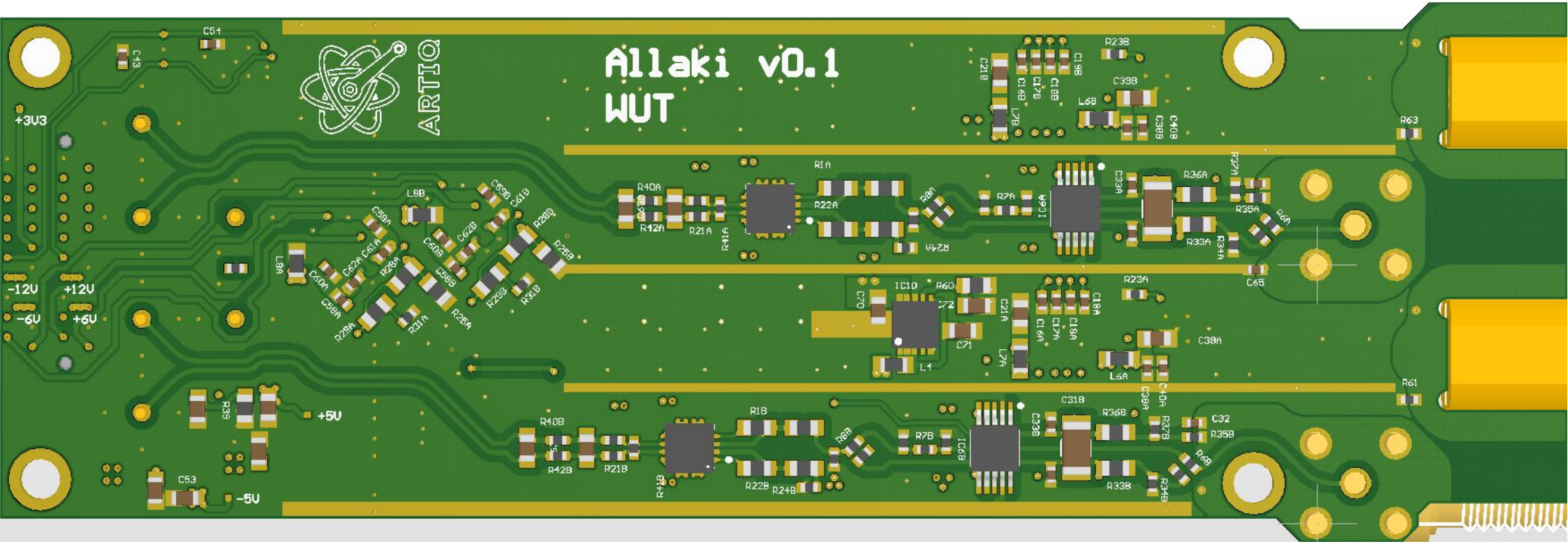
Allaki v0.1
WUT
ARTIQ
+3V3
-12V
+12V
-6V
+6V
+5V
-5V
C54
C43
C53
R63
R61
R23B
C39B
L6B
C40B
C38B
C33B
R36A
R37A
R35A
R6A
R33A
R34A
C65
R23A
C38A
L6A
C40A
C38A
R37B
C32
R35B
R6B
R33B
R34B
C31B
R36B
C33B
IC9B
R7B
R8B
R22B
R24B
R41B
R21B
R42B
R40B
R1B
R3B
R29B
R28B
R26B
R25B
R31B
R28A
R26A
R31A
R29A
C58A
C60A
L9A
C62A
C61A
R28A
C58B
C60B
C62B
C59B
C61B
L8B
C59A
R40A
R42A
R21A
R41A
R1A
R22A
R24A
R8A
R7A
IC9A
C33A
C70
IC10
R60
C72
C71
L4
C21A
L7A
C16A
C17A
C19A
C18A
R23B
C39B
L6B
C40B
C38B
C33B
C18B
C17B
C16B
L7B
C21B

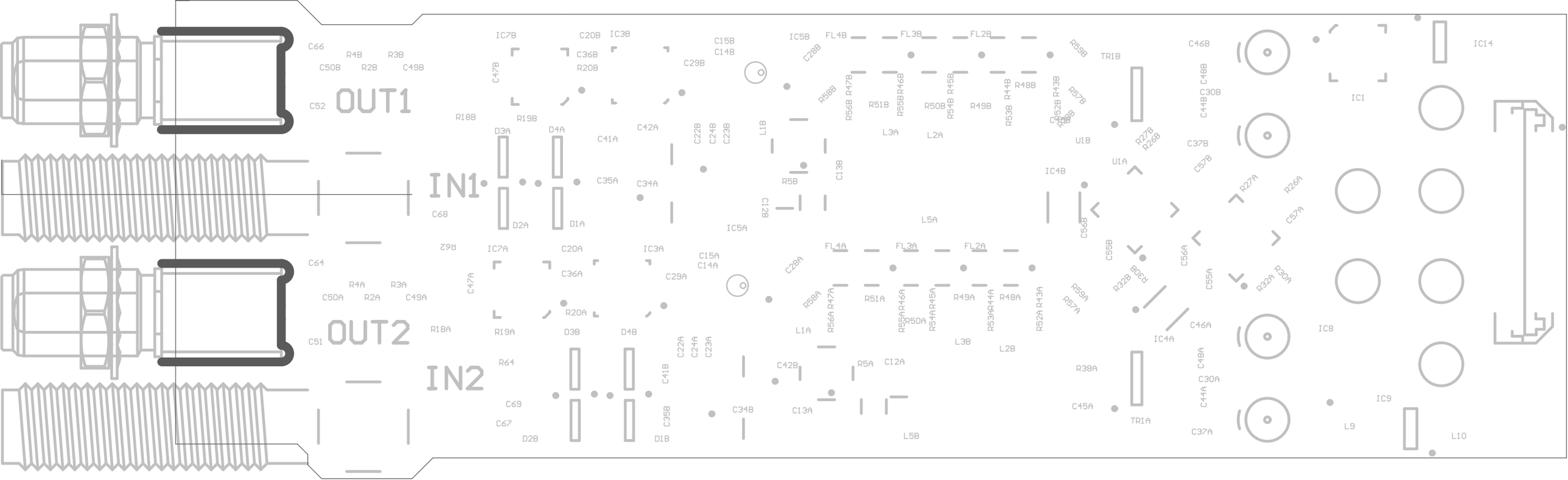
OUT1
OUT2
IN1
IN2
C66
R4B
R3B
C50B
R2B
C49B
C52
C64
R4A
R3A
C50A
R2A
C49A
C51
IC7B
C20B
IC3B
C36B
R20B
C47B
R18B
R19B
D3A
D4A
C41A
C42A
C35A
C34A
C68
D2A
D1A
R62
IC7A
C20A
IC3A
C36A
C47A
R20A
R18A
R19A
D3B
D4B
R64
C69
C67
D2B
D1B
C41B
C35B
C22B
C24B
C23B
C29B
C15B
C14B
C22A
C24A
C23A
C29A
C15A
C14A
C34B
IC5B
FL4B
FL3B
FL2B
C28B
R58B
R47B
R56B
R51B
R55B
R46B
R50B
R54B
R45B
R49B
R53B
R44B
R48B
R52B
R43B
R59B
R57B
L1B
L3A
L2A
C13B
R5B
C12B
IC5A
L5A
IC4B
U1B
TR1B
R27B
R26B
U1A
C46B
C48B
C30B
C44B
C37B
C57B
C56B
R27A
R26A
C57A
C55B
C56A
C55A
R32B
R30B
R32A
R30A
FL4A
FL3A
FL2A
C28A
R58A
R47A
R56A
R51A
R55A
R46A
R50A
R54A
R45A
R49A
R53A
R44A
R48A
R52A
R43A
R59A
R57A
L1A
L3B
L2B
C42B
R5A
C12A
C13A
L5B
R38A
C45A
TR1A
IC4A
C46A
C48A
C30A
C44A
C37A
IC1
IC14
IC8
IC9
L9
L10

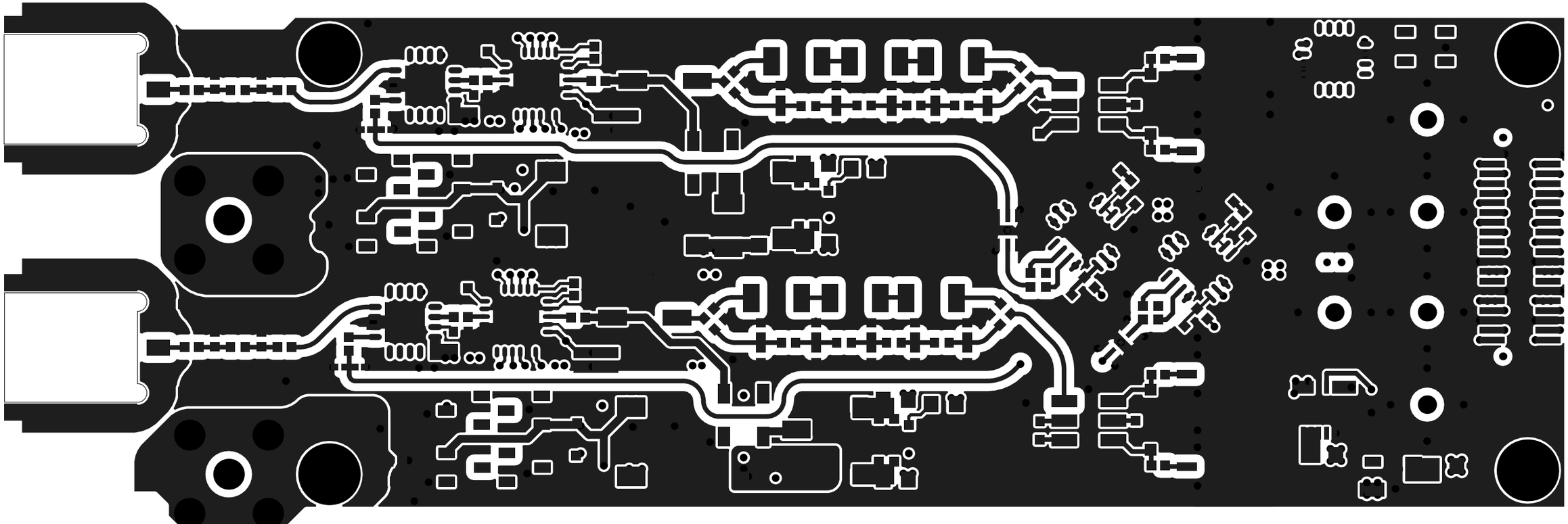

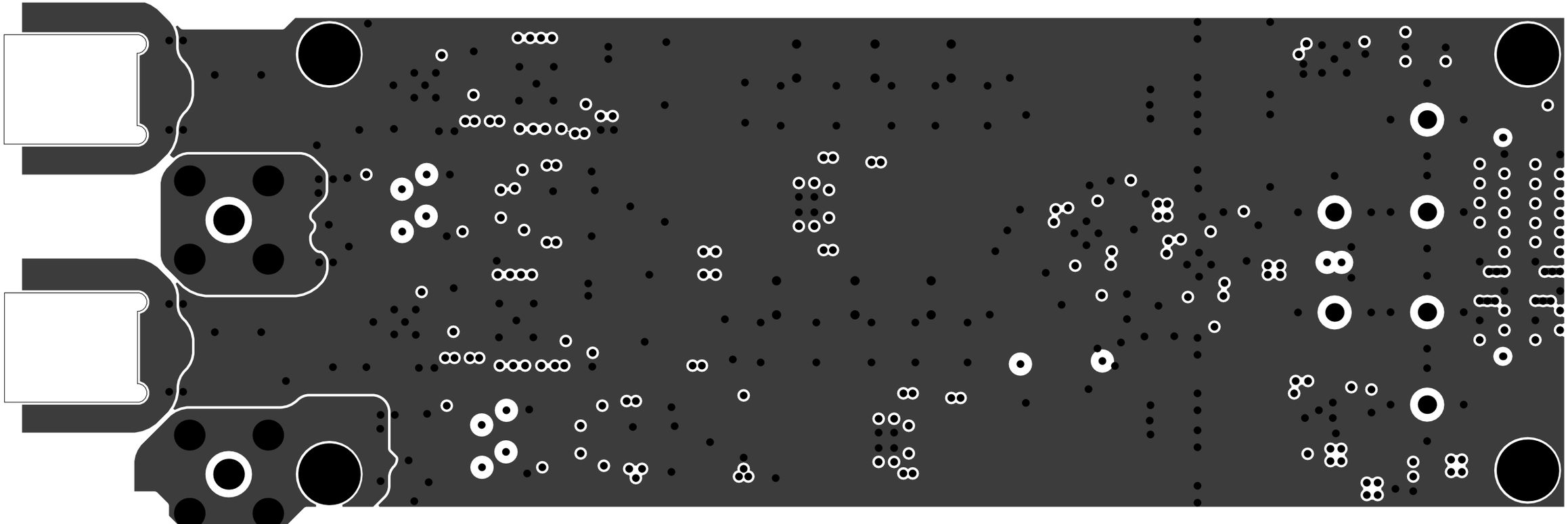

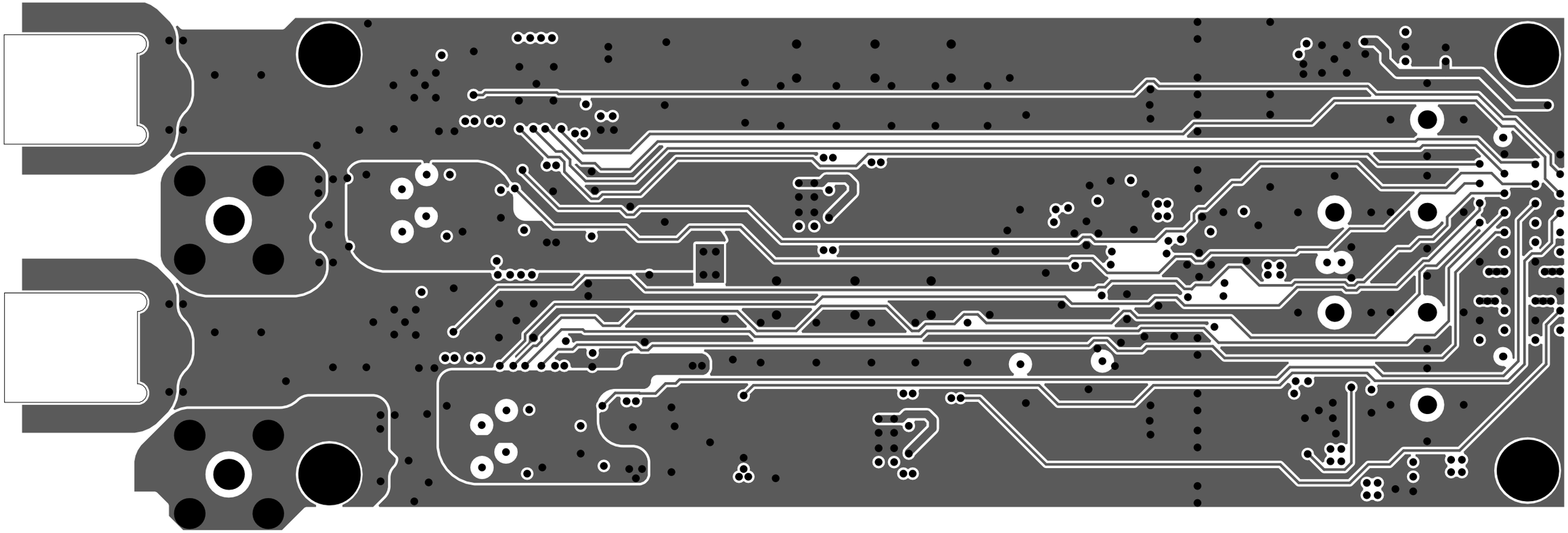

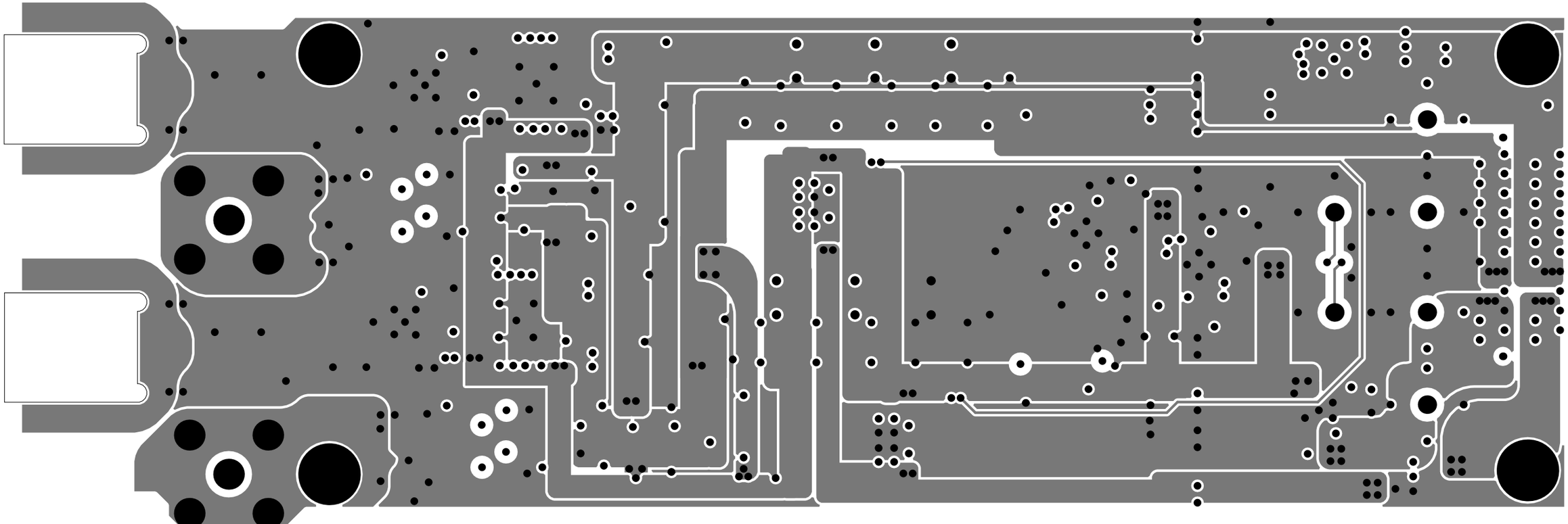

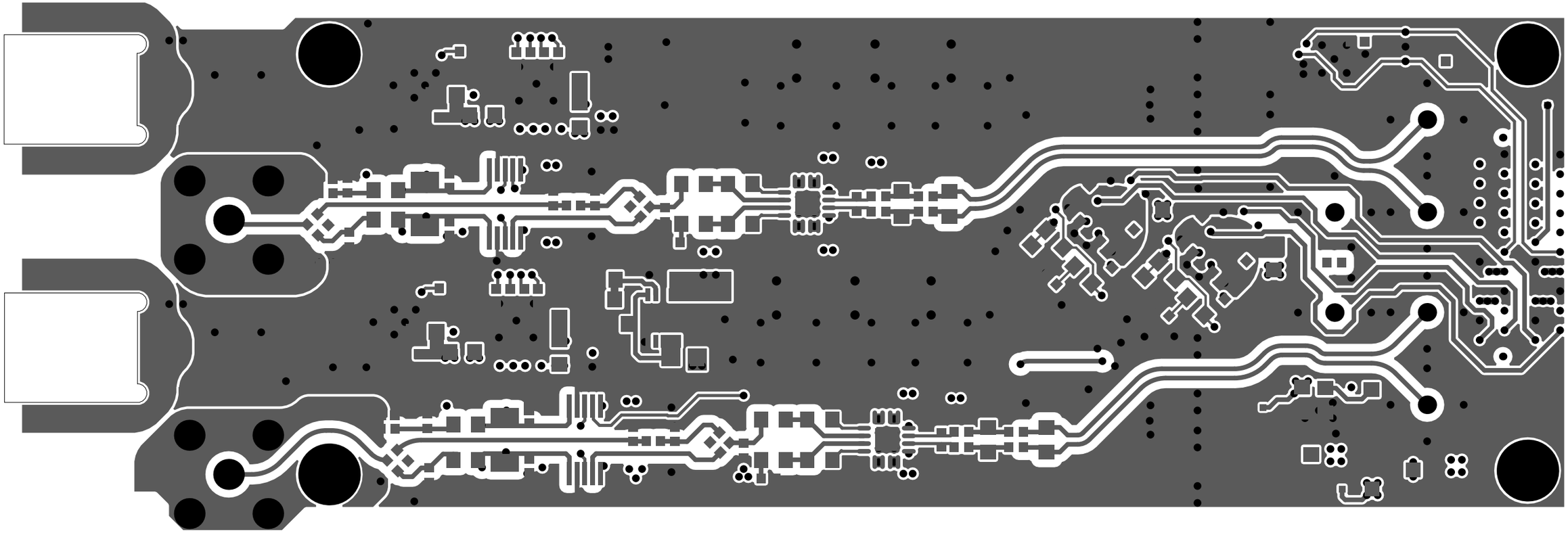

AIIaki v0.1
WUT

+3V3

-12V +12V

-6V +6V

+5V

-5V