In [2]:
```
# Importing standard Qiskit libraries
from qiskit import QuantumCircuit,transpile
from qiskit.visualization import *
# qiskit-ibmq-provider has been deprecated.
# Please see the Migration Guides in https://ibm.biz/provider_migration_guide for m
from qiskit_ibm_runtime import QiskitRuntimeService, Sampler, Estimator, Session, O
# Loading your IBM Quantum account(s)
service = QiskitRuntimeService(channel="ibm_cloud")
from qiskit_aer import AerSimulator
from qiskit_ibm_runtime import QiskitRuntimeService
# Invoke a primitive. For more details see https://docs.quantum.ibm.com/run/primiti
# result = Sampler().run(circuits).result()
import numpy as np
# Importing standard Qiskit libraries
from qiskit_aer import Aer
#from qiskit import QuantumCircuit, transpile, assemble, IBMQ, execute
from qiskit.quantum_info import Statevector
from qiskit.visualization import plot_bloch_multivector, plot_histogram
```

In [3]:
```
#|psi+>

# Create a Quantum Circuit with 2 qubits and 2 classical bits
qc = QuantumCircuit(2, 2)

# Step 1: Apply X gate on qubit 1 to flip it to |1>
qc.x(1)

# Step 2: Apply Hadamard gate on qubit 0 to create superposition
qc.h(0)

# Step 3: Apply CNOT gate with control qubit 0 and target qubit 1 to create entangl
qc.cx(0, 1)

# Step 4: Measure both qubits
qc.measure([0, 1], [0, 1])

# Draw the circuit
qc.draw('mpl')
```

Out[3]:

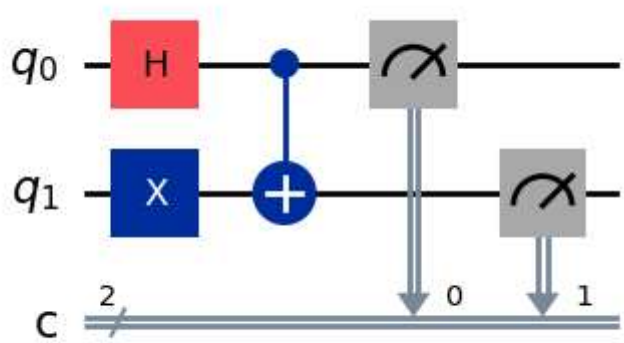

In [4]:
```
#|psi->

# Create a Quantum Circuit with 2 qubits and 2 classical bits
qc = QuantumCircuit(2, 2)

# Step 1: Apply X gate on qubit 1 to flip it to |1>
qc.x(1)

# Step 2: Apply Hadamard gate on qubit 0 to create superposition
qc.h(0)

# Step 3: Apply CNOT gate with control qubit 0 and target qubit 1 to create entangl
qc.cx(0, 1)

# Step 4: Apply Z gate on qubit 0 to introduce the phase needed for |psi->
qc.z(0)

# Step 5: Measure both qubits
qc.measure([0, 1], [0, 1])

# Draw the circuit
qc.draw('mpl')
```

Out[4]:

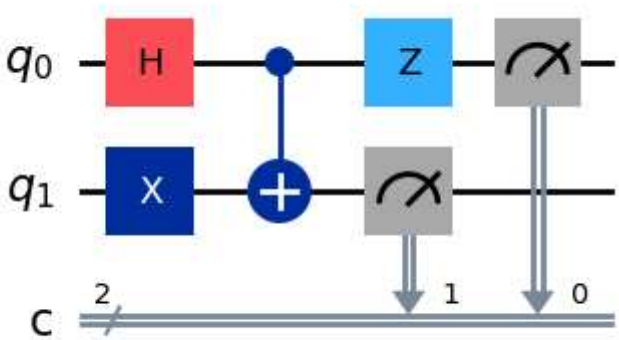

In [5]:
```
#|phi+>

# Create a Quantum Circuit with 2 qubits and 2 classical bits
qc = QuantumCircuit(2, 2)

# Step 1: Apply Hadamard gate on qubit 0 to create superposition
qc.h(0)

# Step 2: Apply CNOT gate with control qubit 0 and target qubit 1 to create entangl
qc.cx(0, 1)

# Step 3: Measure both qubits
qc.measure([0, 1], [0, 1])

# Draw the circuit
qc.draw('mpl')
```

Out[5]:

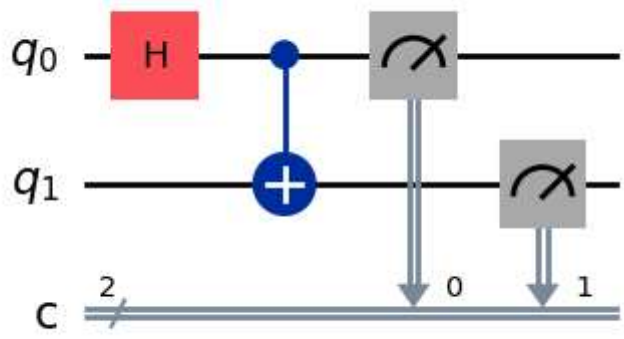

In [6]:

```
#|phi->

qc_phi_minus = QuantumCircuit(2, 2)

# Step 1: Apply Hadamard on qubit 0
qc_phi_minus.h(0)

# Step 2: Apply CNOT with control qubit 0, target qubit 1
qc_phi_minus.cx(0, 1)

# Step 3: Apply Z gate on qubit 0 to introduce the phase (minus sign)
qc_phi_minus.z(0)

# Step 4: Measure both qubits
qc_phi_minus.measure([0, 1], [0, 1])

# Draw the circuit
qc_phi_minus.draw('mpl')
```
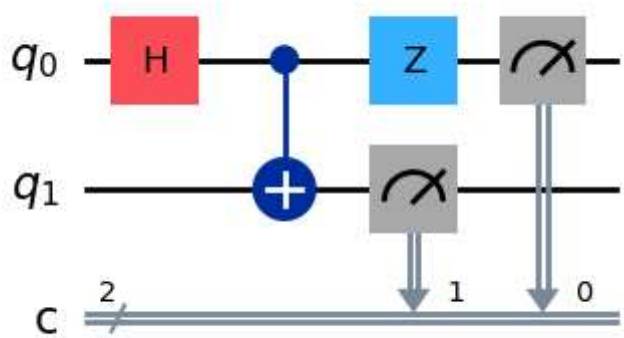
Out[6]: