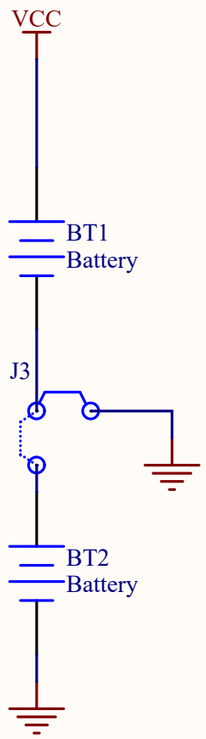

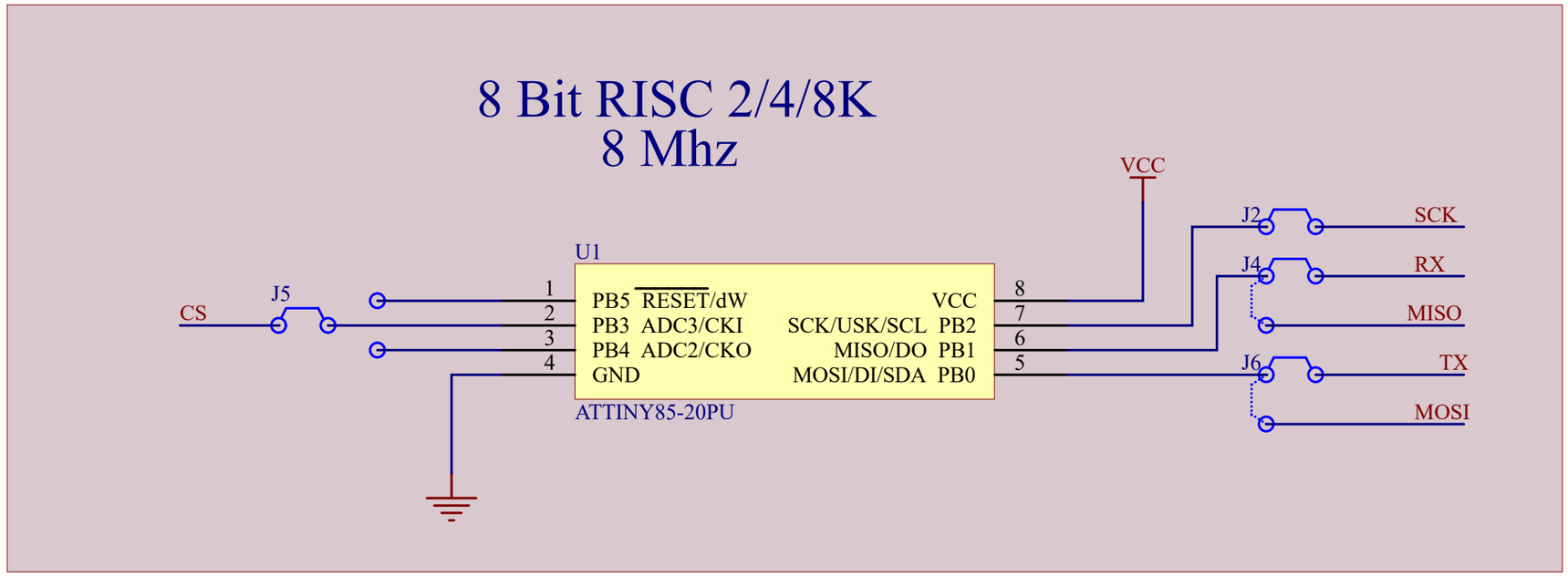

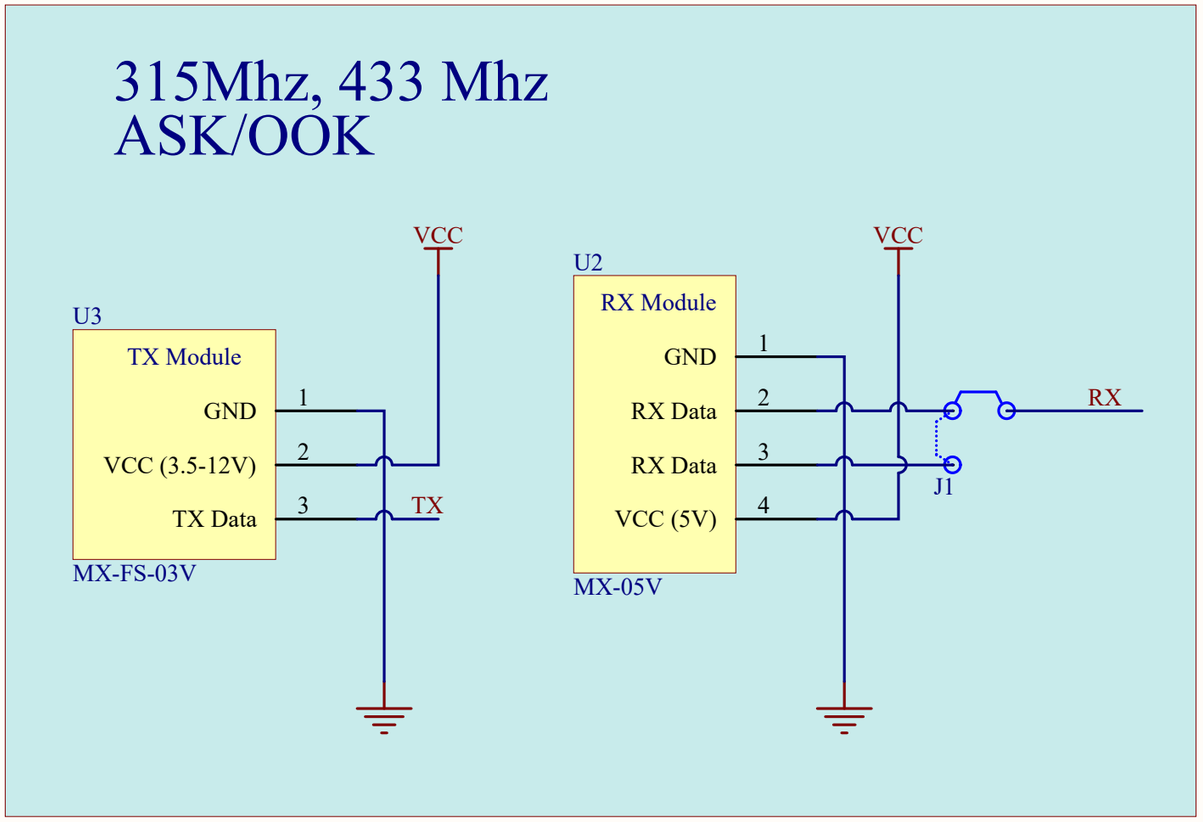

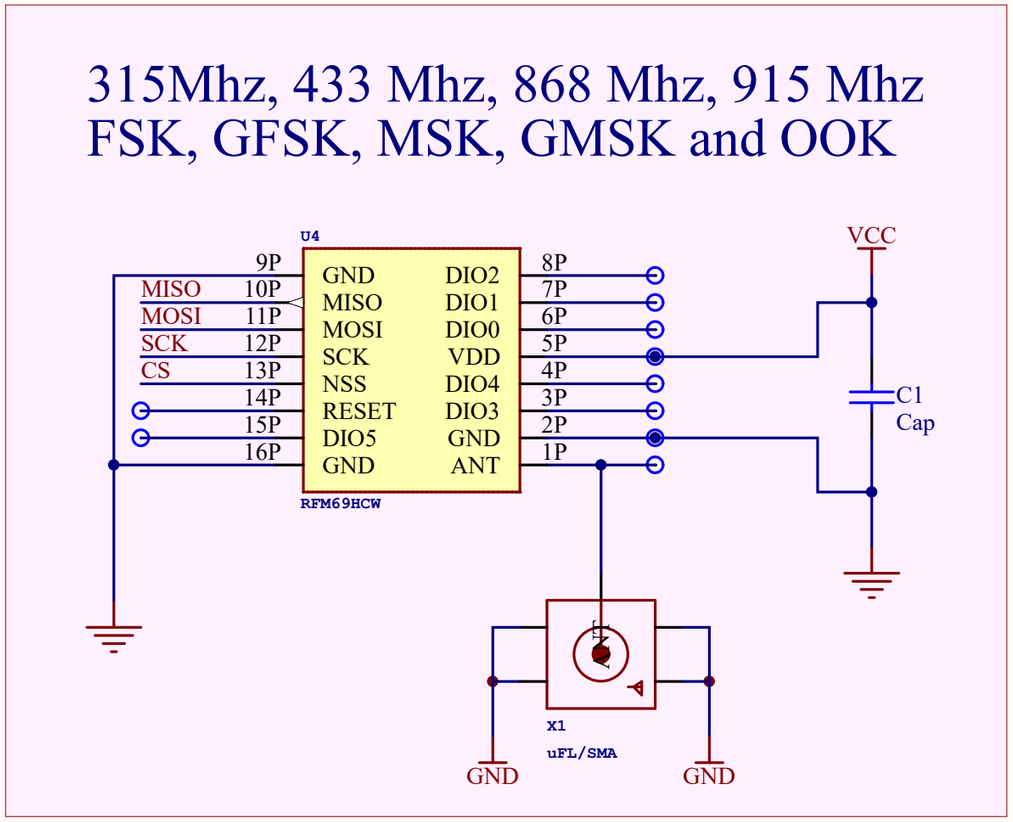

Title Offensive Summit RF Badge 2017		
Size A	Number	Revision 0
Date: 4/11/2017		Sheet 1 of 1
File: C:\Users\..\OS-RF-Badge-2017-Schematic.sch		Drawn By: j. eaton