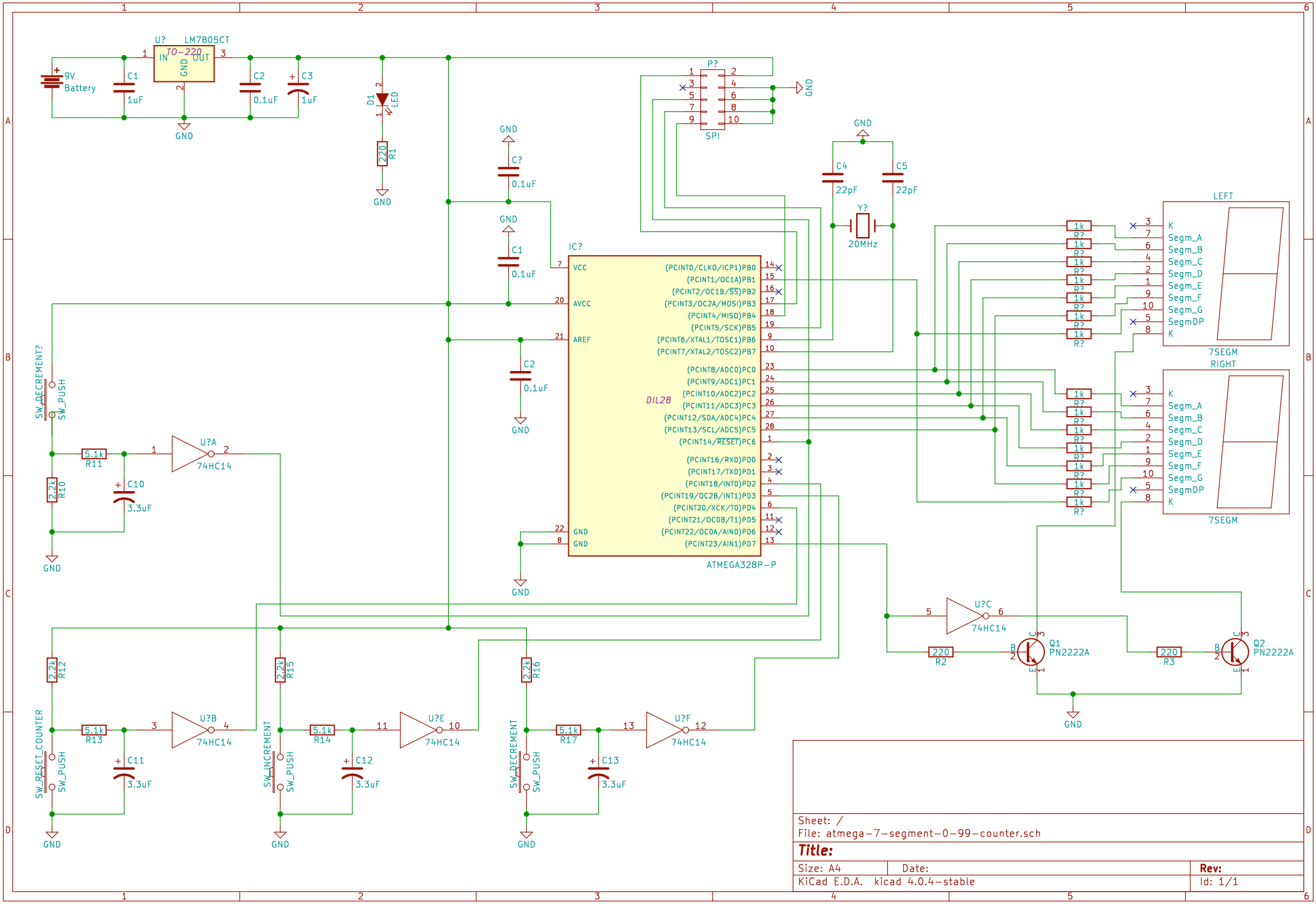
U? LM7805CT
TO-220
IN OUT GND
9V Battery
C1 1uF
C2 0.1uF
C3 1uF
GND
D1 LED
R1 220
P?
SPI
C4 22pF
C5 22pF
Y? 20MHz
C? 0.1uF
C1 0.1uF
C2 0.1uF
IC?
VCC
AVCC
AREF
GND
DIL28
ATMEGA328P-P
(PCINT0/CLKO/ICP1)PB0
(PCINT1/OC1A)PB1
(PCINT2/OC1B/SS)PB2
(PCINT3/OC2A/MOSI)PB3
(PCINT4/MISO)PB4
(PCINT5/SCK)PB5
(PCINT6/XTAL1/TOSC1)PB6
(PCINT7/XTAL2/TOSC2)PB7
(PCINT8/ADC0)PC0
(PCINT9/ADC1)PC1
(PCINT10/ADC2)PC2
(PCINT11/ADC3)PC3
(PCINT12/SDA/ADC4)PC4
(PCINT13/SCL/ADC5)PC5
(PCINT14/RESET)PC6
(PCINT16/RXD)PD0
(PCINT17/TXD)PD1
(PCINT18/INT0)PD2
(PCINT19/OC2B/INT1)PD3
(PCINT20/XCK/T0)PD4
(PCINT21/OC0B/T1)PD5
(PCINT22/OC0A/AIN0)PD6
(PCINT23/AIN1)PD7
LEFT
RIGHT
7SEGM
K
Segm_A
Segm_B
Segm_C
Segm_D
Segm_E
Segm_F
Segm_G
SegmDP
1k R?
SW_DECREMENT?
SW_PUSH
5.1k R11
2.2k R10
C10 3.3uF
U?A 74HC14
SW_RESET_COUNTER
5.1k R13
2.2k R12
C11 3.3uF
U?B 74HC14
SW_INCREMENT
5.1k R14
2.2k R15
C12 3.3uF
U?E 74HC14
SW_DECREMENT
5.1k R17
2.2k R16
C13 3.3uF
U?F 74HC14
U?C 74HC14
220 R2
220 R3
Q1 PN2222A
Q2 PN2222A
Sheet: /
File: atmega-7-segment-0-99-counter.sch
Title:
Size: A4
Date:
Rev:
KiCad E.D.A. kicad 4.0.4-stable
Id: 1/1