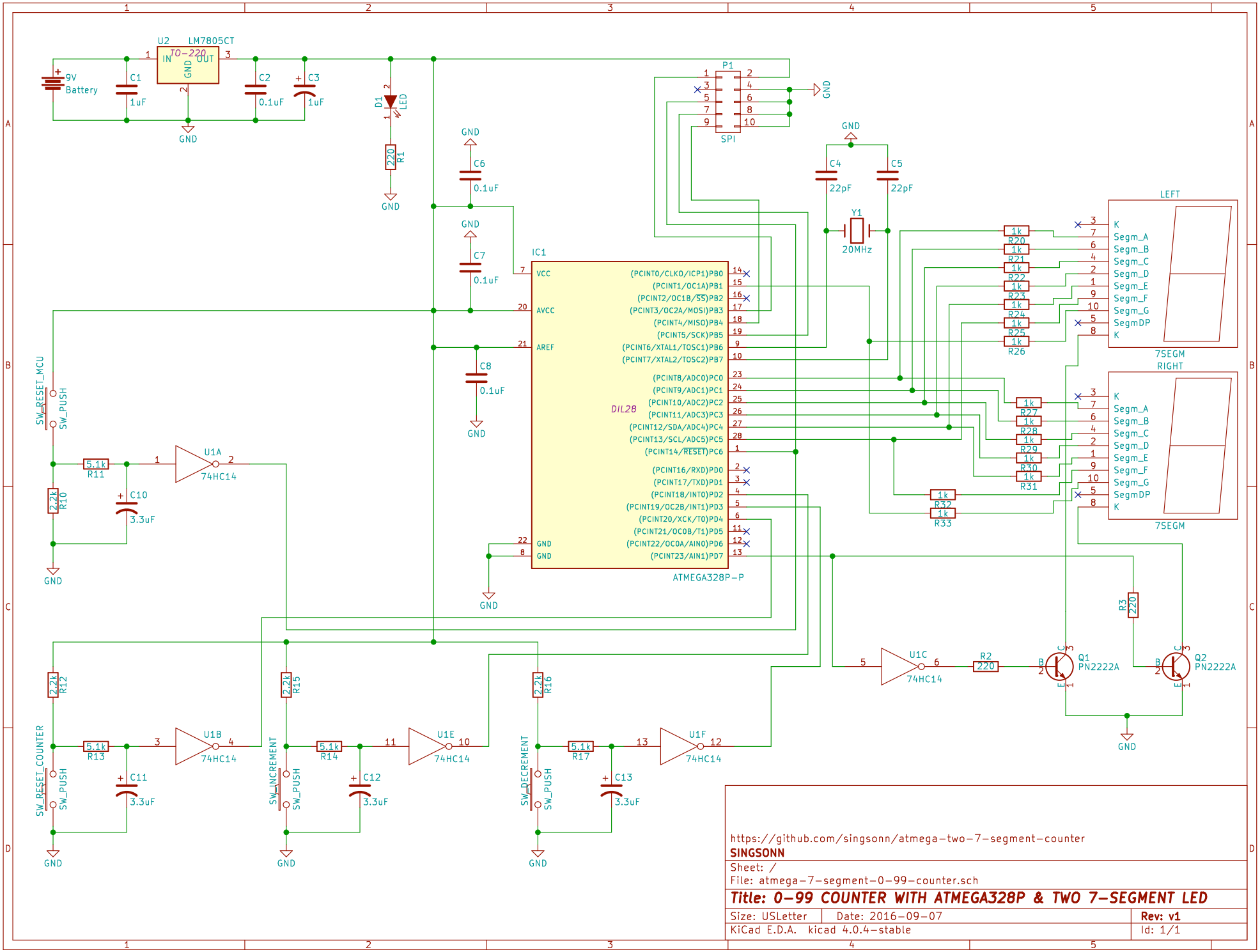

https://github.com/singsonn/atmega-two-7-segment-counter

SINGSONN

Sheet: /

File: atmega-7-segment-0-99-counter.sch

Title: 0-99 COUNTER WITH ATMEGA328P & TWO 7-SEGMENT LED

Size: USLetter	Date: 2016-09-07	**Rev: v1**
KiCad E.D.A. kicad 4.0.4-stable		Id: 1/1