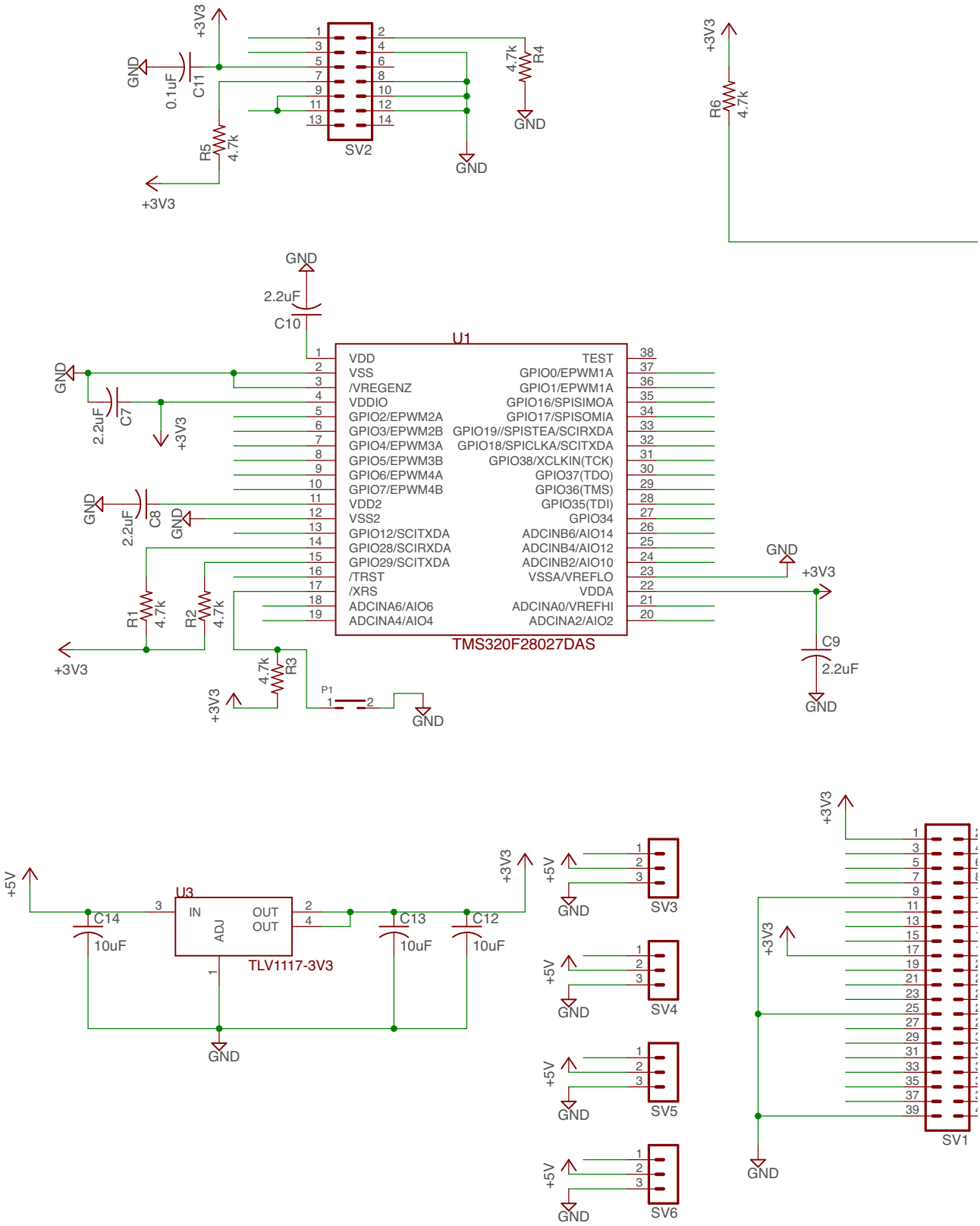
+3V3
GND
0.1uF
C11
R5
4.7k
SV2
R4
4.7k
R6
4.7k
2.2uF
C10
U1
VDD
VSS
/VREGENZ
VDDIO
GPIO2/EPWM2A
GPIO3/EPWM2B
GPIO4/EPWM3A
GPIO5/EPWM3B
GPIO6/EPWM4A
GPIO7/EPWM4B
VDD2
VSS2
GPIO12/SCITXDA
GPIO28/SCIRXDA
GPIO29/SCITXDA
/TRST
/XRS
ADCINA6/AIO6
ADCINA4/AIO4
TEST
GPIO0/EPWM1A
GPIO1/EPWM1A
GPIO16/SPISIMOA
GPIO17/SPISOMIA
GPIO19//SPISTEA/SCIRXDA
GPIO18/SPICLKA/SCITXDA
GPIO38/XCLKIN(TCK)
GPIO37(TDO)
GPIO36(TMS)
GPIO35(TDI)
GPIO34
ADCINB6/AIO14
ADCINB4/AIO12
ADCINB2/AIO10
VSSA/VREFLO
VDDA
ADCINA0/VREFHI
ADCINA2/AIO2
TMS320F28027DAS
C7
C8
R1
R2
R3
P1
C9
+5V
U3
IN
OUT
OUT
ADJ
TLV1117-3V3
C14
C13
C12
10uF
SV3
SV4
SV5
SV6
SV1

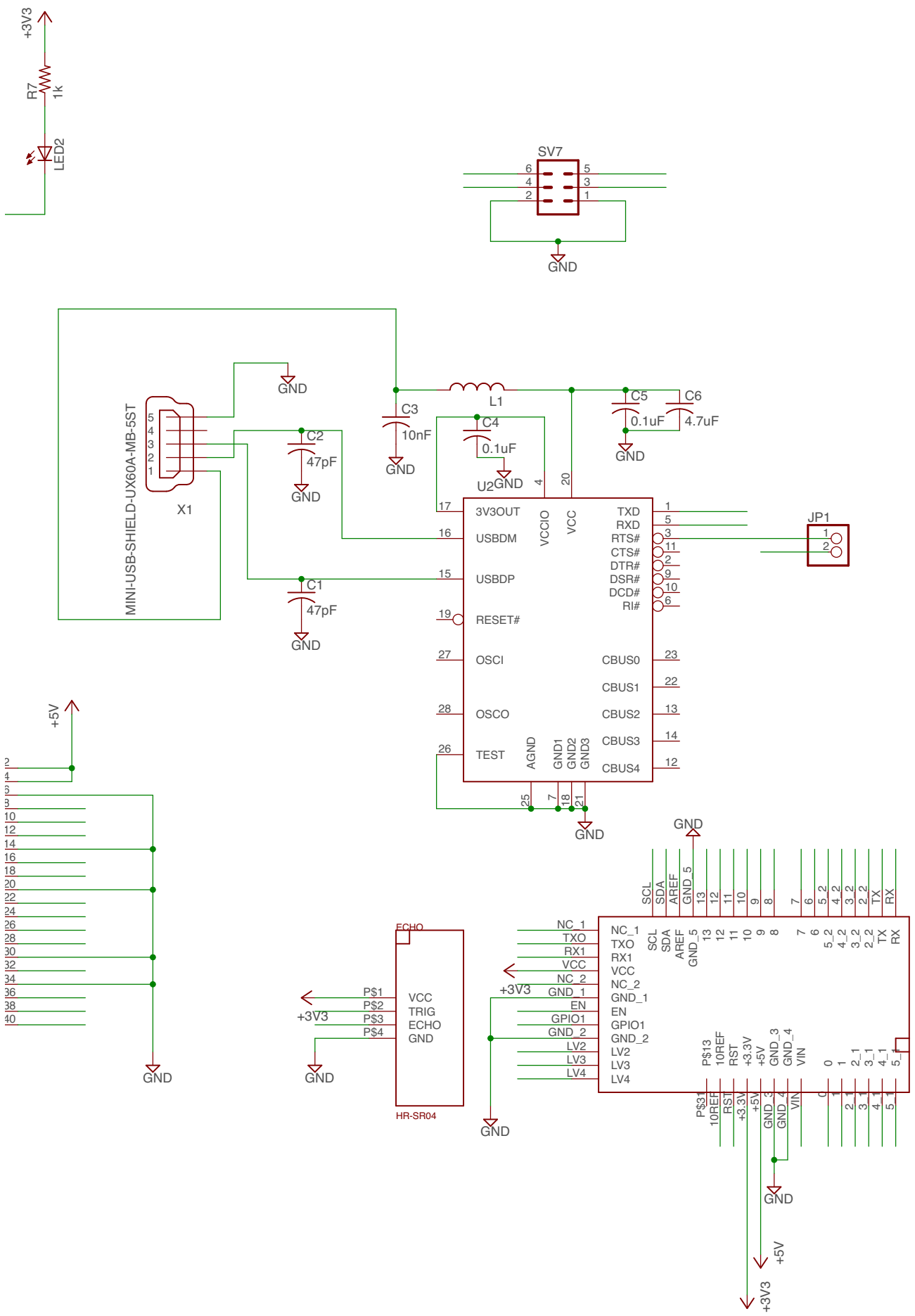
+3V3
R7
1k
LED2
SV7
GND
MINI-USB-SHIELD-UX60A-MB-5ST
X1
C2
47pF
C1
47pF
C3
10nF
L1
C4
0.1uF
C5
0.1uF
C6
4.7uF
U2
3V3OUT
USBDM
USBDP
RESET#
OSCI
OSCO
TEST
VCCIO
VCC
AGND
GND1
GND2
GND3
TXD
RXD
RTS#
CTS#
DTR#
DSR#
DCD#
RI#
CBUS0
CBUS1
CBUS2
CBUS3
CBUS4
JP1
+5V
ECHO
VCC
TRIG
ECHO
GND
P$1
P$2
P$3
P$4
HR-SR04
NC_1
TXO
RX1
VCC
NC_2
GND_1
EN
GPIO1
GND_2
LV2
LV3
LV4
SCL
SDA
AREF
GND_5
13
12
11
10
9
8
7
6
5_2
4_2
3_2
2_2
TX
RX
P$13
10REF
RST
+3.3V
+5V
GND_3
GND_4
VIN
0
1
2_1
3_1
4_1
5_1
P$31