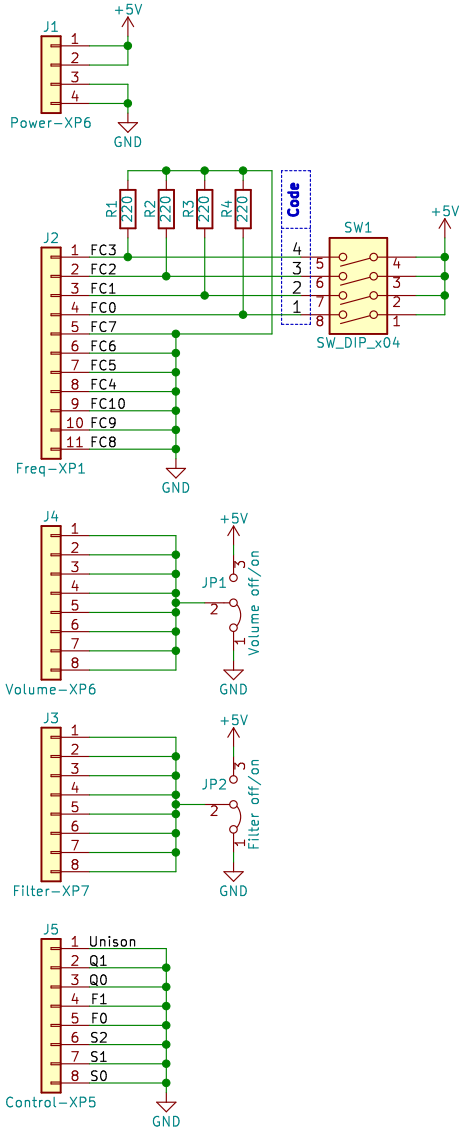

DIP-Code				Frequency
1	2	3	4	
0	0	1	0	33 Hz
0	1	1	0	65 Hz
0	0	0	1	127 Hz
0	1	0	1	250 Hz
0	0	1	1	500 Hz
0	1	1	1	1000 Hz
1	1	1	1	1122 Hz

First set 0111, tune to 1000 Hz.

By SinTech

Sheet: /
File: P432OscTest.sch

Title: Formanta P432 Oscillator tester

Size: A4	Date: 2020-03-31	Rev:
KiCad E.D.A. kicad (5.1.5)-3		Id: 1/1