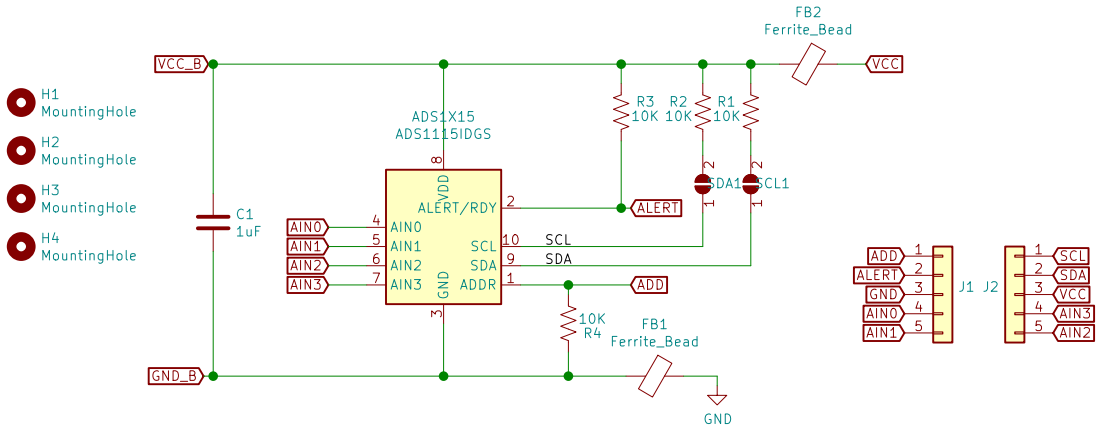

ADS1015
ADS1115
AnalogSensors
SirBoard
www.SirBoard.com

Sheet: /
File: ADS1X15.sch

Title: ADS1X15 Based 12/16 Bit 4-Channel I2C ADC

Size: User	Date: 2019-12-18	**Rev: 1**
KiCad E.D.A. kicad (5.1.2)-2		Id: 1/1