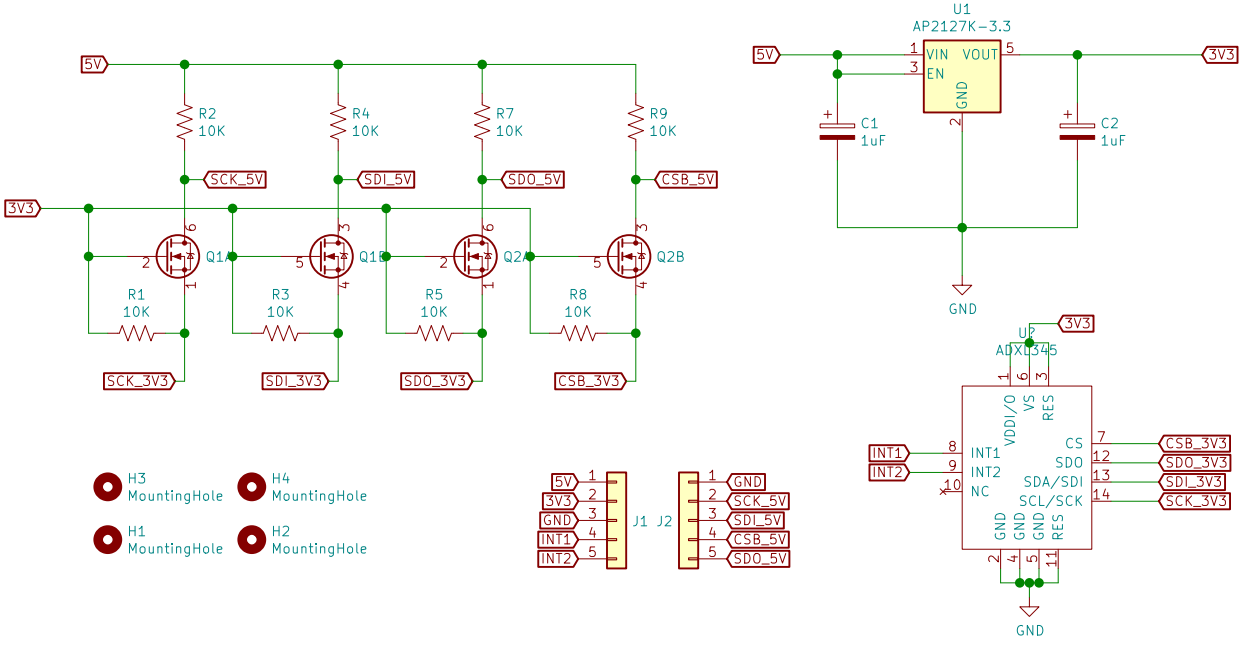

ADXL345
±2g, ±4g, ±8g, ±16g
Digital 10bit/13 bit I2C/SPI Accelerometer
SirBoard

Sheet: /
File: ADXL345.sch

Title: ADXL345 Breakout with 5V Level Shift

Size: User	Date: 2019-12-11	**Rev: 2**
KiCad E.D.A. kicad (5.1.2)-2		Id: 1/1