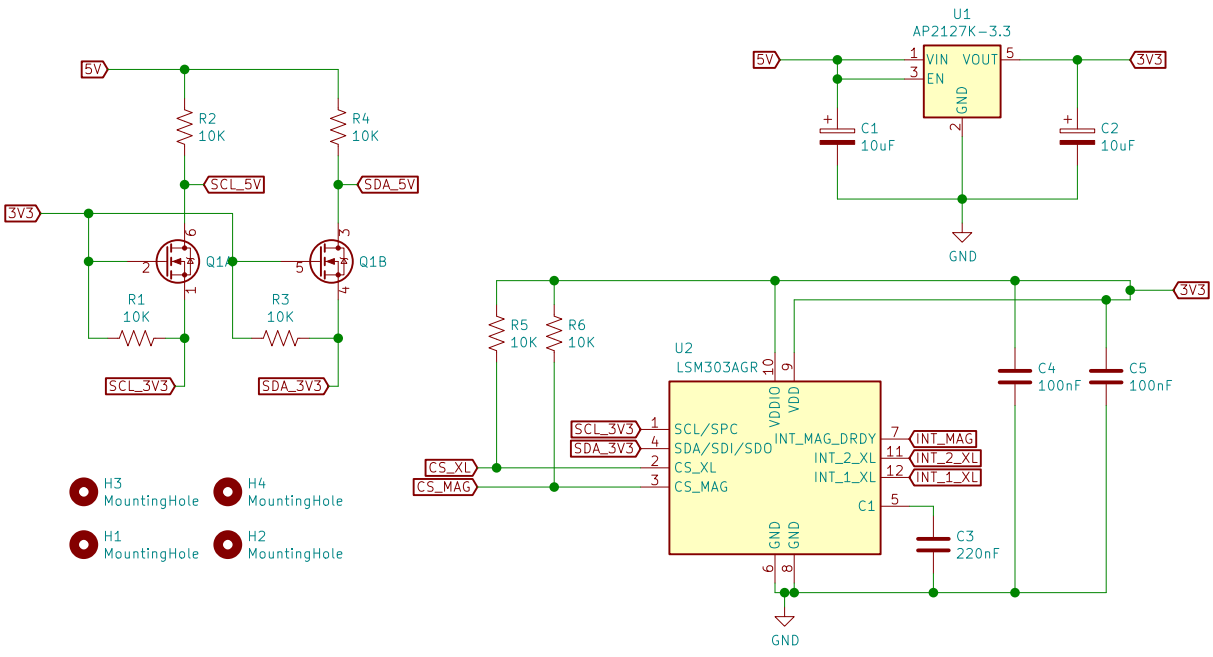

LSM303AGR
Accelerometer: ±2g, ±4g, ±8g, ±16g
Magnetometer: ±50Gauss
Digital 16 bit I2C/SPI Accelerometer And Magnetometer
SirBoard

Sheet: /
File: LSM303.sch

Title: LSM303AGR Breakout with 5V Level Shift

Size: User	Date: 2019-12-20	**Rev: 1**
KiCad E.D.A. kicad (5.1.2)-2		Id: 1/1