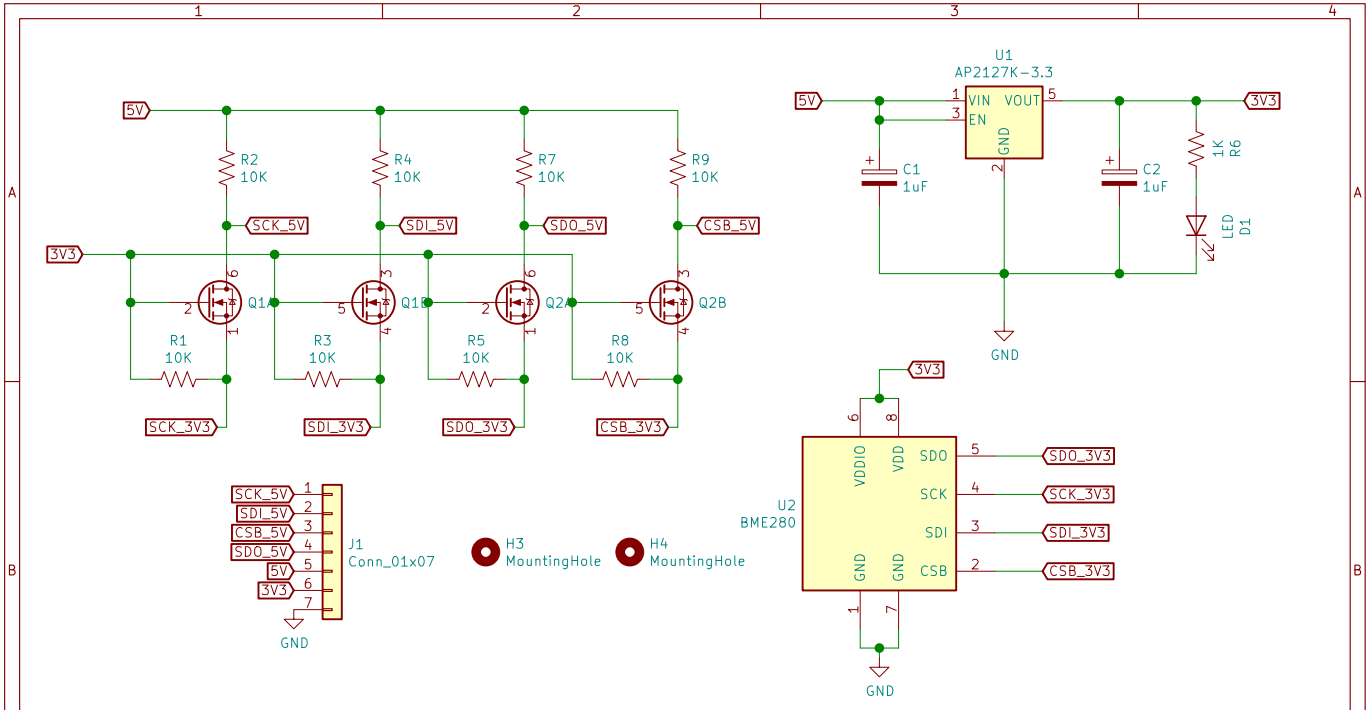

BME280
Temperature, Pressure and Humidity Sensor
SirBoard

Sheet: /
File: BME280.sch

Title: BME280 Breakout with 5V Level Shift

Size: User	Date: 2019-11-04	**Rev: 1**
KiCad E.D.A. kicad (5.1.2)-2		Id: 1/1