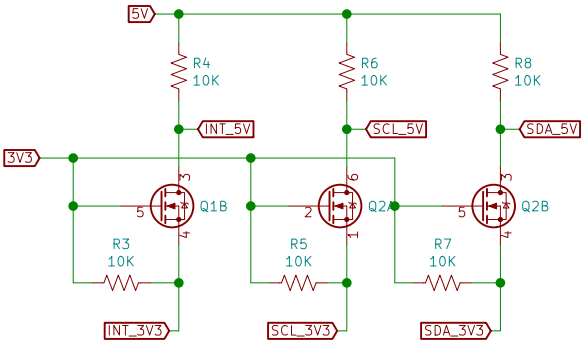

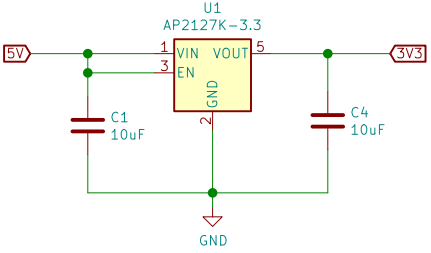

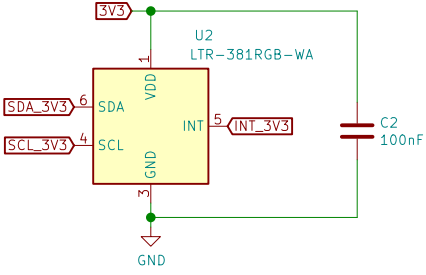

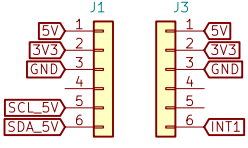

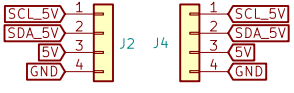

LTR-381RGB - SirBlue
Digital Ambient Light, Colour and Infrared Sensor with I2C
Programmable 16 to 20 Bit Output
Automatic rejection for 50Hz/60Hz lighting
SirBoard

Sheet: /
File: LTR_381.sch

Title: LTR-381RGB Breakout with 5V Level Shift

Size: User	Date: 2020-01-29	**Rev: 1**
KiCad E.D.A. kicad (5.1.2)-2		Id: 1/1