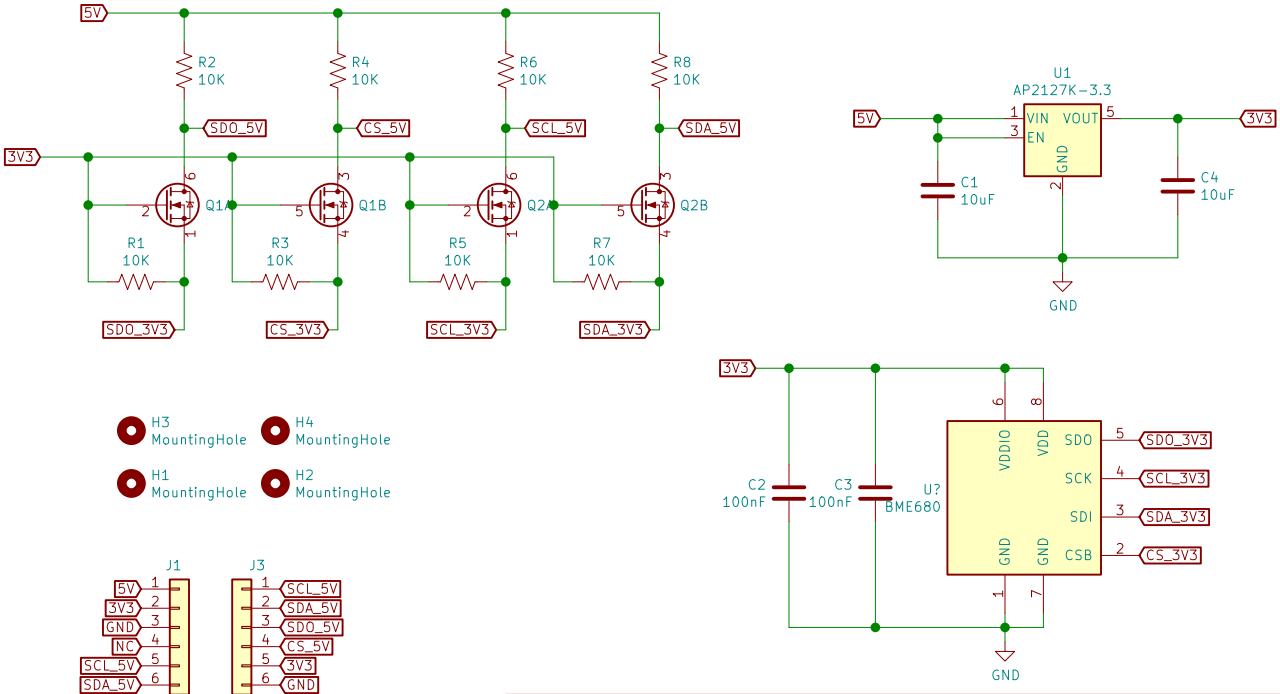

BME680 – SirBlue
Temperature, Pressure, Humidity and VOC Sensor
www.SirBoard.com
SirBoard

Sheet: /
File: BME680.sch

Title: BME680 Breakout with 5V Level Shift

Size: User	Date: 2020-01-21	**Rev: 2**
KiCad E.D.A. kicad (5.1.2)-2		Id: 1/1