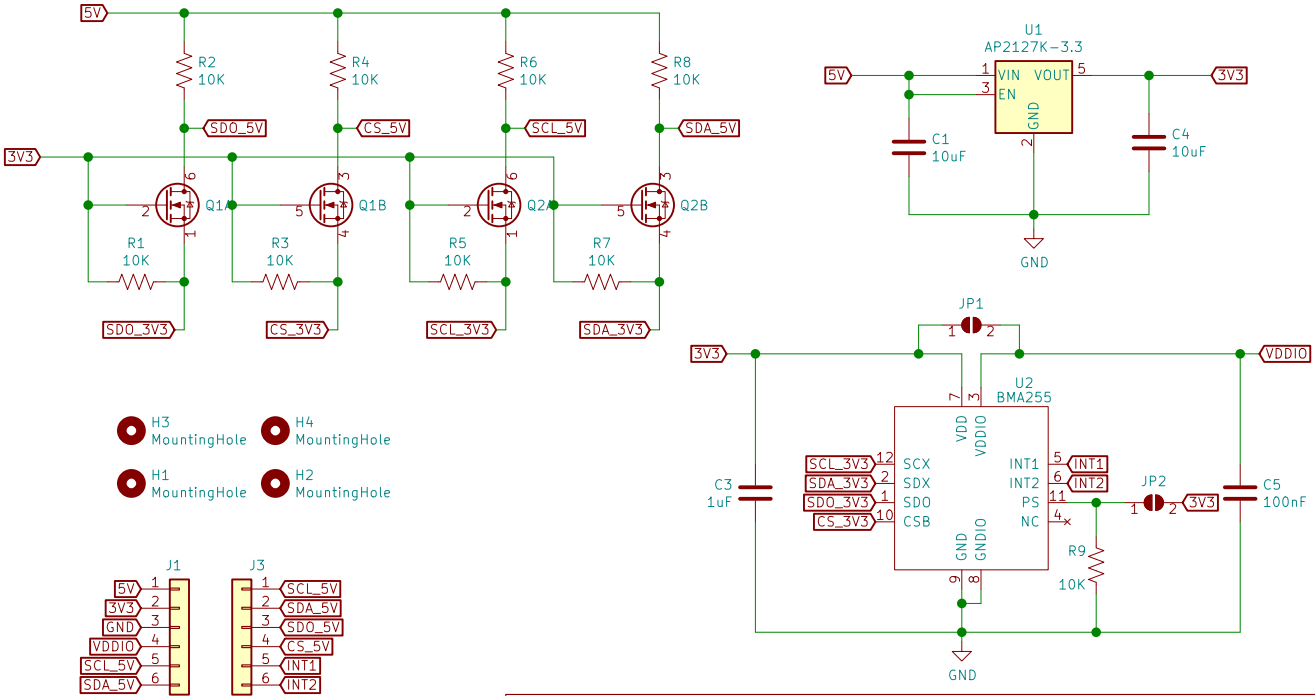

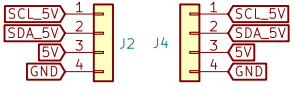

BMA255 – SirBlue
Digital 12 Bit Accelerometer with I2C and SPI
Accelerometer = ±4g/ ±8g/ ±12g/ ±16g
SirBoard

Sheet: /
File: BMA255.sch

Title: BMA255 Breakout with 5V Level Shift

Size: User	Date: 2020-03-07	**Rev: 1**
KiCad E.D.A. kicad (5.1.2)-2		Id: 1/1