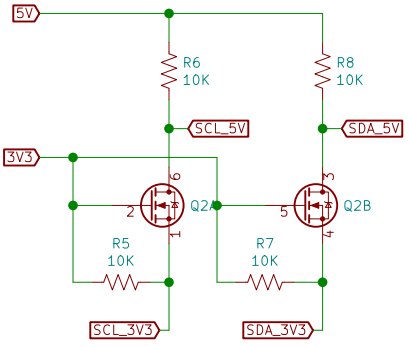

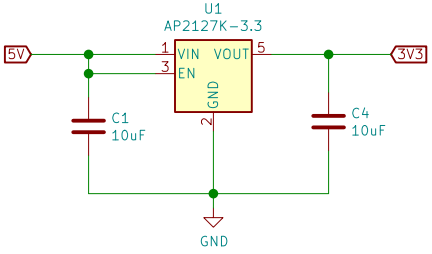

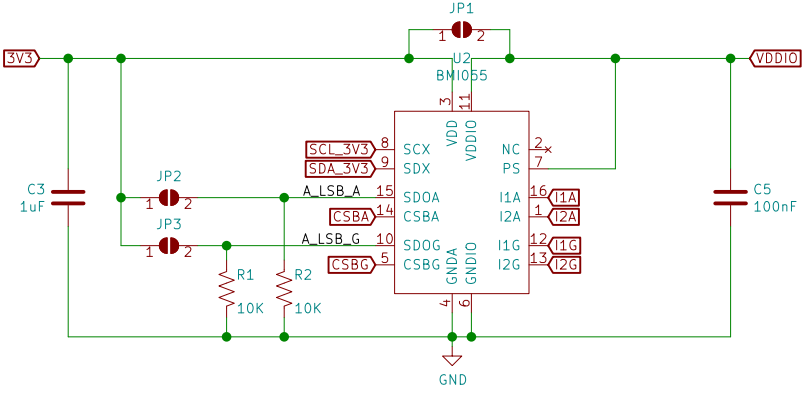

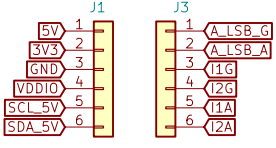

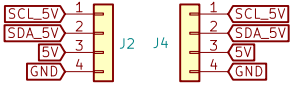

BMI055 – SirBlue
Digital 16 Bit Gyroscope And 12 Bit Accelerometer Optimised For I2C
Accelerometer = ±4g/ ±8g/ ±12g/ ±16g
Gyroscope = ±125°/s, ±250°/s, ±500°/s, ±1000°/s, ±2000°/s
SirBoard

Sheet: /
File: BMI055.sch

Title: BMI055 Breakout with 5V Level Shift

Size: User	Date: 2020-03-08	**Rev: 1**
KiCad E.D.A. kicad (5.1.2)-2		Id: 1/1