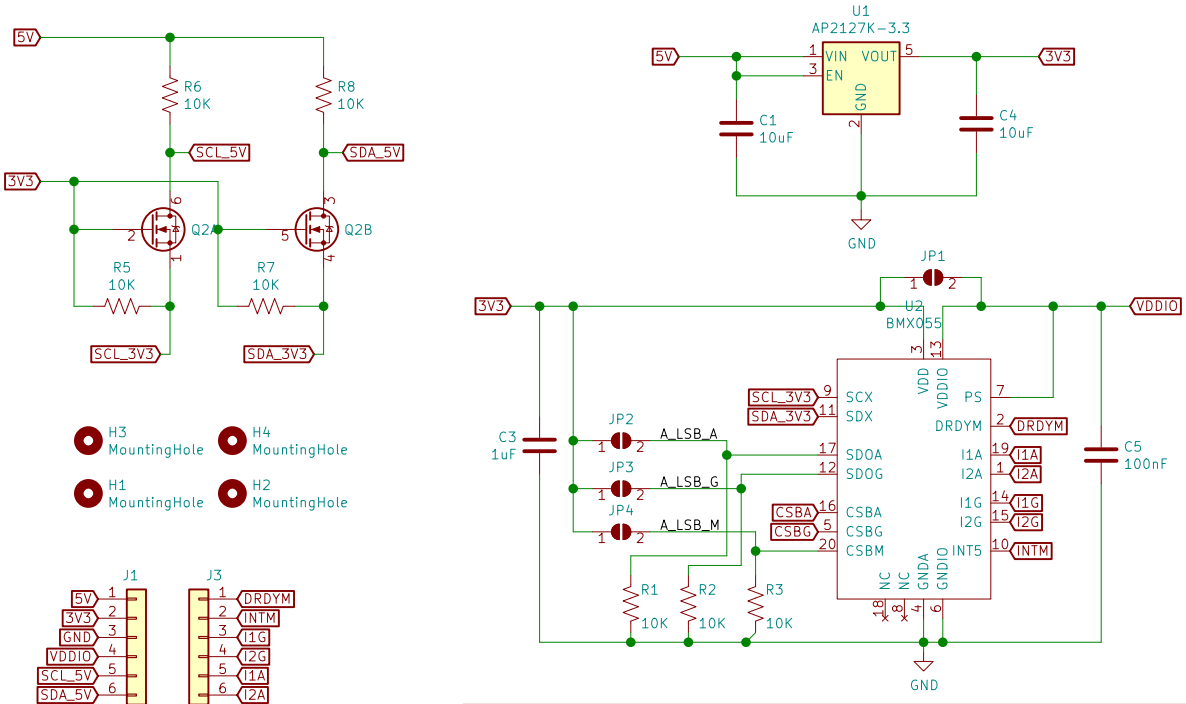

16 Bit Gyroscope, 12 Bit Accelerometer And 13/15 Bit Magnetometer Optimised For I2C
Accelerometer = ±4g/ ±8g/ ±12g/ ±16g
Gyroscope = ±125°/s, ±250°/s, ±500°/s, ±1000°/s, ±2000°/s
Magnetometer: X = ±1300µT, Y = ±1300µT, Z = ±2500µT

SirBoard

Sheet: /
File: BMX055.sch

Title: SirBlue – BMX055 Breakout with 5V Level Shift

Size: User	Date: 2020-03-08	**Rev: 1**
KiCad E.D.A. kicad (5.1.2)-2		Id: 1/1