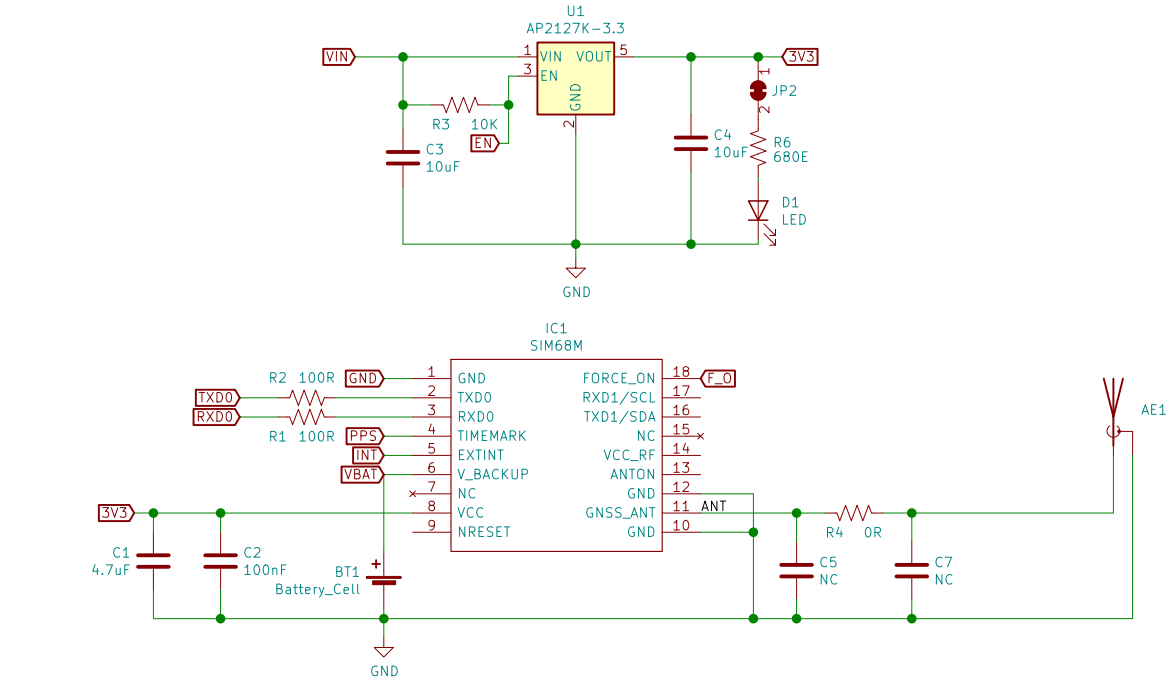

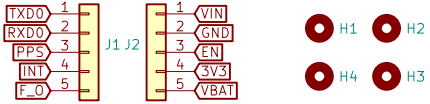

Breadboard Friendly Micro GPS+GNSS Module
SIM68ML is based on the MT3333 Chipset
SirBoard

Sheet: /
File: SIM68ML.sch

Title: SIM68ML Based GPS+GNSS Module

Size: User	Date: 2020-05-13	**Rev: 2**
KiCad E.D.A. kicad (5.1.2)-2		Id: 1/1