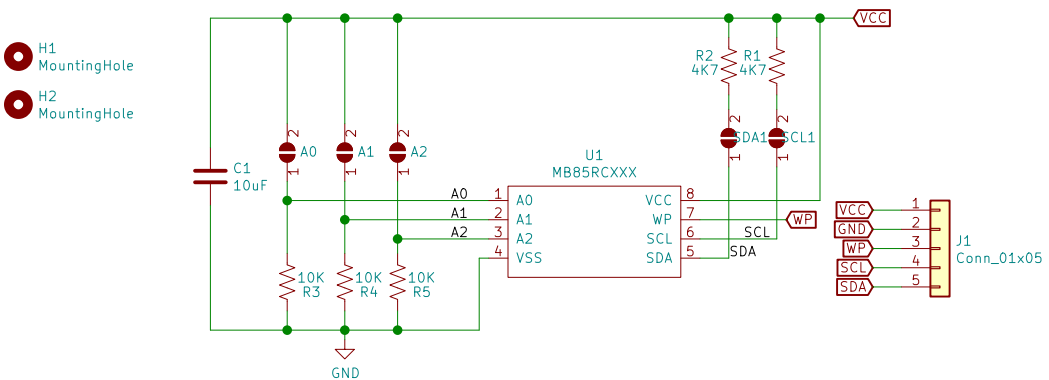

MB85RC64, MB85RC128, MB85RC256, MB85RC512, MB85RC1M
SirKeep
SirBoard
www.SirBoard.com

Sheet: /
File: MB85RCXXX.sch

Title: MB85RCXXX Based FRAM Module

Size: User	Date: 2019-12-06	**Rev: 1**
KiCad E.D.A. kicad (5.1.2)-2		Id: 1/1