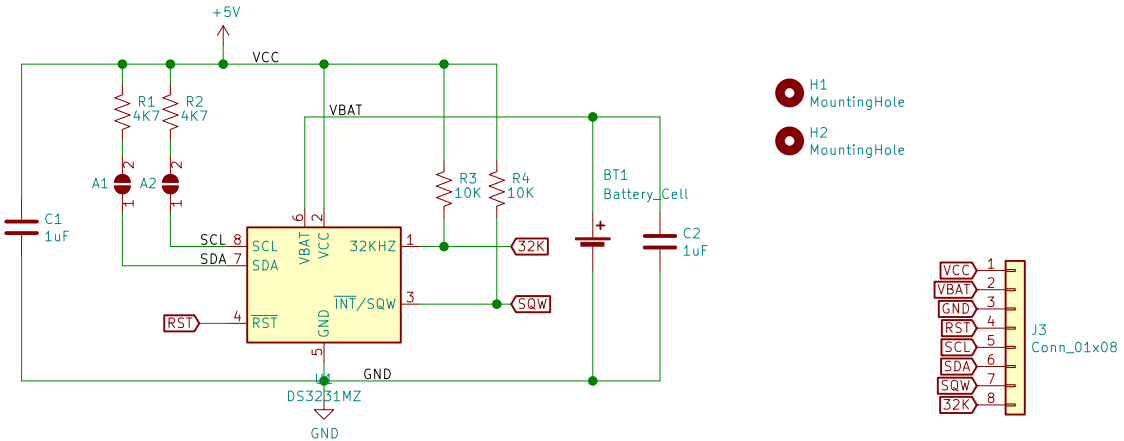

DS3231MZ+
±5ppm Accuracy RTC with internal MEMS oscillator
SirBoard – SirTime
www.SirBoard.com

Sheet: /
File: DS3231M.sch

Title: DS3231MZ+ Based Real Time Clock

Size: User	Date: 2019-12-12	**Rev: 1**
KiCad E.D.A. kicad (5.1.2)-2		Id: 1/1