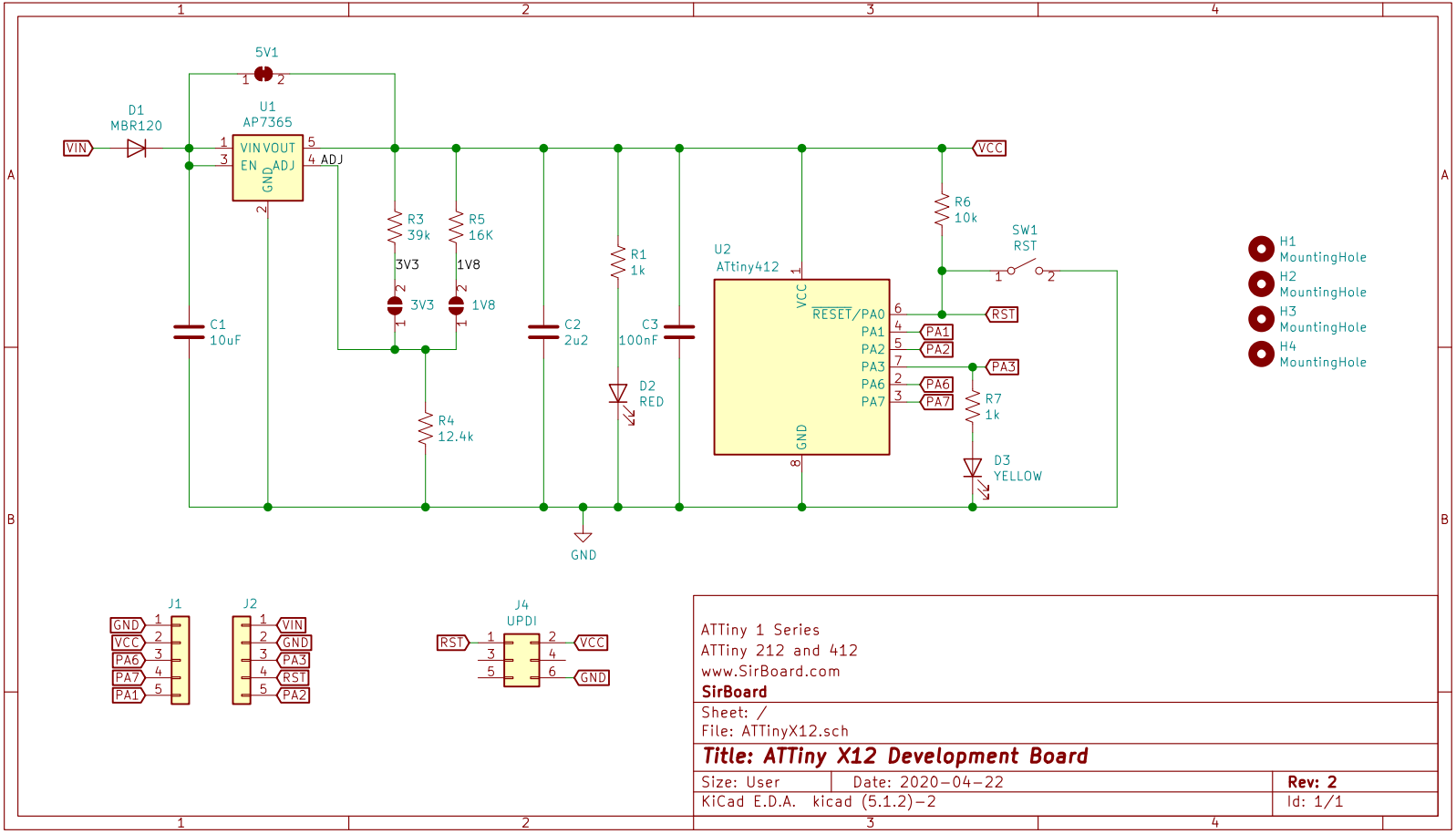
5V1
D1
MBR120
U1
AP7365
VIN
VOUT
EN
ADJ
GND
ADJ
R3
39k
R5
16K
3V3
1V8
3V3
1V8
R4
12.4k
C1
10uF
C2
2u2
R1
1k
C3
100nF
D2
RED
U2
ATtiny412
VCC
RESET/PA0
PA1
PA2
PA3
PA6
PA7
GND
R6
10k
SW1
RST
R7
1k
D3
YELLOW
H1
MountingHole
H2
MountingHole
H3
MountingHole
H4
MountingHole
GND
J1
J2
J4
UPDI
ATTiny 1 Series
ATTiny 212 and 412
www.SirBoard.com
SirBoard
Sheet: /
File: ATTinyX12.sch
Title: ATTiny X12 Development Board
Size: User
Date: 2020-04-22
Rev: 2
KiCad E.D.A. kicad (5.1.2)-2
Id: 1/1