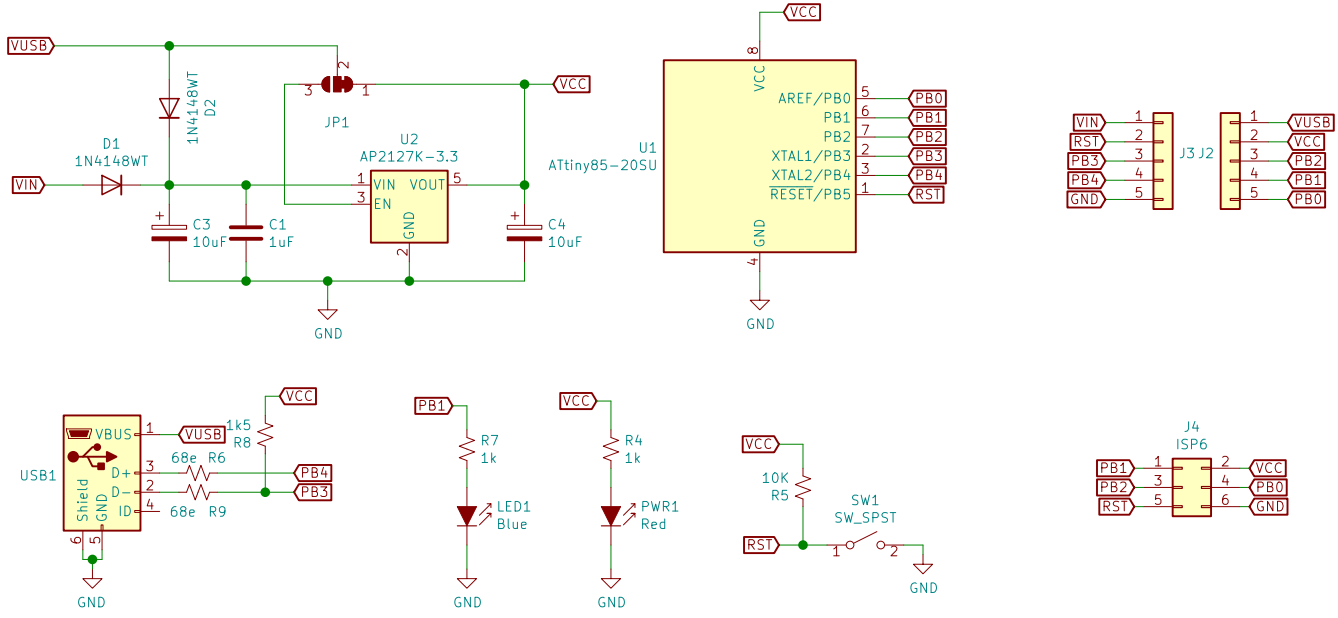

ATTiny85 Based Dev Board
www.SirBoard.com
SirBoard

Sheet: /
File: ATTiny85.sch

Title: SirTiny-85

Size: User	Date: 2019-07-22	**Rev: 1**
KiCad E.D.A. kicad (5.1.2)-2		Id: 1/1