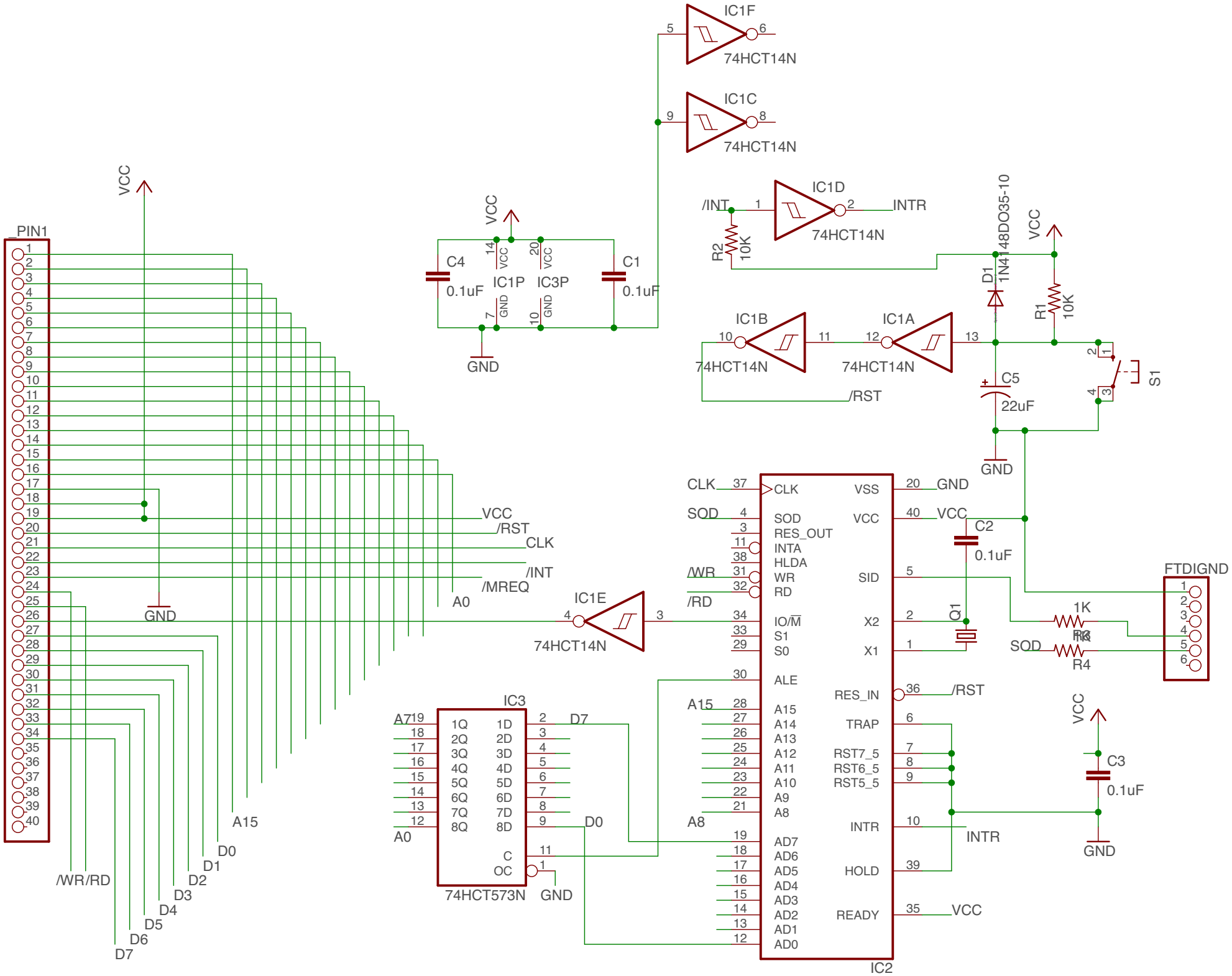
IC1F
74HCT14N
IC1C
74HCT14N
IC1D
74HCT14N
/INT
INTR
R2
10K
1N4148DO35-10
D1
R1
10K
VCC
IC1B
74HCT14N
IC1A
74HCT14N
/RST
C5
22uF
GND
S1
C4
0.1uF
IC1P
IC3P
C1
0.1uF
PIN1
VCC
/RST
CLK
/INT
/MREQ
A0
GND
IC1E
74HCT14N
CLK
SOD
/WR
/RD
IC2
VSS
VCC
SID
X2
X1
RES_IN
TRAP
RST7_5
RST6_5
RST5_5
INTR
HOLD
READY
RES_OUT
INTA
HLDA
WR
RD
IO/M
S1
S0
ALE
A15
A14
A13
A12
A11
A10
A9
A8
AD7
AD6
AD5
AD4
AD3
AD2
AD1
AD0
C2
0.1uF
Q1
FTDIGND
1K
R3
SOD
R4
C3
0.1uF
IC3
74HCT573N
A7
A0
D7
D0
/WR/RD
D6
D5
D4
D3
D2
D1
D0
A15