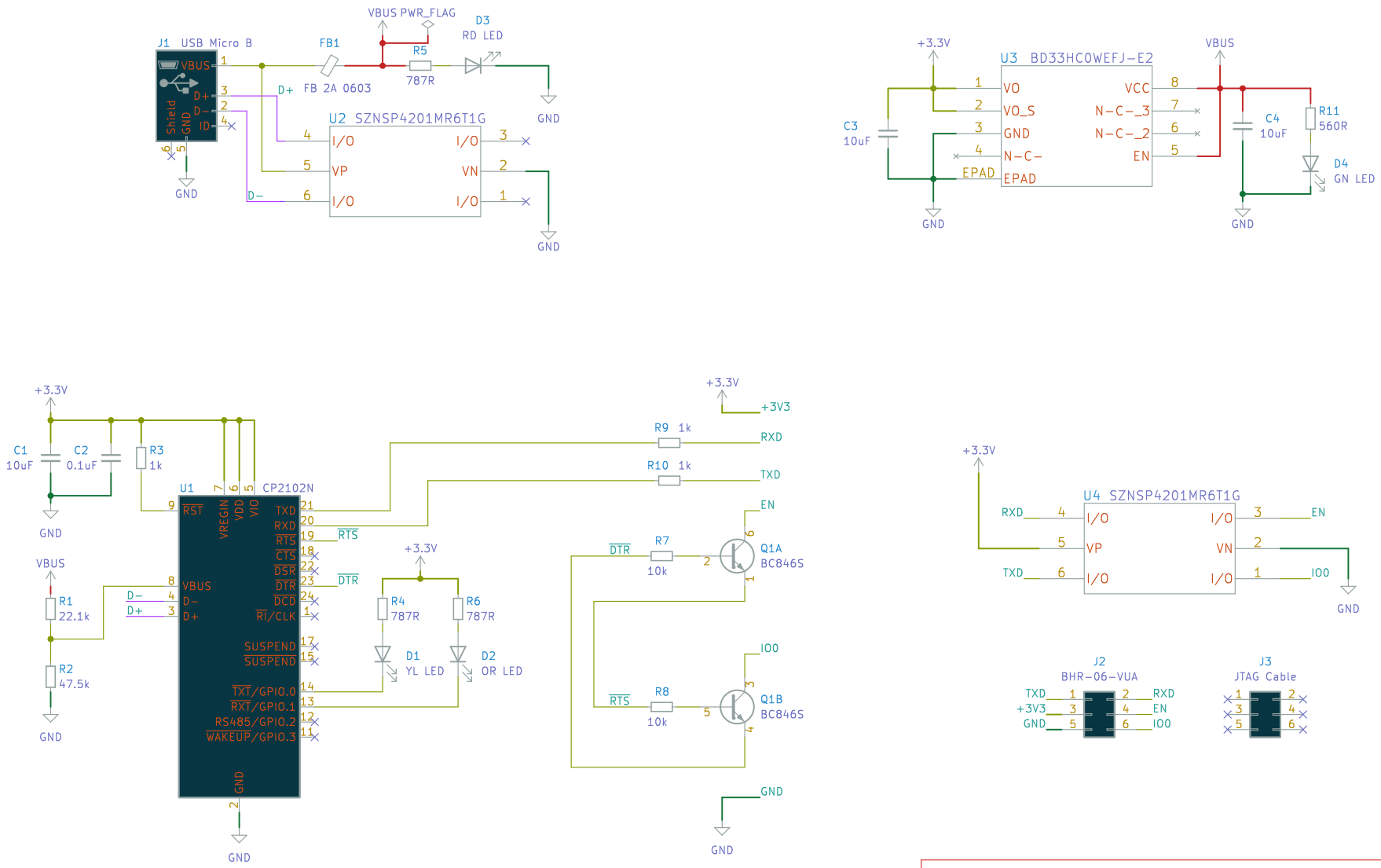

ESP32 USB UART Programmer

Siriuspal

Sheet: /

File: ESPProgrammer.kicad_sch

Title: ESP Programmer

Size: A4	Date: 2021−12−26	**Rev: 1.0**
KiCad E.D.A. kicad (6.0.0)		Id: 1/1