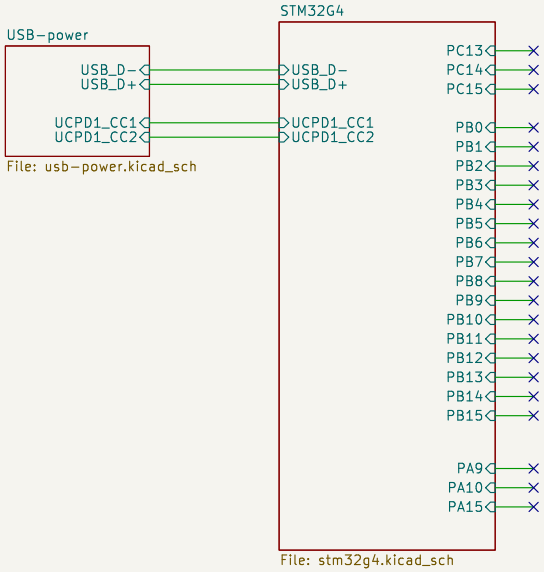

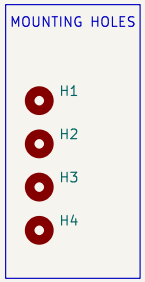

Sheet: /
File: STM32G431CBT6-project-template.kicad_sch

Title:

Size: A4	Date:	**Rev:**
KiCad E.D.A. 8.0.6		Id: 1/3

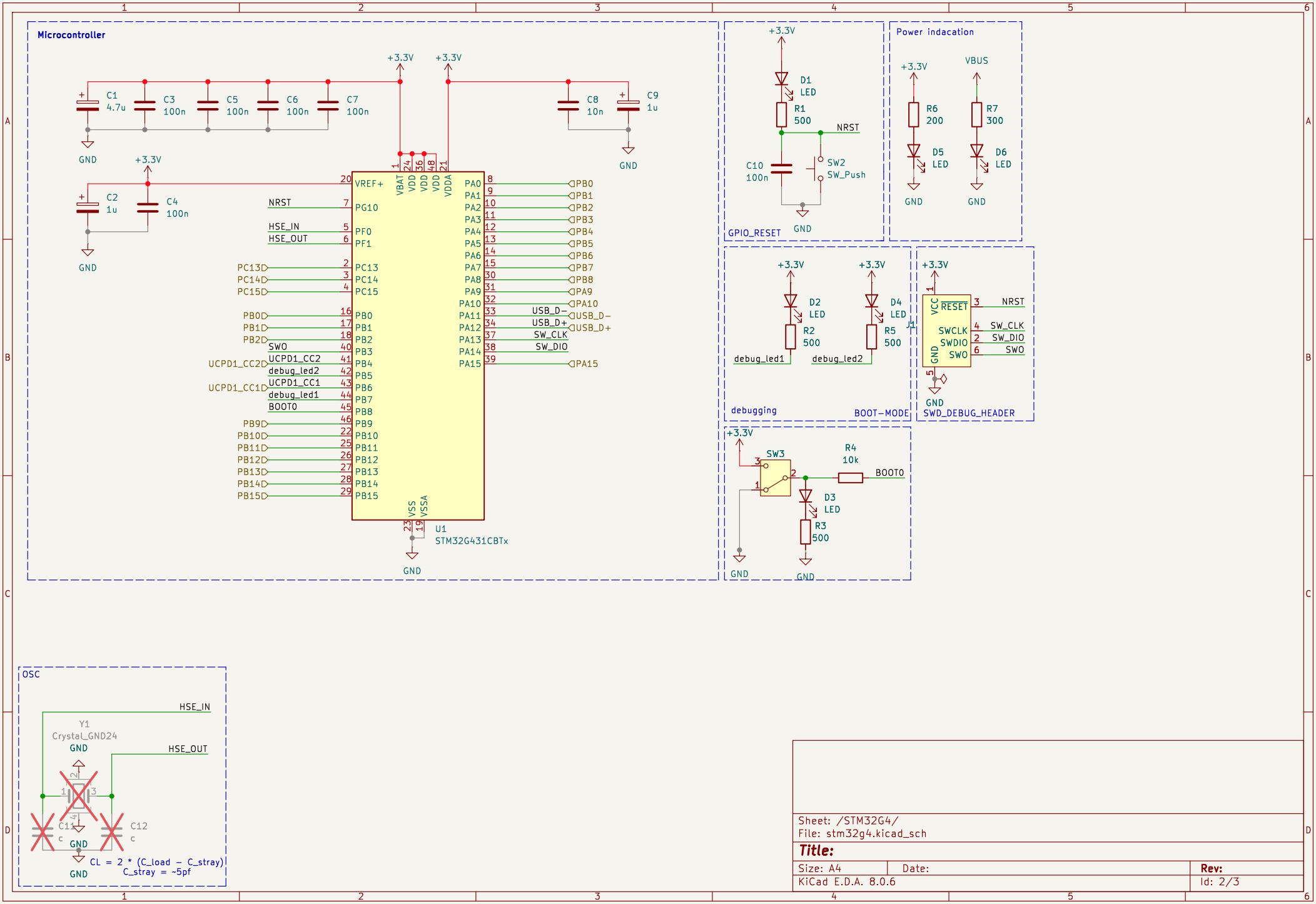

Sheet: /STM32G4/
File: stm32g4.kicad_sch

Title:

Size: A4	Date:	Rev:
KiCad E.D.A. 8.0.6		Id: 2/3

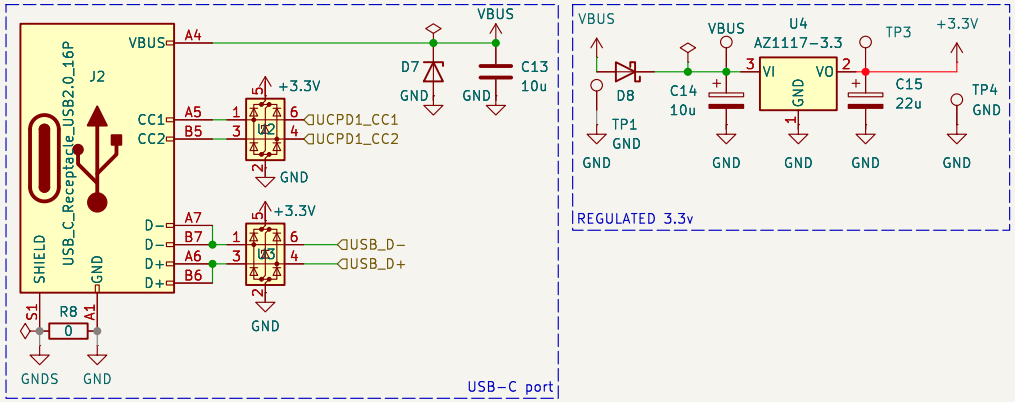

Sheet: /USB−power/
File: usb−power.kicad_sch

Title:

Size: A4	Date:	Rev:
KiCad E.D.A. 8.0.6		Id: 3/3