USE:
1.
MESURE "VOLTAGE FEEDBACK" and take its
max for the negitive rail
min for the positive rail
and set "V_OFFSET" on the given side to that value

2.
MESURE "DIIF BASE" and make sure its max value is
−15V for the negitive side
+15V for the positive side
turing RV3/4 as needed

3.
MESURE the output voltage across a dummy load
set the 100x gain trimmer to shrink the crossing

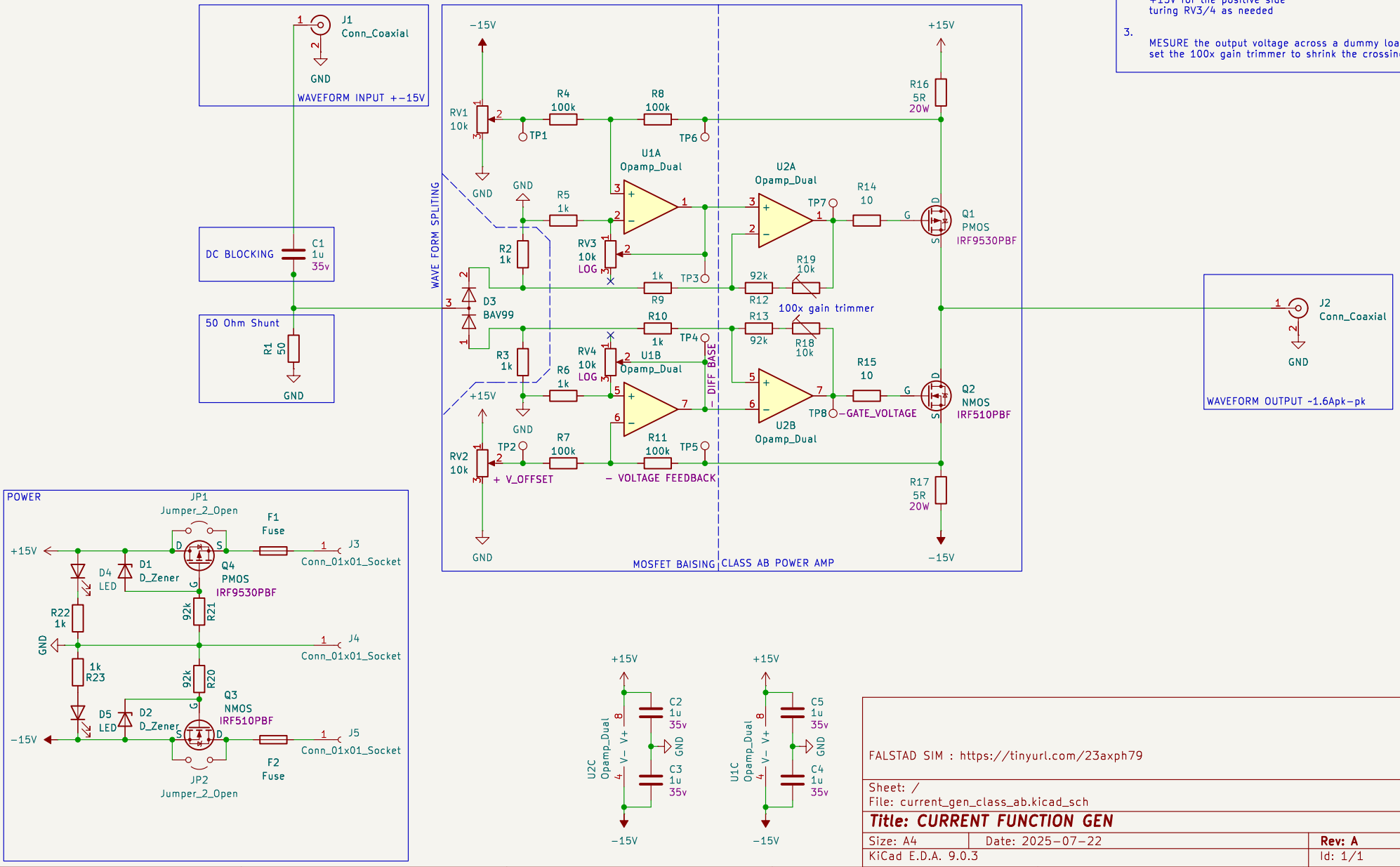

FALSTAD SIM : https://tinyurl.com/23axph79

Sheet: /
File: current_gen_class_ab.kicad_sch

Title: CURRENT FUNCTION GEN

Size: A4	Date: 2025−07−22	Rev: A
KiCad E.D.A. 9.0.3		Id: 1/1