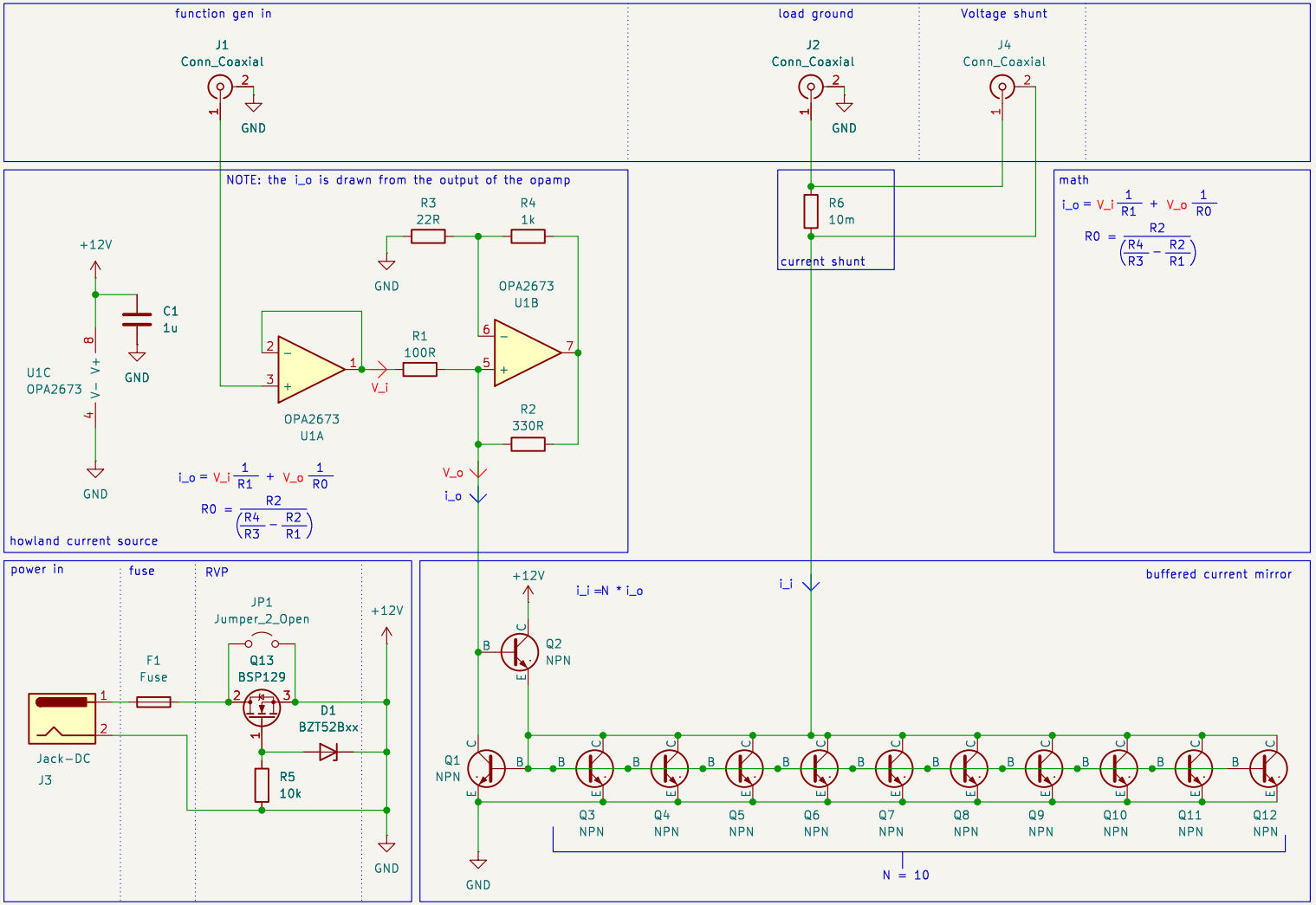

falstad : https://tinyurl.com/ymyxdbs5

Sheet: /
File: current_gen.kicad_sch

Title: constant current function gen

Size: A4	Date: 2025-07-07	Rev: REV A
KiCad E.D.A. 9.0.3		Id: 1/1