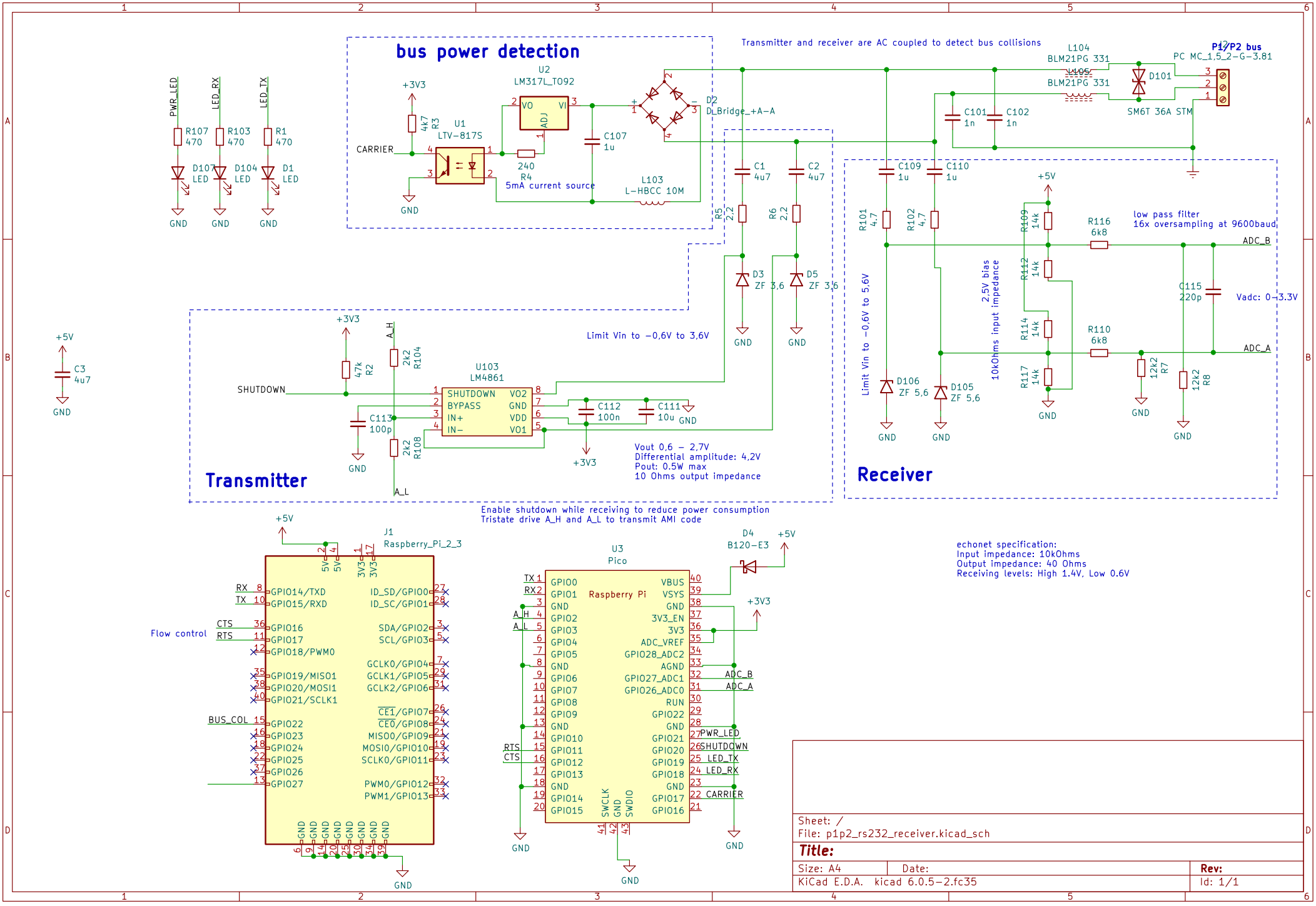

Sheet: /
File: p1p2_rs232_receiver.kicad_sch

Title:

Size: A4	Date:	Rev:
KiCad E.D.A. kicad 6.0.5-2.fc35		Id: 1/1