VERF connet failed and we are trying to figure out why

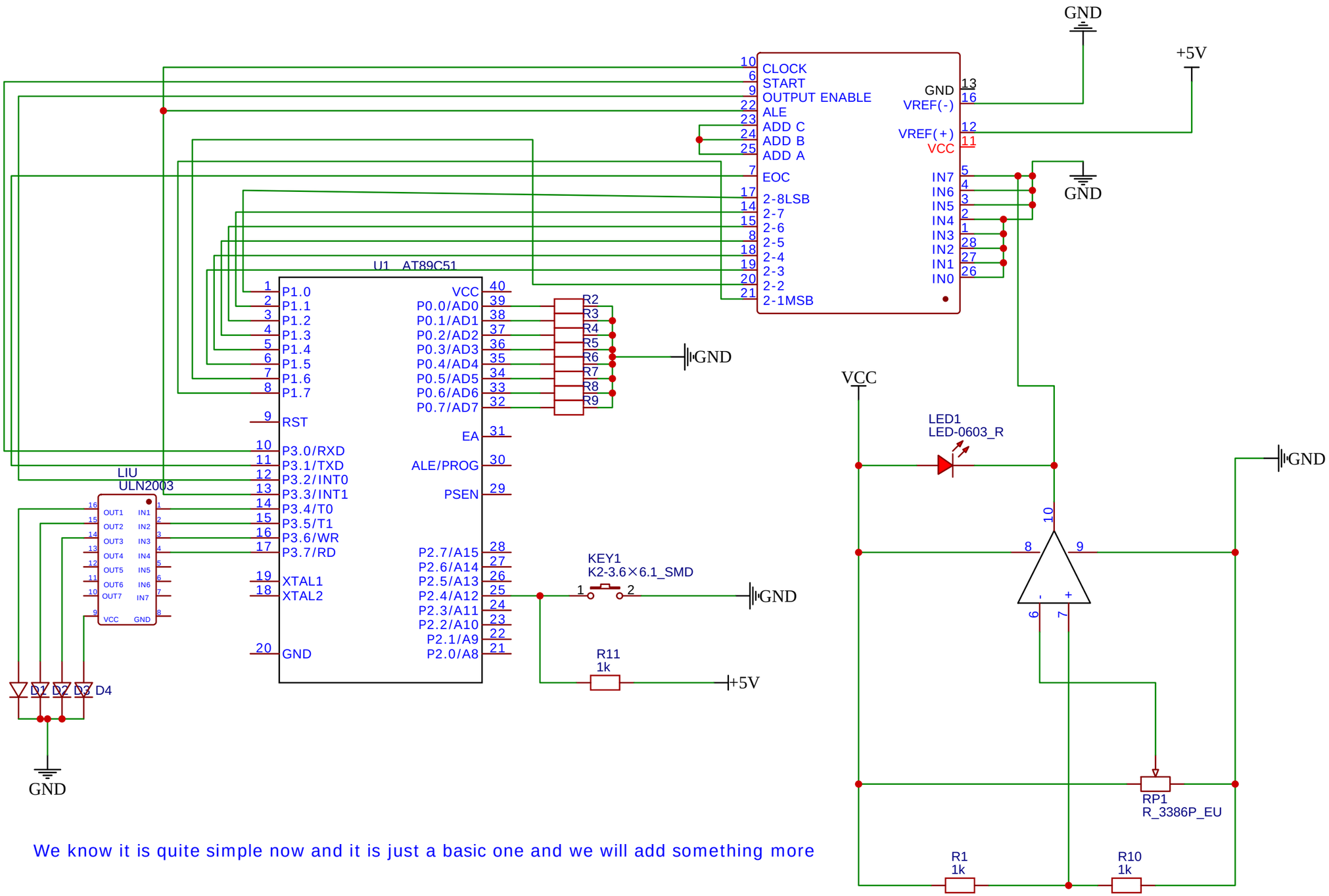

We know it is quite simple now and it is just a basic one and we will add something more

TITLE: Sheet_1	REV: 1.0
嘉立创EDA Company: Your Company	Sheet: 1/1
Date: 2024-10-30 Drawn By: p21000527	