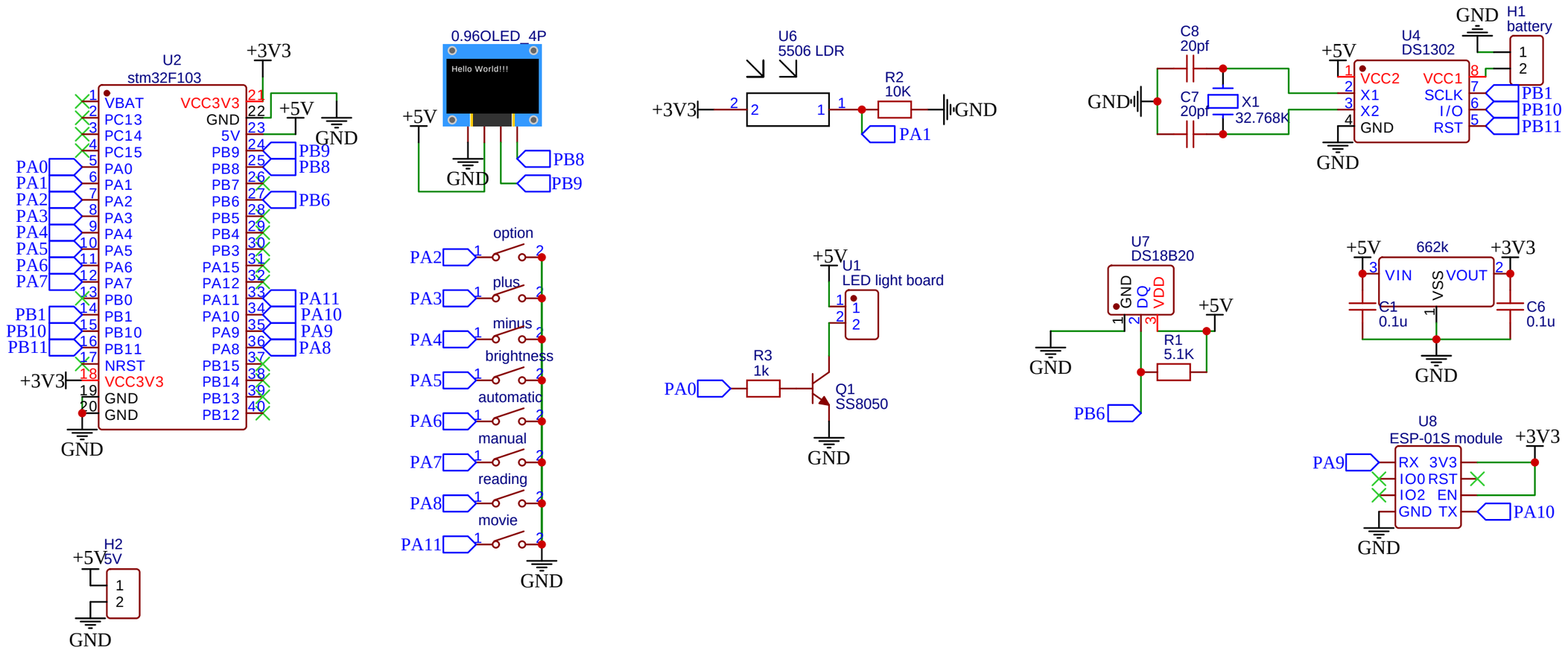

TITLE: STM32-based Smart Lighting Control System		REV: 1.0
	Company: Group 17	Sheet: 1/1
	Date:	Drawn By:

嘉立创EDA