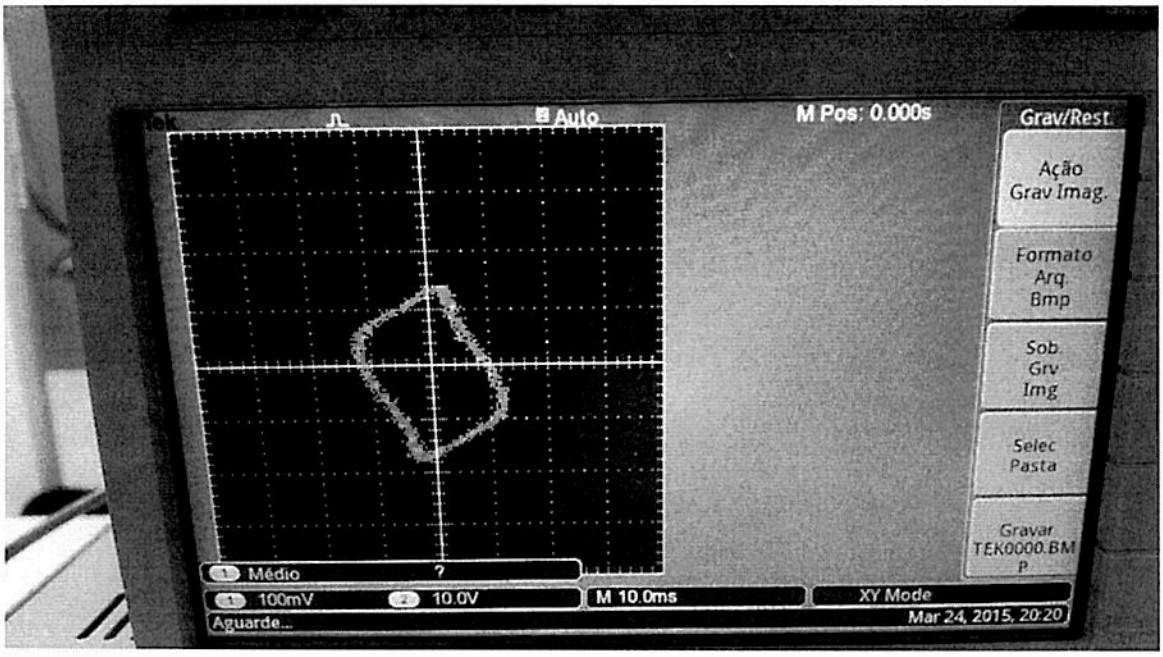
Auto
M Pos: 0.000s
Grav/Rest.
Ação Grav Imag.
Formato Arq. Bmp
Sob. Grv Img
Selec Pasta
Gravar TEK0000.BMP
Médio
100mV
10.0V
M 10.0ms
XY Mode
Aguarde...
Mar 24, 2015, 20:20

$\Rightarrow$ Área de histerese:

$= A_A + A_B + A_C + A_D + A_E$

$= 0{,}52 + 0{,}46 + 0{,}6 + 0{,}72 + 1{,}215 + 0{,}675$

$= 4{,}2$

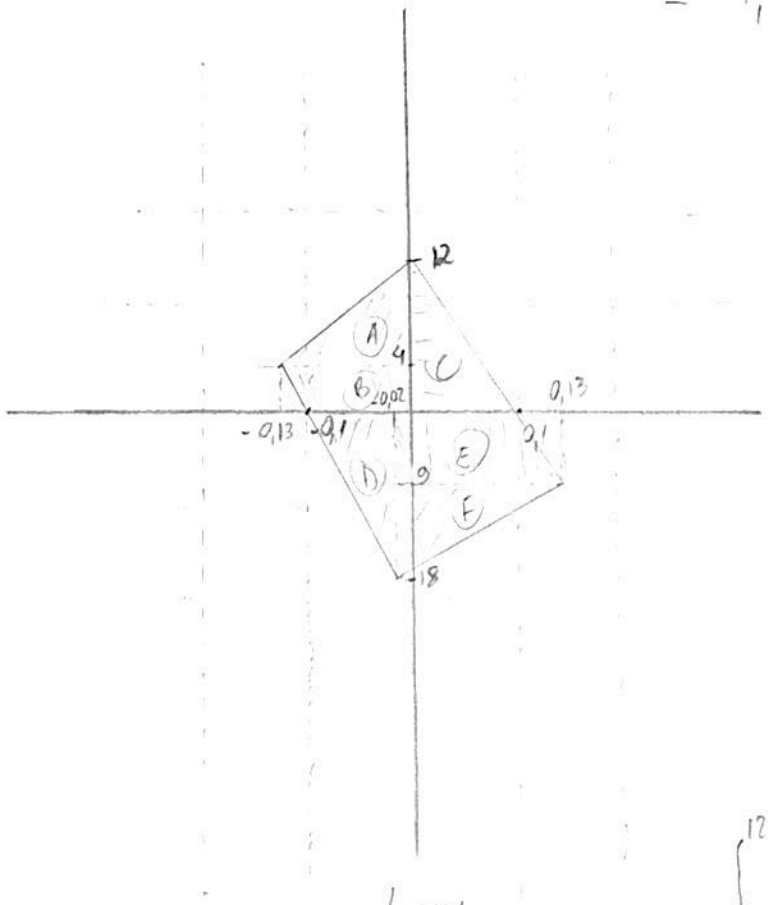

$$A_E = \frac{(b_{E1} + b_{E2}) \cdot h_E}{2} = \frac{(0{,}12 + 0{,}15)}{2}$$

$$A_E = 1{,}215$$

$$A_F = \frac{b_F \cdot h_F}{2} = \frac{0{,}15 \cdot 9}{2} = 0{,}675$$

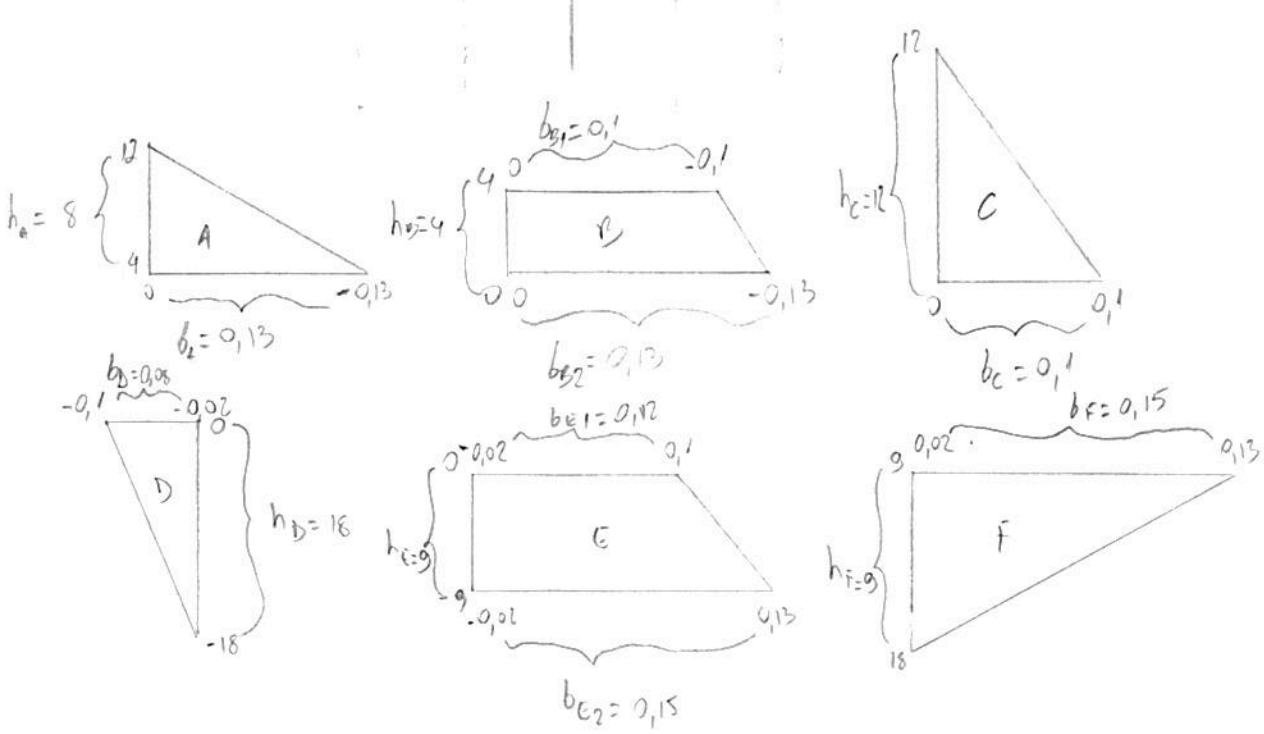

$$A_A = \frac{b_A \, h_A}{2} = \frac{8 \cdot 0{,}13}{2} = 0{,}52$$

$$A_C = \frac{b_C \cdot h_C}{2} = \frac{0{,}1 \cdot 12}{2} = 0{,}6$$

$$A_B = \frac{(b_{B1} + b_{B2}) \cdot h_B}{2} = \frac{(0{,}1 + 0{,}13)}{2} \cdot 4 = 0{,}46$$

$$A_D = \frac{b_D \cdot h_D}{2} = \frac{0{,}08 \cdot 18}{2} = 0{,}72$$