Assessment 3

2026

COURSE: ENGINEERING

TIME: 60 HOURS

SUBJECT: Strength of Materials 4A

MARKS: 100

Examiner: Prof R.F. Laubscher

Moderator: Prof D.M. Madyira

Finite Element Stress Analysis of a Mechanical Plate

Faculty of Engineering and the Built Environment

Student Name:	Sithabiso Msane
Student Number:	223180282
Software:	SOLIDWORKS Simulation
Department:	Department of Mechanical Engineering Science
Date:	April 14, 2026

Abstract

This report presents a static linear-elastic finite element analysis of a 12 mm-thick mechanical plate modelled in SOLIDWORKS Simulation. A mesh refinement study was performed to verify convergence of the maximum von Mises stress, the largest expected compressive stress (interpreted from the minimum third principal stress), and the maximum horizontal displacement. A final controlled mesh was selected to match the fine-mesh solution while reducing the computational size of the model. The final results satisfy equilibrium and provide the values required for the assignment submission.

Keywords: finite element method; mesh convergence; von Mises stress; principal stress; displacement; SOLIDWORKS Simulation.

Declaration

I, Sithabiso Msane (223180282), declare that:

This report is my own original work.

All sources used have been properly acknowledged by means of complete references.

This work has not been submitted for assessment at any other institution.

I understand that plagiarism is wrong and that the University may take disciplinary action if misconduct is found.

Name: Sithabiso Msane

Signature:

Date: April 14, 2026

Contents

Abstract **i**

Declaration **ii**

List of Figures **iv**

List of Tables **v**

List of Acronyms **vi**

1 Introduction **1**

1.1 Background 1

1.2 Aim 1

1.3 Objectives 1

1.4 Report Overview 2

2 Finite Element Model **3**

2.1 Geometry 3

2.2 Boundary conditions 4

2.3 Loads 4

2.4 Analysis 4

2.5 Material properties 4

2.6 Acceptance criteria 4

2.7 Discretization 5

3 Results **6**

3.1 Finite element results 6

3.2 Summary / table of results 9

4 Conclusion **10**

A Plate drawing and key dimensions **12**

List of Figures

1 Final geometric model used in the analysis. 3

2 Model with fixed support and applied face load. 3

3 Final converged mesh used for reporting, with global element size of 8 mm and local mesh control of 2 mm. 5

4 von Mises stress contour for the final converged model. 6

5 Horizontal displacement (U_X) contour for the final converged model. 7

6 Third principal stress (P_3) contour for the final converged model. 7

7 Resultant displacement contour for the final converged model. 8

8 Convergence of maximum von Mises stress with progressive mesh refinement. . . 8

9 Convergence of the magnitude of the minimum third principal stress, interpreted here as the largest expected compressive stress. 8

10 Assignment drawing of the mechanical plate (dimensions in mm). 13

List of Tables

1 Material properties used in the finite element model. 4
2 Final reported values for the selected mesh (8 mm global + 2 mm local control). . 9
3 Mesh refinement results and calculated degrees of freedom. 9

List of Acronyms

FEM	Finite Element Method
DOF	Degrees of Freedom
CAD	Computer-Aided Design

1 Introduction

1.1 Background

The finite element method (FEM) is a standard engineering tool for estimating stresses, strains, and deformations in components with irregular geometry and complex load paths. Instead of relying only on closed-form formulae, the continuum is discretized into a set of elements connected at nodes, and the governing equilibrium problem is solved numerically in the form

$$[K]\{u\} = \{F\}, \tag{1}$$

where $[K]$ is the global stiffness matrix, $\{u\}$ is the nodal displacement vector, and $\{F\}$ is the applied load vector [1–3].

For plate-like parts containing holes, relief cut-outs, and abrupt changes in section, the local stress field is not uniform. Instead, stress concentrations develop near the geometric discontinuities, and these peaks must be captured with sufficient mesh density to avoid misleading numerical results [4, 5]. A mesh convergence study is therefore essential: the mesh is progressively refined until the key response quantities become essentially unchanged. This is the point at which the numerical model is considered stable and reliable [6].

In the present assignment, the part is a 12 mm-thick plate with one large circular opening and two semicircular relief features. The left face is fixed and a 3,000 N normal load is applied to the right-hand face. The objective is to determine the mass of the part, the maximum von Mises stress, the largest expected compressive stress, the maximum horizontal displacement, and the numerical size of the finite element model.

1.2 Aim

The aim of this report is to perform a static linear-elastic finite element stress analysis of the mechanical plate and to select a numerically efficient mesh that produces converged results for the required output quantities.

1.3 Objectives

The objectives of this report are summarised below and describe the workflow followed from model setup through to mesh verification and final reporting.

1. model the supplied plate geometry in SOLIDWORKS Simulation;
2. assign the material properties specified in the assignment;
3. apply the prescribed fixed support and distributed load;
4. perform a static finite element analysis for a sequence of progressively refined meshes;
5. compute the degrees of freedom (DOF) for each model;
6. compare stress and displacement convergence trends; and
7. select and justify the final mesh used for reporting the assignment results.

1.4 Report Overview

Section 2 defines the finite element model, including the geometry, boundary conditions, loading, material data, acceptance criteria, and discretization strategy. Section 3 presents the finite element results, convergence plots, contour plots, and the final summary table. The report concludes with the main findings, followed by the references and appendices.

2 Finite Element Model

2.1 Geometry

The final CAD model used for the analysis is shown in Fig. 1. The plate thickness is 12 mm, and the model image indicates that the student-number-based circular feature diameter used in the final part is 82 mm. The geometry also contains an upper semicircular cut-out and a lower semicircular relief, which are expected to act as local stress raisers.

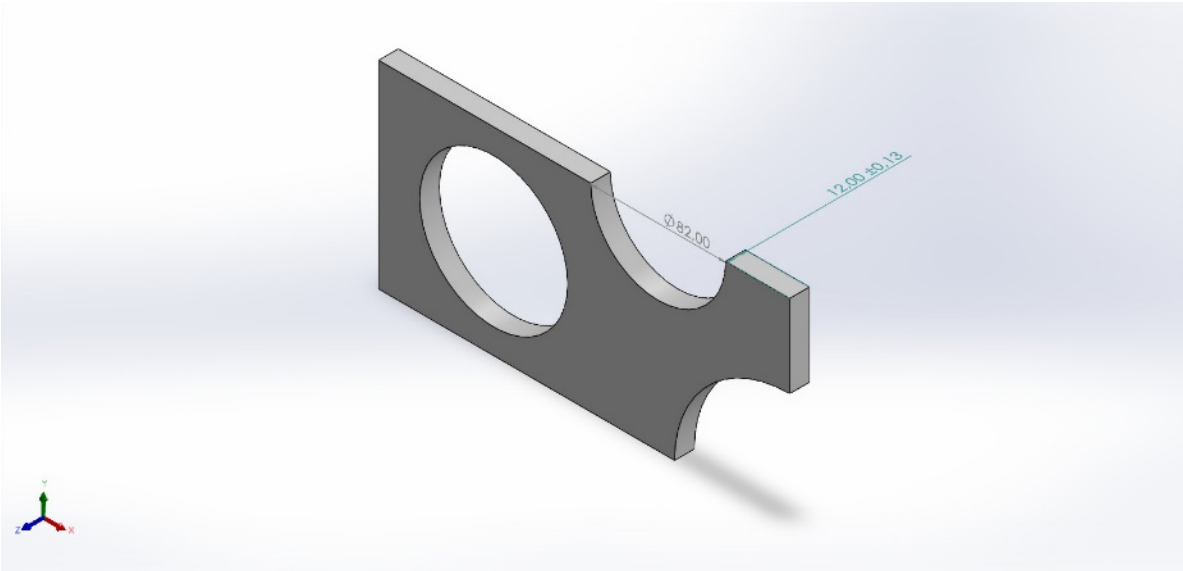

Figure 1: Final geometric model used in the analysis.

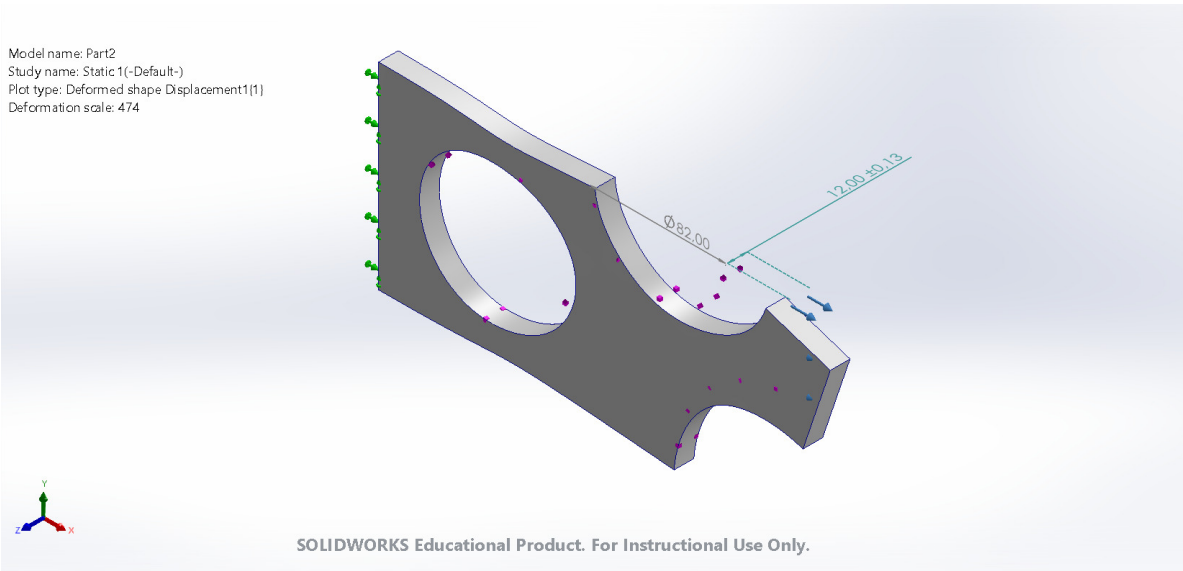

Figure 2: Model with fixed support and applied face load.

2.2 Boundary conditions

The left-hand face of the plate was fully constrained using a fixed geometry support. This suppresses translation in all three global directions on that face and creates a cantilever-type response. The support representation is shown in Fig. 2.

2.3 Loads

A normal force of 3,000 N was applied to the loaded face on the right-hand side of the part. The load was distributed over the face rather than applied at a point, which is consistent with the assignment brief and avoids an artificial point-load singularity.

2.4 Analysis

A static linear-elastic analysis was performed using 3D solid elements in SOLIDWORKS Simulation. Small-displacement behaviour was assumed, and the response was taken as purely mechanical. The required output quantities were the maximum von Mises stress, the largest expected compressive stress taken as the magnitude of the minimum third principal stress, and the maximum horizontal displacement taken from the maximum positive U_X value. The resultant displacement was also reviewed as a secondary convergence check.

2.5 Material properties

The assignment specified a linear elastic isotropic material with modulus of elasticity $E = 190\,\mathrm{GPa}$, Poisson's ratio $\nu = 0.29$, and density $\rho = 7{,}800\,\mathrm{kg\,m^{-3}}$. These properties were used to evaluate stiffness and mass. The SolidWorks material card used in the final report also contained a yield strength of 250 MPa, which was used only as a practical acceptance check for the final von Mises stress result.

Table 1: Material properties used in the finite element model.

Property	Value
Elastic modulus, E	190 GPa
Poisson's ratio, ν	0.29
Density, ρ	$7{,}800\,\mathrm{kg\,m^{-3}}$
Yield strength, σ_y (material card)	250 MPa

2.6 Acceptance criteria

The final model was accepted only if it satisfied three engineering checks. Force equilibrium was verified by ensuring that the resultant reaction force closely matched the applied load of 3,000 N. Mesh convergence was verified by requiring negligible change in the key outputs relative to the finest uniform mesh; in this report a change below 1 % in both maximum von Mises stress and maximum horizontal displacement was used as a practical threshold. Finally, the elastic stress limit was verified by ensuring that the final maximum von Mises stress remained below the assigned yield strength of 250 MPa.

The factor of safety against first yield for the final selected mesh is estimated by

$$n_y = \frac{\sigma_y}{\sigma_{\mathrm{vm,max}}} = \frac{250}{49.06} \approx 5.10. \tag{2}$$

2.7 Discretization

A blended curvature-based solid mesh was used. Uniform global mesh sizes of 14 mm, 10 mm, 8 mm, 5 mm, 3 mm, 2 mm and 1 mm were tested first. After the convergence trends were established, a final mesh was created using a global size of 8 mm together with a local mesh control of 2 mm on three faces around the stress concentration regions. This strategy was adopted to keep the model computationally efficient while preserving solution accuracy in the critical areas.

For a 3D solid model with translational degrees of freedom only, the total number of degrees of freedom is approximated by

$$\mathrm{DOF} = 3\,N_{\mathrm{nodes}}. \tag{3}$$

The final selected mesh is shown in Fig. 3.

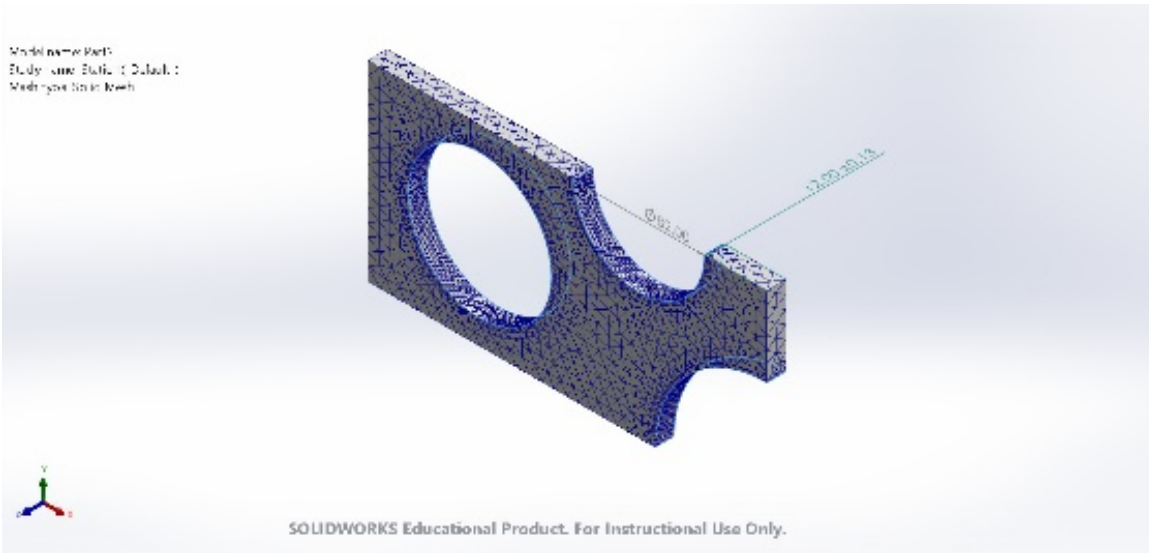

Figure 3: Final converged mesh used for reporting, with global element size of 8 mm and local mesh control of 2 mm.

3 Results

3.1 Finite element results

The mesh refinement study showed clear convergence of the key response quantities. As the uniform mesh was refined from 14 mm to 1 mm, the maximum von Mises stress increased from 47.40 MPa to 49.05 MPa, while the maximum horizontal displacement changed only from 0.051,89 mm to 0.052,17 mm. The response therefore stabilised strongly once the mesh size reached about 3 mm.

The final controlled mesh produced a maximum von Mises stress of 49.06 MPa, a largest compressive stress of 31.63 MPa, and a maximum horizontal displacement of 0.052,16 mm. These values are effectively identical to the 1 mm uniform-mesh solution, while the final selected model required only 43,116 nodes and 129,348 DOF instead of 1,947,481 nodes and 5,842,443 DOF. This is a major reduction in computational cost with negligible loss of accuracy.

The final model also satisfied the equilibrium check: the reaction force reported by the solver was 2,999.94 N, which differs from the applied load by only about 0.002 %. The selected model is therefore both converged and mechanically consistent.

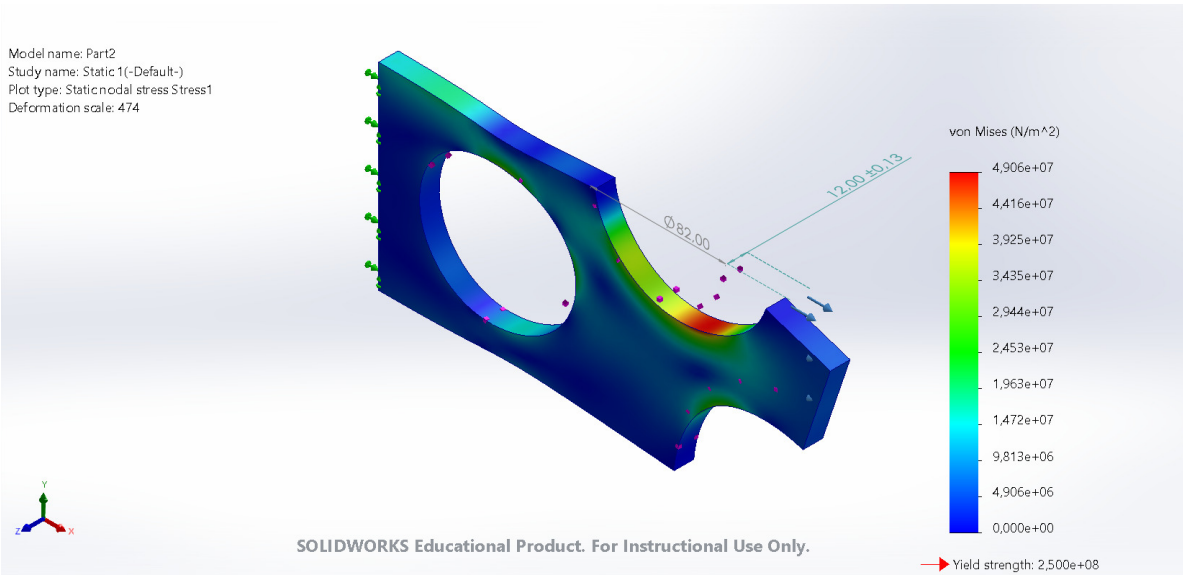

Figure 4: von Mises stress contour for the final converged model.

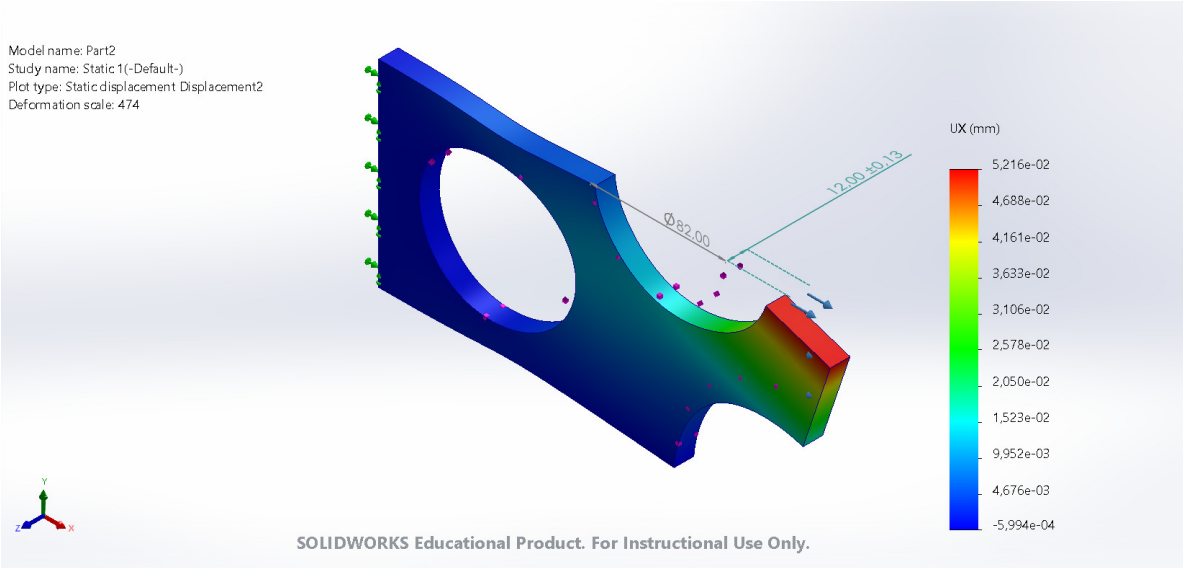

Figure 5: Horizontal displacement (U_X) contour for the final converged model.

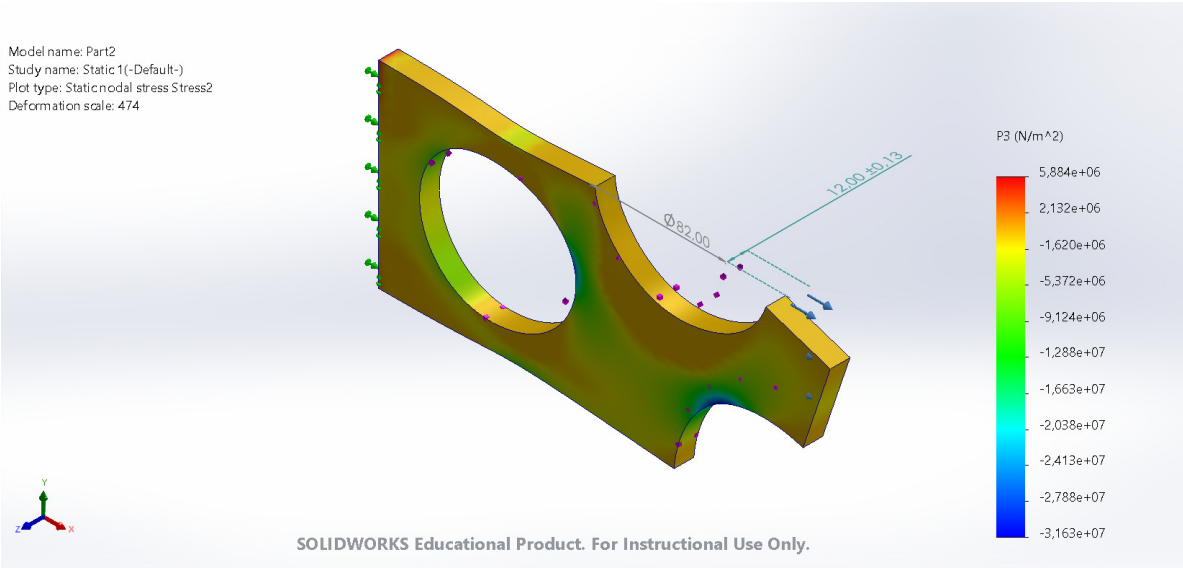

Figure 6: Third principal stress (P_3) contour for the final converged model.

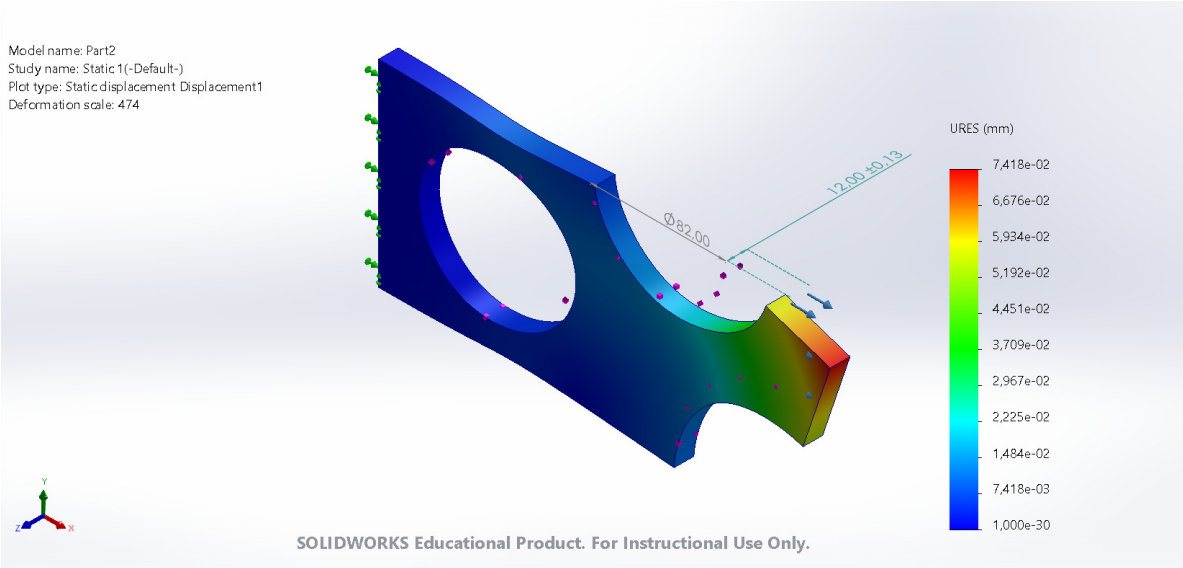

Figure 7: Resultant displacement contour for the final converged model.

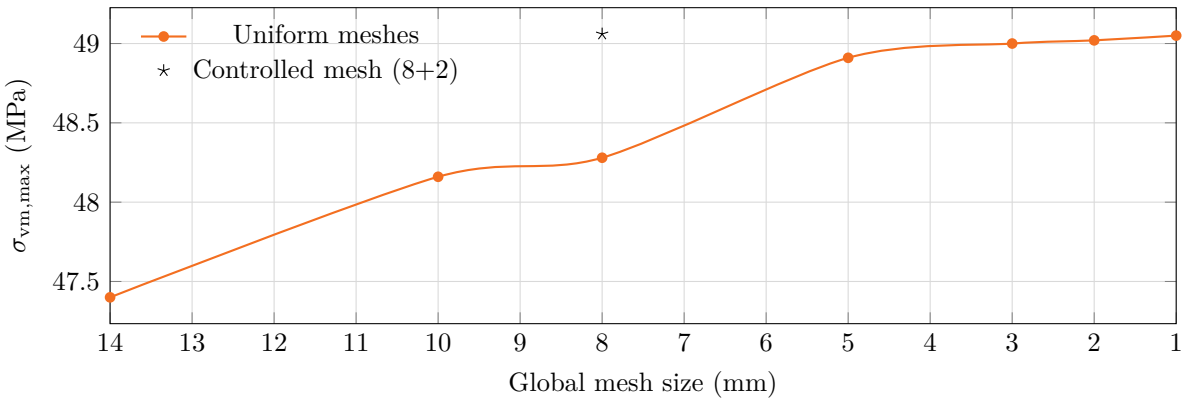

Figure 8: Convergence of maximum von Mises stress with progressive mesh refinement.

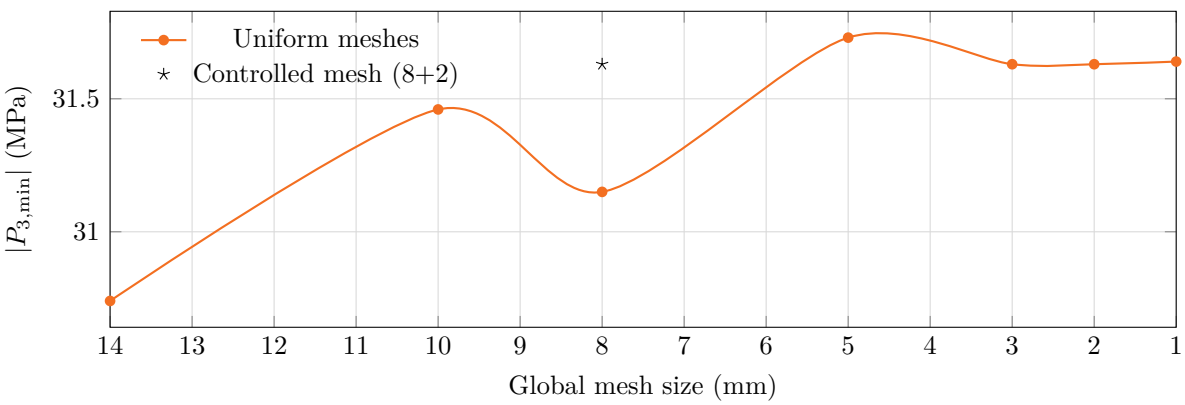

Figure 9: Convergence of the magnitude of the minimum third principal stress, interpreted here as the largest expected compressive stress.

3.2 Summary / table of results

Table 2 gives the final reported values for the selected converged mesh. These are the values recommended for direct inclusion in the assignment table.

Table 2: Final reported values for the selected mesh (8 mm global + 2 mm local control).

Quantity	Value
Student number	223180282
Mass of part	1.605 kg
Maximum stress (von Mises)	49.06 MPa
Largest expected compressive stress	31.63 MPa
Maximum horizontal displacement (U_X)	0.052,16 mm
Number of nodes	43,116
Number of elements	21,530
Degrees of freedom	129,348

For completeness, Table 3 summarizes the entire convergence study. The mass remained constant because the geometry and material density were unchanged, while the stress and displacement outputs approached asymptotic values as the mesh became finer.

Table 3: Mesh refinement results and calculated degrees of freedom.

Mesh case	Nodes	Elements	DOF	$\sigma_{\mathrm{vm,max}}$ (MPa)	$\lvert P_{3,\mathrm{min}}\rvert$ (MPa)	U_X (mm)	U_{res} (mm)
14 mm uniform	1653	761	4959	47.40	30.74	0.05189	0.07380
10 mm uniform	4265	2236	12795	48.16	31.46	0.05209	0.07408
8 mm uniform	6640	3602	19920	48.28	31.15	0.05213	0.07414
5 mm uniform	23443	14260	70329	48.91	31.73	0.05216	0.07418
3 mm uniform	86136	56077	258408	49.00	31.63	0.05217	0.07419
2 mm uniform	276481	187931	829443	49.02	31.63	0.05217	0.07419
1 mm uniform	1947481	1384266	5842443	49.05	31.64	0.05217	0.07419
8 mm global + 2 mm control	43116	21530	129348	49.06	31.63	0.05216	0.07418

4 Conclusion

A static finite element stress analysis was completed for the mechanical plate using SOLIDWORKS Simulation. The mesh refinement study showed clear convergence of the main output quantities. The maximum von Mises stress converged to approximately 49 MPa, the largest compressive stress converged to approximately 31.6 MPa, and the maximum horizontal displacement converged to approximately 0.052,2 mm.

The final selected mesh — a global element size of 8 mm with a local 2 mm mesh control in the stress concentration regions — is the best engineering choice for this assignment. It reproduces the fine-mesh results almost exactly, while using only a small fraction of the nodes, elements, and degrees of freedom required by the 1 mm uniform mesh. The final reported results are therefore numerically justified, mechanically consistent, and computationally efficient.

References

[1] D. L. Logan, *A First Course in the Finite Element Method*, 6th ed. Cengage Learning, 2016.

[2] R. D. Cook, D. S. Malkus, M. E. Plesha, and R. J. Witt, *Concepts and Applications of Finite Element Analysis*, 4th ed. John Wiley & Sons, 2001.

[3] O. C. Zienkiewicz, R. L. Taylor, and J. Z. Zhu, *The Finite Element Method: Its Basis and Fundamentals*, 7th ed. Butterworth-Heinemann, 2013.

[4] W. D. Pilkey and D. F. Pilkey, *Peterson's Stress Concentration Factors*, 3rd ed. John Wiley & Sons, 2008.

[5] A. Khechai, A. Tati, and A. Guettala, "Finite element analysis of stress concentrations and failure criteria in composite plates with circular holes," *Frontiers of Mechanical Engineering*, vol. 9, no. 3, pp. 281–294, 2014.

[6] E. Bárnkopf, B. Kővesdi, and L. Dunai, "Investigation of stress concentration zones in fem-based design of welded plated structures," *Buildings*, vol. 13, no. 4, p. 1057, 2023.

A Plate drawing and key dimensions

Figure 10 reproduces the assignment drawing used to define the geometry. The plate thickness is 12 mm and the overall plate height is 120 mm. The diameter of the large circular feature is defined by the assignment rule as the last two digits of the student number (in millimetres), unless that value is below 20 in which case 20 mm is added; for student number 223180282, this gives a diameter of 82 mm. The drawing also indicates a 250 mm top length, an 80 mm upper relief width, and a lower relief radius of 70 mm. Where the drawing shows a nominal circular diameter (e.g. ∅90), this is treated as the template value that is replaced by the student-number-based diameter for the final model used in the analysis.

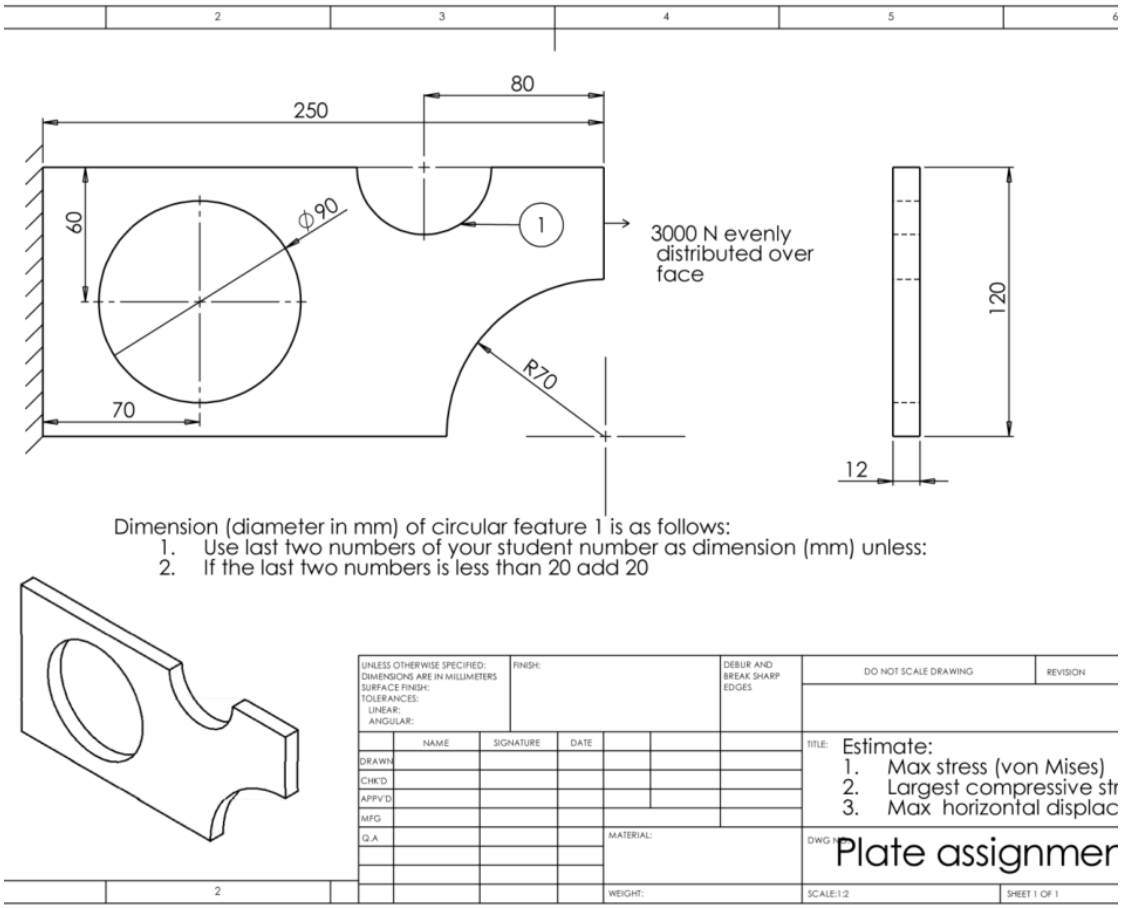

Figure 1 Mechanical part (Dimensions are in mm)

Figure 10: Assignment drawing of the mechanical plate (dimensions in mm).