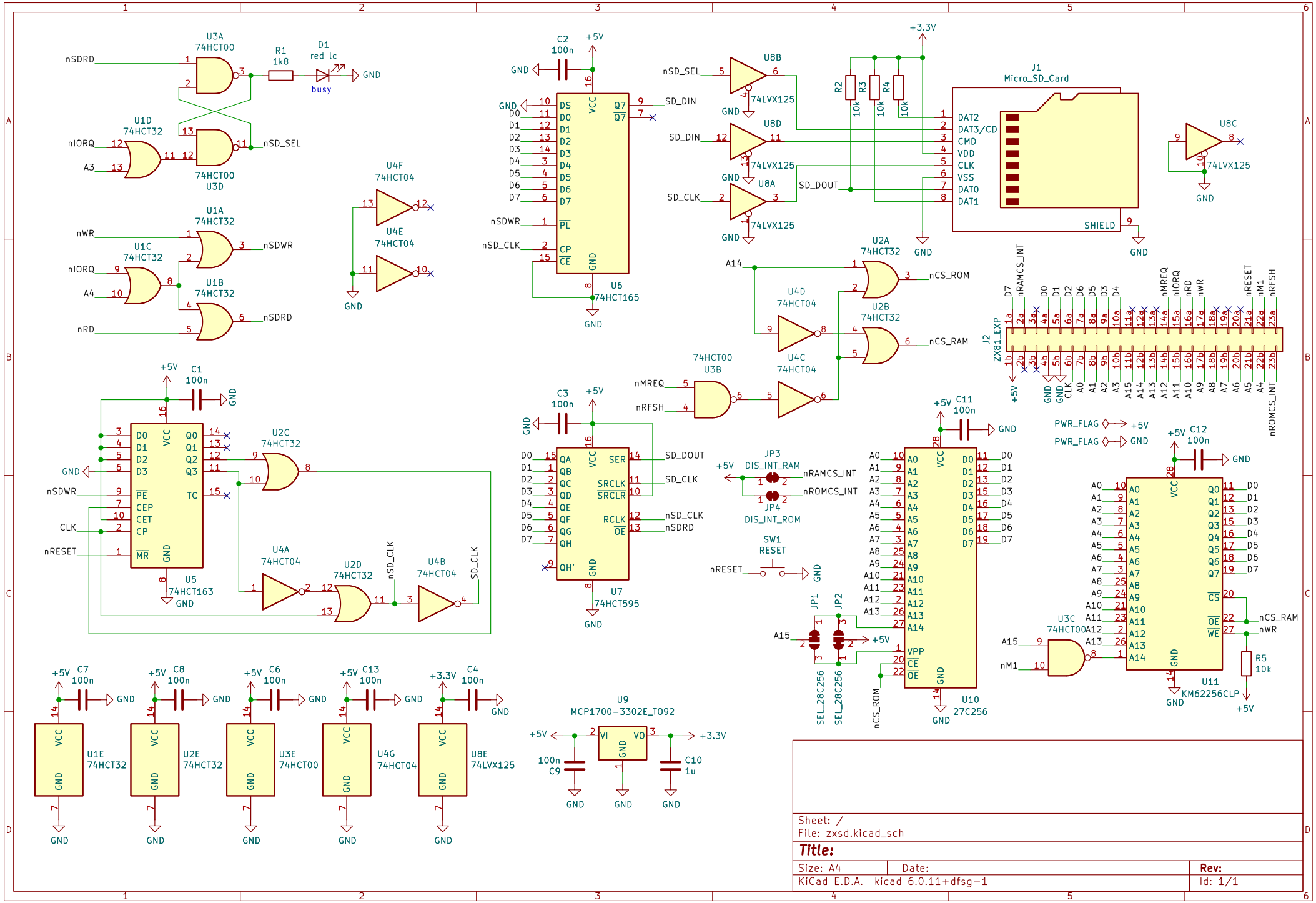
U3A
74HCT00
R1
1k8
D1
red lc
busy
GND
nSDRD
U1D
74HCT32
nIORQ
A3
nSD_SEL
74HCT00
U3D
U1A
74HCT32
nWR
nSDWR
U1C
74HCT32
nIORQ
A4
U1B
74HCT32
nRD
nSDRD
U4F
74HCT04
U4E
74HCT04
C2
100n
+5V
GND
DS
D0
D1
D2
D3
D4
D5
D6
D7
VCC
Q7
Q7
SD_DIN
nSDWR
PL
nSD_CLK
CP
CE
U6
74HCT165
U8B
nSD_SEL
74LVX125
U8D
SD_DIN
74LVX125
U8A
SD_CLK
74LVX125
SD_DOUT
+3.3V
R2
10k
R3
10k
R4
10k
J1
Micro_SD_Card
DAT2
DAT3/CD
CMD
VDD
CLK
VSS
DAT0
DAT1
SHIELD
U8C
74LVX125
U2A
74HCT32
A14
nCS_ROM
U4D
74HCT04
U2B
74HCT32
nCS_RAM
U4C
74HCT04
74HCT00
U3B
nMREQ
nRFSH
J2
ZX81_EXP
nRAMCS_INT
nROMCS_INT
PWR_FLAG
C1
100n
U2C
74HCT32
PE
CEP
CET
CP
MR
TC
U5
74HCT163
CLK
nRESET
U4A
74HCT04
U2D
74HCT32
nSD_CLK
U4B
74HCT04
SD_CLK
C3
100n
QA
QB
QC
QD
QE
QF
QG
QH
QH'
SER
SRCLK
SRCLR
RCLK
OE
U7
74HCT595
JP3
DIS_INT_RAM
JP4
DIS_INT_ROM
SW1
RESET
JP1
JP2
SEL_28C256
C11
100n
U10
27C256
VPP
C12
100n
U11
KM62256CLP
U3C
74HCT00
nM1
R5
10k
C7
100n
C8
100n
C6
100n
C13
100n
C4
100n
U1E
74HCT32
U2E
74HCT32
U3E
74HCT00
U4G
74HCT04
U8E
74LVX125
U9
MCP1700-3302E_TO92
VI
VO
100n
C9
C10
1u
Sheet: /
File: zxsd.kicad_sch
Title:
Size: A4
Date:
Rev:
KiCad E.D.A. kicad 6.0.11+dfsg-1
Id: 1/1