Applied Linear Algebra in Data Analysis

Tutorial & Assignments

Sivakumar Balasubramanian

Contents

1 Linear Systems and Matrix Operations - 02 **2**
1.1 Tutorial Problems 2
1.2 Assignment 3

2 Linear Systems and Matrix Operations - 03 **9**
2.1 Tutorial Problems 9
2.2 Assignment 11
2.3 Additional Problems 13

3 Linear Systems and Matrix Operations - 04 **15**
3.1 Tutorial Problems 15
3.1.1 Orthogonality 15
3.1.2 Matrix Inverses 15
3.2 Assignment 16
3.3 Additional Problems 19

4 Linear Systems and Matrix Operations - 04 **21**
4.1 Tutorial Problems 21
4.1.1 Linear Least Squares 21

1. Linear Systems and Matrix Operations - 02

1.1 Tutorial Problems

1. Which of the following sets forms a vector space?

   (a) $\left\{ \begin{bmatrix} x_1 \\ x_2 \end{bmatrix} \middle| \; x_1, x_2 \in \mathbb{R} \text{ and } a_1x_1 + a_2x_2 = 0 \right\}$, where $a_1, a_2 \in \mathbb{R}$ are constants.

   (b) $\left\{ \begin{bmatrix} x_1 \\ x_2 \end{bmatrix} \middle| \; x_1, x_2 \in \mathbb{R} \text{ and } x_1^2 + x_2^2 \leq 1 \right\}$.

   (c) $\left\{ \begin{bmatrix} x_1 \\ x_1^2 \end{bmatrix} \middle| \; x_1, x_2 \in \mathbb{R} \right\}$.

2. Which of the following is a subspace of $\mathbb{R}^3$?

   (a) $\left\{ \begin{bmatrix} x_1 \\ x_2 \\ x_3 \end{bmatrix} \middle| \; x_1, x_2, x_3 \in \mathbb{R} \text{ and } x_1 + x_2 + x_3 = 0 \right\}$

   (b) $\left\{ \begin{bmatrix} x_1 \\ x_2 \\ x_3 \end{bmatrix} \middle| \; x_1, x_2, x_3 \in \mathbb{R} \text{ and } x_1 + x_2 + 1 = 0 \right\}$

   (c) $\left\{ \begin{bmatrix} x_1 \\ x_2 \\ x_3 \end{bmatrix} \middle| \; x_1, x_2, x_3 \in \mathbb{R} \text{ and } x_1^2 + x_2^2 + x_3^2 = 1 \right\}$

3. What geometrical object is represented by the following sets?

   (a) $\text{span}\left(\{\mathbf{a}_1\}\right)$, where $\mathbf{a}_1 = \begin{bmatrix} 1 \\ 1 \\ 0 \end{bmatrix}$.

   (b) $\text{span}\left(\{\mathbf{a}_1, \mathbf{a}_2\}\right)$, where $\mathbf{a}_1 = \begin{bmatrix} 1 \\ 0 \\ 0 \end{bmatrix}$ and $\mathbf{a}_3 = \begin{bmatrix} 0 \\ 0 \\ 1 \end{bmatrix}$.

   (c) $\text{span}\left(\{\mathbf{a}_1, \mathbf{a}_2, \mathbf{a}_3\}\right)$, where $\mathbf{a}_1 = \begin{bmatrix} 1 \\ 0 \\ 0 \end{bmatrix}$, $\mathbf{a}_2 = \begin{bmatrix} 0 \\ 1 \\ 0 \end{bmatrix}$ and $\mathbf{a}_3 = \begin{bmatrix} 0 \\ 0 \\ 1 \end{bmatrix}$.

4. A medical supply distributor must ship oxygen cylinders from two central plants (S_1 and S_2) to four hospitals (H_1, H_2, H_3, H_4) in a city. Plant S_1 can supply 40 cylinders; S_2 can provide 30 cylinders. The hospitals require the following numbers: (a) H_1: 25 cylinders; (b) H_2: 20 cylinders; (c) H_3: 15 cylinders; (d) H_4: 20 cylinders. Write down the set of linear equations corresponding to this problem.

5. A hospital has 10 wards: A_1 to A_{10}. The hospital employs 55 attendants who are be allocated to these wards on a daily basis. You are given the task of allocating the attendants to the wards based on the following requirements:

   (a) No attendant must be left unassigned.

   (b) No attendant can be assigned to more than one ward.

(c) Even numbered wards have a high patient load than the odd numbered wards. Thus, the even numbers wards together will require 10 more attendants than the odd numbered wards.

(d) Ward A_1 requires 2 more attendants than Ward A_3.

(e) Ward A_2 requires twice as many attendants as Ward A_4.

Formulate the set of linear equations.

6. Consider the following linear, DC circuit shown in Figure 1.1. Using Kirchoff's voltage law write down the relationship between the voltage supplies and the currents i_1 and i_2 through the two loops containing the voltage sources V_1 and V_2, respectively.

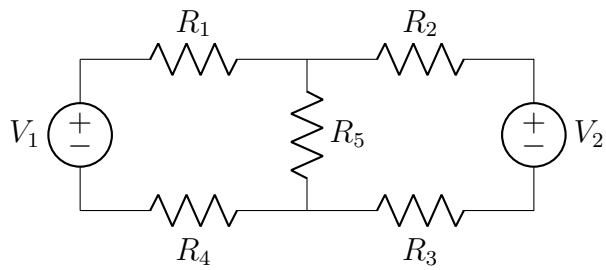

Figure 1.1: Simple linear DC circuit.

7. **Affine combinations.** Consider the following vectors in $\mathbb{R}^2$.

$$\mathbf{a}_1 = \begin{bmatrix} 1 \\ 1 \end{bmatrix} \quad \mathbf{a}_2 = \begin{bmatrix} -1 \\ 1 \end{bmatrix}$$

Draw the locus of all points generated by the affine combination $c_1\mathbf{a}_1 + c_2\mathbf{a}_2$, $c_1 + c_2 = 1$, $c_1, c_2 \in \mathbb{R}$.

1.2 Assignment

1. A hospital has four special wards - A, B, C, and D, which require beds, patient monitors, ventilators, and nursing staff to operate effectively. The allocation is planned on a monthly basis, depending on the expected number of patients in these wards on that month. For the upcoming month, the hospital has the following resources and requirements:

(a) There are a total of 100 beds, 60 patient monitors, 30 ventilators, and 40 nurse staff available for allocation.

(b) Wards A and B together will required 10 more beds than wards C and D together.

(c) Ward A has twice the number of beds as C.

(d) All wards require an equal number of patient monitors.

(e) Wards B and D will not require any ventilators.

(f) Ward A and C together requires thrice the number of nurse staff as wards B and D together.

You are given the job of allocating the resources to the four wards. Formulate this problem as a set of linear equations.

2. A meal planner must determine the servings of four food items — chicken, rice, daal, and milk — so the total diet exactly meets the following nutritional targets each day:

   - Exactly 1,400 calories
   - Exactly 90 grams of protein
   - Exactly 40 grams of fat
   - Exactly 150 grams of carbohydrates
   - Exactly 150 mg of vitamin C

   The nutritional content per serving for each of the four food items available to the meanl planner is as follows:

Food	**Calories**	**Protein (g)**	**Fat (g)**	**Carbs (g)**	**Vit C (mg)**
Chicken	220	43	5	0	0
Rice	200	4	0.5	45	0
Daal	50	4	0.5	10	75
Milk	100	9	2	11	2

   Formulate the system.

3. Which of the following sets forms a vector space?

   (a) $\{\mathbf{x} \mid x_1, x_2 \in \mathbb{R} \text{ and } a_1x_1 + a_2x_2 = 0\}$, where $a_1, a_2 \in \mathbb{R}$ are constants.

   (b) $\{\mathbf{x} \mid \mathbf{x} \in \mathbb{R}^n \text{ and } \sum_{i=1}^{n} a_i x_i = b\}$, where $\mathbf{a} \in \mathbb{R}^n$ and $b \in \mathbb{R}$ are constants.

   (c) $\{\mathbf{x} \mid \mathbf{x} \in \mathbb{R}^n \text{ and } \sum_{i=1}^{n} x_i^2 = 1\}$.

   (d) $\{(x[0], x[1], x[2], \ldots x[N-1]) \mid x[i] \in \mathbb{R}, 0 \leq i < N\}$.
   (The set of all real-valued time-domain signals of length N. $x[i]$ is the value of the signal at time instant i.)

4. A clinician is interested in estimating a patient's core body temperature T_c using multiple body surface measurements. Temperature sensors are placed at different body locations, each providing a reading that has a known proportional relationship to the core temperature. The measurements are:

   - Oral temperature: $T_\mathrm{o} = 0.95T_\mathrm{c}$
   - Axillary (armpit) temperature: $T_\mathrm{a} = 0.90T_\mathrm{c}$
   - Tympanic (ear) temperature: $T_\mathrm{t} = 0.98T_\mathrm{c}$
   - Forehead temperature: $T_\mathrm{f} = 0.92T_\mathrm{c}$

   During a clinical assessment, the following readings (in °C) are recorded: $T_\mathrm{o} = 36.5$, $T_\mathrm{a} = 35.8$, $T_\mathrm{t} = 37.2$, $T_\mathrm{f} = 36.0$. Formulate this as a system of linear equations to estimate T_c. Is this system of equations solvable?

5. There is reason for you to believe that the proportionality constants relating the core temperature to body surface temperatures in the above problem are incorrect. So, you decide to do an experiment to estimate these proportionality constants by recruiting a sample of 100 healthy individuals on whom you make the following measurements:

   - Core body temperature using an invasive rectal thermometer (gold standard): $T_\mathrm{c}^{(i)}$
   - Oral temperature: $T_\mathrm{o}^{(i)}$

- Axillary temperature: $T_{\mathrm{a}}^{(i)}$
- Tympanic temperature: $T_{\mathrm{t}}^{(i)}$
- Forehead temperature: $T_{\mathrm{f}}^{(i)}$

where $i = 1, 2, \ldots, 100$ denotes the individual subjects in your study. Assuming the linear model holds for each measurement location:

$$\begin{aligned} T_{\mathrm{o}}^{(i)} &= k_{\mathrm{o}}\, T_{\mathrm{c}}^{(i)} \\ T_{\mathrm{a}}^{(i)} &= k_{\mathrm{a}}\, T_{\mathrm{c}}^{(i)} \\ T_{\mathrm{t}}^{(i)} &= k_{\mathrm{t}}\, T_{\mathrm{c}}^{(i)} \\ T_{\mathrm{f}}^{(i)} &= k_{\mathrm{f}}\, T_{\mathrm{c}}^{(i)} \end{aligned}$$

Formulate a system of linear equations to relating the known measurements from the 100 subjects to the four unknown proportionality constants k_{o}, k_{a}, k_{t}, and k_{f}.

6. Which of the following are subspace of $\mathbb{R}^n$?

   (a) $\left\{ \begin{bmatrix} x_1 & x_2 & \cdots & x_n \end{bmatrix}^\top \;\middle|\; \sum_{i=1}^n x_i = 0,\ x_i \in \mathbb{R} \right\}$.

   (b) $\left\{ \begin{bmatrix} x_1 & x_2 & \cdots & x_n \end{bmatrix}^\top \;\middle|\; x_4 = 1 \right\}$.

   (c) $\left\{ \begin{bmatrix} x_1 & x_2 & \cdots & x_n \end{bmatrix}^\top \;\middle|\; \sum_{i=1}^n w_i x_i = 5,\ w_i, x_i \in \mathbb{R} \right\}$.

   (d) $\left\{ \begin{bmatrix} x_1 & x_2 & \cdots & x_n \end{bmatrix}^\top \;\middle|\; \sum_{i=1}^n w_i x_i = 0,\ w_i, x_i \in \mathbb{R}, w_i > 0 \right\}$.

7. Consider the vector space of polynomials of order n or less.

$$\mathcal{P} = \left\{ \sum_{k=0}^{n} a_k \cdot x^k \;\middle|\; a_k \in \mathbb{R} \right\}, \text{ where, } x \in [0, 1]$$

   We define the vector (polynomial) scaling and addition operation as the following. Let $p_1 = \sum_{k=0}^n a_k x^k$ and $p_2 = \sum_{k=0}^n b_k x^k$,

$$\alpha p_1 = \alpha \left(\sum_{i=0}^{n} a_k x^k \right) = \sum_{i=0}^{n} \alpha \cdot a_k \cdot x^k$$

$$p_1 + p_2 = \sum_{k=0}^{n} a_k x^k + \sum_{k=0}^{n} b_i x^k = \sum_{k=0}^{n} (a_k + b_k)\, x^k$$

   Show that polynomials of order strictly lower than n form subspaces of $\mathcal{P}$.

8. **Different types of combinations.** Consider the following vectors in $\mathbb{R}^2$.

$$\mathbf{a}_1 = \begin{bmatrix} 1 \\ 2 \end{bmatrix} \quad \mathbf{a}_2 = \begin{bmatrix} 2 \\ \frac{1}{2} \end{bmatrix} \quad \mathbf{a}_3 = \begin{bmatrix} -1 \\ 0 \end{bmatrix}$$

   Draw the locus of all points generated by the following combinations of these vectors. Note that all $c_i \in \mathbb{R}$.

   (a) Linear combination: $c_1\mathbf{a}_1 + c_2\mathbf{a}_2 + c_3\mathbf{a}_3$

   (b) Linear combination: $c_2\mathbf{a}_2$

(c) Affine combination: $c_1\mathbf{a}_1 + c_2\mathbf{a}_2$, $c_1 + c_2 = 1$

(d) Affine combination: $c_2\mathbf{a}_2 + c_3\mathbf{a}_3$, $c_2 + c_3 = 1$

(e) Conic combination: $c_1\mathbf{a}_1 + c_2\mathbf{a}_2$, $c_i \geq 0$

(f) Conic combination: $c_1\mathbf{a}_1 + c_3\mathbf{a}_3$, $c_i \geq 0$

(g) Convex combination: $c_1\mathbf{a}_1 + c_2\mathbf{a}_2$, $c_i \geq 0$, $c_1 + c_2 = 1$

(h) Convex combination: $c_1\mathbf{a}_1 + c_3\mathbf{a}_3$, $c_i \geq 0$, $c_1 + c_3 = 1$

(i) Convex combination: $c_1\mathbf{a}_1 + c_2\mathbf{a}_2 + c_3\mathbf{a}_3$, $c_i \geq 0$, $c_1 + c_2 + c_3 = 1$

9. Derive force and displacement relationship for a series of $n+1$ springs (with spring constants k_i) connected in a line (Figure 1.2). There are n nodes, with f_i and x_i representing the force applied and resulting displacement at the ith node. Formulate the linear equations

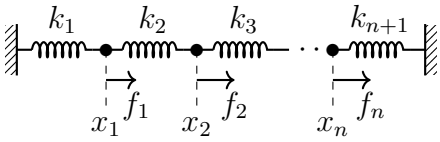

Figure 1.2: A series connection of linear springs experiencing different forces.

assuming: (a) the displacements are unknown and the forces are known, and (b) vice versa.

10. Consider the following electrical circuit with rectangular grid of resistors R. The input to this grid is a set of current injected at the top node as shown in the figure, such that $\sum_{k=1}^{5} i_k = 0$.

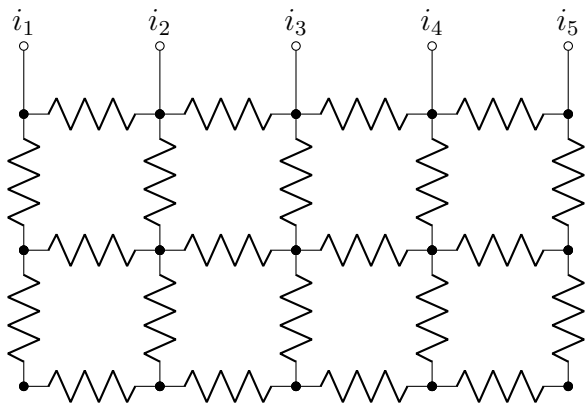

Figure 1.3: Caption

Express the relationship between the voltages at the different nodes (represented by $\bullet$ in the figure) and the net current flowing in/out of the node. The currents $i_1, \cdots i_5$ are known, and the voltages at the different nodes are the unknown.

11. Consider the following electrical circuit with rectangular grid of resistors R. The input to this grid is a set of current injected at the top node as shown in the figure, such that $\sum_{k=1}^{5} i_k = 0$.
Express the relationship between the voltages at the different nodes (represented by $\bullet$ in the figure) and the net current flowing in/out of the node. The currents $i_1, \cdots i_5$ are known, and the voltages at the different nodes are the unknown.

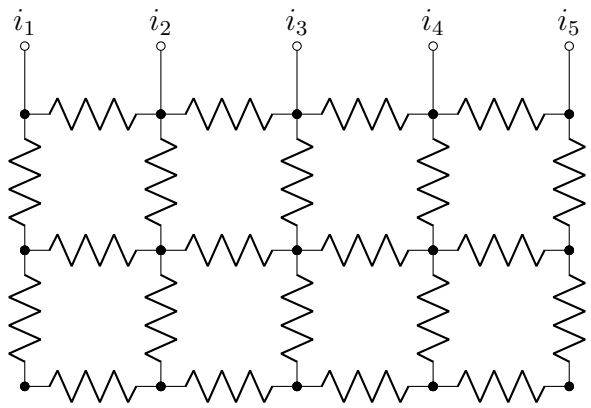

Figure 1.4: Caption

12. **Computed Tomography** (CT). (CT) is a medical imaging technique that is used to reconstruct the internal structure of an object from a set of X-ray measurements. The object is placed between an X-ray source and a detector. The X-ray source and the detector are rotated around the object, and the X-ray measurements are recorded at different angles. The X-ray measurements are then used to reconstruct the internal structure of the object.

    In the following figure (Figure 1.5), we have a simple square-shaped object with a 3 by 3 grid structure. Let's assume that the absorption coefficient ($\mu_{ij}, 1 \leq i, j \leq 3$)of each of these 9 cells are different, as indicated the different shade of gray. The length and width of each cell is d units. The dotted lines present a x-ray line shot through the body; three different scans are done: (a) horizontal, (b) vertical, and (diagonal). Each x-ray bean results in a single measurement; the start of the dotted arrow is the location of the x-ray beam source and the tip of the arrow is the location of the detector. The intensity of the x-ray beam is the known and fixed for all the beams $I_i = I_s$.

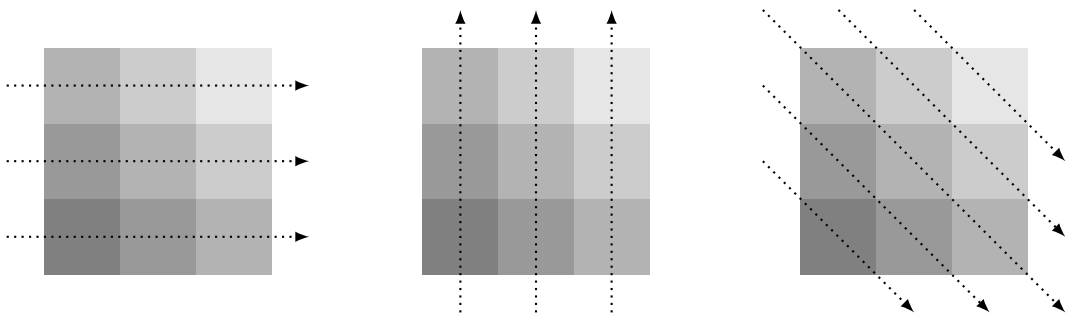

(a) Horizontal Scan (b) Vertical Scan (c) Diagonal Scans

Figure 1.5: A simplified CT set-up with A 3 by 3 object. Three different types of scans are done on the object: (a) horizontal, (b) vertical, and (c) diagonal.

The x-ray attenuation equation is given by,

$$I_o = I_i \exp(-\mu l)$$

where, I_i is the intensity of the x-ray entering an object with fixed attenuation coefficient μ, I_o is the intensity of the x-ray existing the object, and l is the path length of the x-ray in the object.

In general, the attenuation coefficient is a function of the position within the object, $\mu = \mu(x, y)$. The goal of CT is to reconstruct the spatial map of the attenuation coefficient $\mu(x, y)$.

Let L represent the line segment of the x-ray within the object as shown in Figure 1.5, and the attenuation outside the object is assumed to be zero. If I_s is the intensity of the x-ray leaving the source, the intensity of the x-ray reaching the detector I_d is given by,

$$I_d = I_s \exp\left(-\int_L \mu(x, y)\, dl\right)$$

where, dl is the differential length along the line segment L, which is a function of x, y. The integral in the above equation is the line integral of the attenuation coefficient $\mu(x, y)$ along the line segment L.

We wish to estimate the unknown absorption coefficients using a computer by posing this problem as a set of linear equations relating the attenuation coefficient $\mu(x, y)$ to the x-ray intensity measurements I_d. For simplicity, we will assume $I_s = 1$. First, we simplify the above integration equation by taking the log on both sides, which results in,

$$\ln I_d = -\int_L \mu(x, y)\, dl$$

Express the measurements from the horizontal, vertical, and diagonal scans as linear equations relating the measured x-ray intensity and the absorption coefficient, and the geometry of the object.

2. Linear Systems and Matrix Operations - 03

2.1 Tutorial Problems

1. Conisder the following matrices:

$$\mathbf{A} = \begin{bmatrix} 1 & 1 & -1 & 0 \\ 0 & 2 & -2 & 1 \\ -3 & 1 & 1 & 3 \end{bmatrix} \quad \text{and} \quad \mathbf{B} = \begin{bmatrix} 2 & 1 & 1 \\ 1 & -1 & 1 \\ 3 & 2 & 1 \\ 1 & 2 & 1 \end{bmatrix}$$

   (a) Find the product of the two matrices $\mathbf{C} = \mathbf{AB}$ using the four views of matrix muliplication.

   (b) If we change $b_{23} = 0$. Can you compute the new matrix $\mathbf{C}$ without performing the entire matrix muliplication again?

   (c) If we increase the value of the elements of the 3rd column of $\mathbf{A}$ by 1, how can we compute the new $\mathbf{C}$ without performing the entire matrix multiplication again?

   (d) If we insert a new row $\mathbf{1}^\top$ in $\mathbf{A}$ after the 2nd row of $\mathbf{A}$, how can we compute the new $\mathbf{C}$ without performing the entire matrix multiplication again?

2. **Computational cost of different operations.** What is the computational cost of the following matrix operations? Computational cost refers to the number of arithmetic operations required to carry out a particular matrix operation. Computational cost is a measure of the efficiency of an algorithm. For example, consider the operation of vector addition, $\mathbf{a} + \mathbf{b}$, where $\mathbf{a}, \mathbf{b} \in \mathbb{R}^n$. This requires n addition/subtraction operations and zero multiplication/division operations.

   (a) Matrix multiplication: $\mathbf{AB}$, where $\mathbf{A}, \mathbf{B} \in \mathbb{R}^{n \times n}$

   (b) Inner product: $\mathbf{u}^T\mathbf{v}$

   Report the counts for the addition/subtraction and multiplication/division operations separately.

3. Prove $(\mathbf{AB})^T = \mathbf{B}^T\mathbf{A}^T$.

4. Prove that a matrix $\mathbf{M} \in \mathbb{R}^{n \times n}$ can always be written as a sum of a symmetric matrix $\mathbf{S}$ and a skew-symmetric matrix $\mathbf{A}$.

$$\mathbf{M} = \mathbf{S} + \mathbf{A}, \;\; \mathbf{S}^T = \mathbf{S} \;\text{ and }\; \mathbf{A}^T = -\mathbf{A}$$

   Does this property also hold for a complex matrix $\mathbf{M} \in \mathbb{C}^{n \times n}$?

5. The trace of a matrix $\mathbf{A} \in \mathbb{R}^{n \times n}$ is defined as, $trace\,(\mathbf{A}) = \sum_{i=1}^{n} a_{ii}$. Prove the following,

   (a) $trace\,(\mathbf{A})$ is a linear function of $\mathbf{A}$.

   (b) $trace\,(\mathbf{AB}) = trace\,(\mathbf{BA})$

   (c) $trace\left(\mathbf{A}^T\mathbf{A}\right) = 0 \implies \mathbf{A} = 0$

6. Express the following set of linear equations as a matrix equation, $\mathbf{Ax} = \mathbf{b}$. Write down the exact dimensions of $\mathbf{A}, \mathbf{x}$ and $\mathbf{b}$, along with their elements. Write down the augmented matrix for each of these systems of equations.

(a)

$$\begin{aligned} 3x_1 + 4x_2 + 5x_3 &= 1 \\ 2x_1 + 3x_3 &= 2 \\ 4x_1 + 2x_2 - x_3 &= 3 \\ 5x_1 - 3x_2 + 4x_3 &= 4 \end{aligned}$$

(b)

$$\begin{aligned} y &= -23 \\ 3y &= 2 \\ \frac{1}{4}y &= 3 \end{aligned}$$

(c)

7. Find the complete solution for the following set of linear equations by reducing the augmented matrix to the reduced row echelon form. Find the rank of the matrix **A** and the augmented matrix, and list the number of basic and non-basic columns.

(a)

$$\begin{aligned} a + b + c + d &= 10 \\ 2a - b + d &= 5 \\ a + 3c - d &= 4 \\ b + c &= 3 \end{aligned}$$

(b)

$$\begin{aligned} 2x_1 + 3x_2 + x_3 + 4x_4 &= 25 \\ x_1 + 2x_2 + 3x_3 + x_4 &= 18 \\ 3x_1 + x_2 + 2x_3 + 5x_4 &= 32 \\ 4x_1 + 3x_2 + 2x_3 + x_4 &= 27 \\ 2x_1 + x_2 + 4x_3 + 3x_4 &= 29 \end{aligned}$$

8. A hospital has 10 wards: A_1 to A_{10}. The hospital employs 55 attendants who are be allocated to these wards on a daily basis. You are given the task of allocating the attendants to the wards based on the following requirements:

   (a) No attendant must be left unassigned.

   (b) No attendant can be assigned to more than one ward.

   (c) Even numbered wards have a high patient load than the odd numbered wards. Thus, the even numbers wards together will require 10 more attendants than the odd numbered wards.

   (d) Ward A_1 requires 2 more attendants than Ward A_3.

   (e) Ward A_2 requires twice as many attendants as Ward A_4.

   Is this problem solvable (do not worry about having fractional and negative solutions)? What is the rank of the coefficient matrix of this system of equations?

   Solve this set of linear equations to find the number of attendants allocated to each ward. Note that the number of attendants must be a non-negative integer. You might have to make approximations to get integer solutions.

2.2 Assignment

1. Express the following set of linear equations as a matrix equation, $\mathbf{Ax} = \mathbf{b}$. Write down the exact dimensions of $\mathbf{A}, \mathbf{x}$ and $\mathbf{b}$, along with their elements. Write down the augmented matrix for each of these systems of equations.

   (a)
$$\begin{aligned} 3z_5 + z_4 - 2z_6 + 2z_2 - z_3 + z_1 &= 5 \\ z_6 + 4z_3 - z_4 + 2z_1 - z_2 + z_5 + 3 &= 0 \\ 2z_4 + z_2 - z_5 + 3z_1 + 2z_3 + 4z_6 - 5 &= 2 \\ -2z_4 - z_6 + 2z_5 - z_1 + z_3 + 3z_2 &= 4 \end{aligned}$$

   (b)
$$\begin{aligned} 5f - 2i &= 3 \\ 2b - e &= -1 \\ c + 4g &= 8 \\ a + h &= 7 \\ -3d + j &= 2 \\ a + 3d - j &= 6 \\ 2b + e - g &= -4 \end{aligned}$$

2. Consider a matrix $\mathbf{A} \in \mathbb{R}^{10^6 \times 5}$, and we are interested in computing the product $\mathbf{A}^\top \mathbf{A} \mathbf{A}^\top$. Should you compute the product as $\left(\mathbf{A}^\top \mathbf{A}\right) \mathbf{A}^\top$ or $\mathbf{A}^\top \left(\mathbf{A}\mathbf{A}^\top\right)$? Why?

3. A hospital has four special wards - A, B, C, and D, which require beds, patient monitors, ventilators, and nursing staff to operate effectively. The allocation is planned on a monthly basis, depending on the expected number of patients in these wards on that month. For the upcoming month, the hospital has the following resources and requirements:

   (a) There are a total of 100 beds, 60 patient monitors, 30 ventilators, and 40 nurse staff available for allocation.

   (b) Wards A and B together will required 10 more beds than wards C and D together.

   (c) Ward A has twice the number of beds as C.

   (d) All wards require an equal number of patient monitors.

   (e) Wards B and D will not require any ventilators.

   (f) Ward A and C together requires thrice the number of nurse staff as wards B and D together.

   You are given the job of allocating the resources to the four wards.

   Is this problem solvable (do not worry about having fractional and negative solutions)? What is the rank of the coefficient matrix of this system of equations?

   Solve this set of linear equations to find the number of attendants allocated to each ward. Note that the number of attendants must be a non-negative integer. You might have to make approximations to get integer solutions.

4. A meal planner must determine the servings of four food items — chicken, rice, daal, and milk — so the total diet exactly meets the following nutritional targets each day:

   - Exactly 1,400 calories

- Exactly 90 grams of protein
- Exactly 40 grams of fat
- Exactly 150 grams of carbohydrates
- Exactly 150 mg of vitamin C

The nutritional content per serving for each of the four food items available to the meanl planner is as follows:

Food	**Calories**	**Protein (g)**	**Fat (g)**	**Carbs (g)**	**Vit C (mg)**
Chicken	220	43	5	0	0
Rice	200	4	0.5	45	0
Daal	50	4	0.5	10	75
Milk	100	9	2	11	2

Is this problem solvable (do not worry about having fractional and negative solutions)? What is the rank of the coefficient matrix of this system of equations?

Solve this set of linear equations to find the number of attendants allocated to each ward. Note that the number of attendants must be a non-negative integer. You might have to make approximations to get integer solutions.

5. A clinician is interested in estimating a patient's core body temperature T_{core} using multiple body surface measurements. Temperature sensors are placed at different body locations, each providing a reading that has a known proportional relationship to the core temperature. The measurements are:

   - Oral temperature: $T_{\text{oral}} = 0.95T_{\text{core}}$
   - Axillary (armpit) temperature: $T_{\text{axillary}} = 0.90T_{\text{core}}$
   - Tympanic (ear) temperature: $T_{\text{tympanic}} = 0.98T_{\text{core}}$
   - Forehead temperature: $T_{\text{forehead}} = 0.92T_{\text{core}}$

   During a clinical assessment, the following readings (in °C) are recorded: $T_{\text{oral}} = 36.5$, $T_{\text{axillary}} = 35.8$, $T_{\text{tympanic}} = 37.2$, $T_{\text{forehead}} = 36.0$. Formulate this as a system of linear equations to estimate T_{core}.

   Is this problem solvable (do not worry about having fractional and negative solutions)? What is the rank of the coefficient matrix of this system of equations?

   Solve this set of linear equations to find the number of attendants allocated to each ward. Note that the number of attendants must be a non-negative integer. You might have to make approximations to get integer solutions.

6. There is reason for you to believe that the proportionality constants relating the core temperature to body surface temperatures in the above problem are incorrect. So, you decide to do an experiment to estimate these proportionality constants by recruiting a sample of 100 healthy individuals on whom you make the following measurements:

   - Core body temperature using an invasive rectal thermometer (gold standard): $T_{\text{core}}^{(i)}$
   - Oral temperature: $T_{\text{oral}}^{(i)}$
   - Axillary temperature: $T_{\text{axillary}}^{(i)}$
   - Tympanic temperature: $T_{\text{tympanic}}^{(i)}$

- Forehead temperature: $T^{(i)}_{\text{forehead}}$

where $i = 1, 2, \ldots, 100$ denotes the individual subjects in your study. Assuming the linear model holds for each measurement location:

$$\begin{aligned} T^{(i)}_{\text{oral}} &= k_{\text{oral}}\, T^{(i)}_{\text{core}} \\ T^{(i)}_{\text{axillary}} &= k_{\text{axillary}}\, T^{(i)}_{\text{core}} \\ T^{(i)}_{\text{tympanic}} &= k_{\text{tympanic}}\, T^{(i)}_{\text{core}} \\ T^{(i)}_{\text{forehead}} &= k_{\text{forehead}}\, T^{(i)}_{\text{core}} \end{aligned}$$

Formulate a system of linear equations to relating the known measurements from the 100 subjects to the four unknown proportionality constants k_{oral}, k_{axillary}, k_{tympanic}, and k_{forehead}.

Is this problem solvable (do not worry about having fractional and negative solutions)?

7. You are performing an experiment to characterize a force sensor, which is known to have non-linear response characteristics. You apply 3 different known forces to the sensor and record the sensor output voltage for the 3 forces. You hypothesize that the relationship

Force (N)	**Sensor voltage** (V)
1	0.5
2	0.75
3	1.2

between the applied force and the sensor voltage can be modeled as a polynomial function of order 2:

$$v = \beta_0 + \beta_1 f + \beta_2 f^2$$

We wish to use the experimental data to estimate the parameters β_0, β_1, and β_2 of this model. Can this problem be formulated as a set of linear equations? Is this problem solvable?

Later one you speak to a colleague who suggests that a cubic polynomial model might be more appropriate. Can the problem of fitting a cubic polynomial still be formulated as a set of linear equations now? Is this problem solvable with our current data?

You need to interface this sensor to a microcontroller and you find that this microcontroller can only handle polynomial functions or order 1. So you decide to fit a order 1 polynomial model for your sensor. Can this problem also be formulated as a set of linear equations? Is this problem solvable with our current data?

2.3 Additional Problems

1. Consider the following 5×4 matrix:

$$\mathbf{A} = \begin{bmatrix} 1 & -1 & 0 & 2 & 2 \\ 1 & -2 & 1 & 3 & 9 \\ -2 & 0 & 2 & -1 & -2 \\ 3 & 1 & 1 & -5 & 0 \end{bmatrix}$$

Compute the following:

(a) $\mathbf{a}_3$

(b) $\mathbf{a}_1^\top$

(c) $\tilde{\mathbf{a}}_2^\top$

(d) $\tilde{\mathbf{a}}_4$

(e) $\mathbf{a}_1\mathbf{a}_2^\top$

(f) $\tilde{\mathbf{a}}_3\mathbf{a}_2^\top$

(g) $\tilde{\mathbf{a}}_1\tilde{\mathbf{a}}_2^\top$

(h) $\tilde{\mathbf{a}}_1^\top\tilde{\mathbf{a}}_2$

(i) $\tilde{\mathbf{a}}_1\tilde{\mathbf{a}}_1^\top + \tilde{\mathbf{a}}_2\tilde{\mathbf{a}}_2^\top$

(j) $\mathbf{a}_3^\top\mathbf{a}_1 + \mathbf{a}_2^\top\mathbf{a}_4$

2. Consider the matrix $\mathbf{P} = \begin{bmatrix}\mathbf{e}_1 & \mathbf{e}_3 & \mathbf{e}_2\end{bmatrix}$. What does this P matrix do to a matrix $\mathbf{A} \in \mathbb{R}^{3\times 3}$ in the following operations? Try to compute these without performing the matrix multiplication and by using you understaning of the row and column views of matrix multiplication.

   (a) $\mathbf{PA}$

   (b) $\mathbf{AP}$

   (c) $\mathbf{P}^2\mathbf{A}$

   (d) $\mathbf{AP}^2$

   (e) $\mathbf{PAP}$

3. Linear Systems and Matrix Operations - 04

3.1 Tutorial Problems

3.1.1 Orthogonality

1. If the columns of a matrix $\mathbf{A} \in \mathbb{R}^{n\times n}$ are orthonormal, prove that $\mathbf{A}^{-1} = \mathbf{A}^\top$. What is $\mathbf{A}^\top\mathbf{A}$ when $\mathbf{A}$ is rectangular ($\mathbf{A} \in \mathbb{R}^{m\times n}$) with orthonormal columns?

2. What will happen when the Gram-Schmidt procedure is applied to: (a) orthonormal set of vectors; and (b) orthogonal set of vectors? If the set of vectors are columns of a matrix $\mathbf{A}$, then what are the corresponding $\mathbf{Q}$ and $\mathbf{R}$ matrices for the orthonormal and orthogonal cases?

3. Consider two orthogornal matrices $\mathbf{Q}_1$ and $\mathbf{Q}_2$. Is the $\mathbf{Q}_2^\top\mathbf{Q}_1$ an orthogonal matrix? If yes, prove that it is so, else provide a counter-example showing $\mathbf{Q}_2^\top\mathbf{Q}_1$ is not orthogonal.

4. Consider a 1 dimensional subspace spanned by the vector $\mathbf{u} \in \mathbb{R}^n$. What kind of a geometric operation does the matrix $\mathbf{I} - 2\frac{\mathbf{u}\mathbf{u}^T}{\mathbf{u}^T\mathbf{u}}$ represent?

5. Does the set of all orthogonal matrices of size $n \times n$ form a vector space? Justify your answer.

6. Prove that when a triangular matrix is orthogonal, it is diagonal.

3.1.2 Matrix Inverses

1. Let $\mathbf{A} \in \mathbb{R}^{n\times n}$ be an invertible matrix. Show that the ith row of $\mathbf{A}$ is orthogonal to all columns of $\mathbf{A}^{-1}$ except the ith column. Similarly, show that the ith column of $\mathbf{A}$ is orthogonal to all rows of $\mathbf{A}^{-1}$ except the ith row.

2. When does the following diagnoal matrix have an inverse? **[Marks: 1]**

$$\mathbf{D} = \begin{bmatrix} d_1 & 0 & \cdots & 0 \\ 0 & d_2 & \cdots & 0 \\ \vdots & \vdots & \ddots & \vdots \\ 0 & 0 & \cdots & d_n \end{bmatrix}$$

   Write down an expression for $\mathbf{D}^{-1}$.

3. Consider a matrix $\mathbf{A} \in \mathbb{R}^{m\times n}$ with linearly independent columns. Prove that the Gram matrix $\mathbf{A}^T\mathbf{A}$ is invertible.

4. Consider two non-singular matrices $\mathbf{A}, \mathbf{B} \in \mathbb{R}^{n\times n}$. Explain whether or not the following matrices are invertible. If they are, then provide an expression for it inverse.

   (a) $\mathbf{C} = \mathbf{A} + \mathbf{B}$

   (b) $\mathbf{C} = \begin{bmatrix} \mathbf{A} & \mathbf{0} \\ \mathbf{0} & \mathbf{B} \end{bmatrix}$

   (c) $\mathbf{C} = \begin{bmatrix} \mathbf{A} & \mathbf{A}+\mathbf{B} \\ \mathbf{0} & \mathbf{B} \end{bmatrix}$

   (d) $\mathbf{C} = \mathbf{ABA}$

5. For a square matrix $\mathbf{A}$ with non-signular $\mathbf{I} - \mathbf{A}$, prove that,

$$\mathbf{A}\left(\mathbf{I} - \mathbf{A}\right)^{-1} = \left(\mathbf{I} - \mathbf{A}\right)^{-1}\mathbf{A}$$

6. Consider the non-singular matrices $\mathbf{A}$, $\mathbf{B}$ and $\mathbf{A} + \mathbf{B}$. Prove that,

$$\mathbf{A}\left(\mathbf{A} + \mathbf{B}\right)^{-1}\mathbf{B} = \mathbf{B}\left(\mathbf{A} + \mathbf{B}\right)^{-1}\mathbf{A} = \left(\mathbf{A}^{-1} + \mathbf{B}^{-1}\right)^{-1}$$

3.2 Assignment

1. Derive force and displacement relationship for a series of $n+1$ springs (with spring constants k_i) connected in a line. There are n nodes, with f_i and x_i representing the force applied and resulting displacement at the ith node.

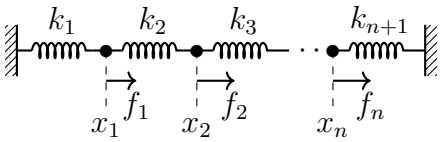

   (a) Represent the relationship in the following form,

$$\mathbf{f} = \mathbf{K}\mathbf{x}; \;\; \mathbf{f} = \begin{bmatrix} f_1 \\ f_2 \\ \vdots \\ f_n \end{bmatrix}; \;\; \mathbf{x} = \begin{bmatrix} x_1 \\ x_2 \\ \vdots \\ x_n \end{bmatrix}$$

   (b) What kind of a pattern does $\mathbf{K}$ have?

   (c) **[Programming]** Consider a specific case where $n = 4$ and $k = 1.5N.m^{-1}$. What should be forces applied at the four nodes in order to displace the spring $\mathbf{x} = \begin{bmatrix} 0.5 \\ -0.5 \\ 0 \\ 0 \end{bmatrix} m$.

2. Consider the following electrical circuit with rectangular grid of resistors R. The input to this grid is a set of current injected at the top node as shown in the figure, such that $\sum_{k=1}^{5} i_k = 0$.

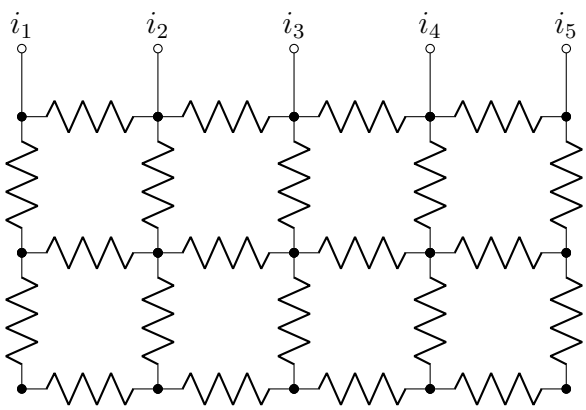

Express the relationship between the voltages at the different nodes (represented by • in the figure) and the net current flowing in/out of the node in the following form, $\mathbf{Gv} = \mathbf{i}$. Where, $\mathbf{G}$ is the conductance matrix, $\mathbf{v}$ is the vector of node voltages, and $\mathbf{i}$ is the vector representing the net current flow in/out of the different node. Note that you will need to impose the following additional constraints to solve for the node voltages, $\sum_{k=1}^{5} i_k = 0$.

(a) The voltage drop across a loop (closed path) is zero.

(b) Assume the node with the last current injection i_5 is grounded, i.e., its node voltage is zero.

3. **Ill-conditioned systems.** A system $\mathbf{Ax} = \mathbf{b}$ is said to be ill-conditioned when small changes in the components of $\mathbf{A}$ or $\mathbf{b}$ can produce large changes in the solution $\mathbf{x}$. Consider the following system,

$$\begin{aligned} x - y &= 100 \\ 10 + (9 + \Delta)\, y &= 0 \end{aligned}$$

[Programming] Find the solutions of the system for different values of $\Delta = -2, -1, 0, 1, 2$. How do the solutions change with Δ?

Now consider the following system,

$$\begin{aligned} x - y &= 100 \\ 10 - (9 + \Delta)\, y &= 0 \end{aligned}$$

[Programming] Find the solutions of the system for different values of $\Delta = -2, -1, 0, 1, 2$. How do the solutions change with Δ?

The second system is an example of an ill-conditioned system. What differnce do you see in the columns of these two systems of equations?

4. **Connectivity matrices.** Another common application of matrices is in graph theory. A graph is a set of vertices or nodes connected by edges, as show in the following figure. A-F are the nodes of the graph, and the lines with the arrows are the edges that convey information about the connections or relationships between the nodes.

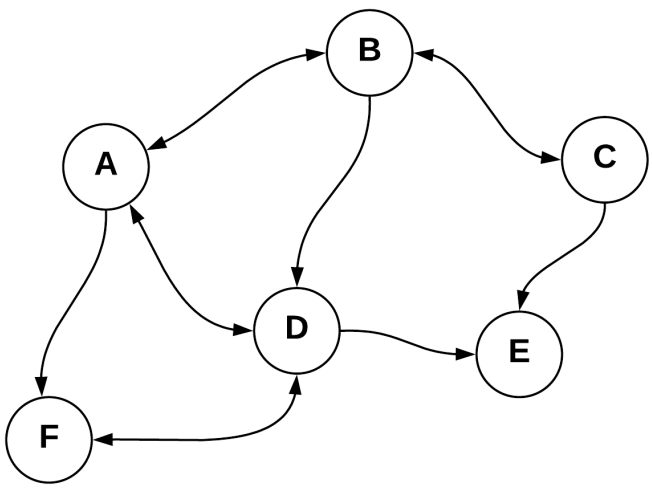

The above graph can be thought as a representation of different places in a city (represented by the nodes), and the lines with the arrows represent the roads connecting these different places. A line with two arrows allow two-way traffic, while line with single arrow only

allow one way traffic. The connectivity between the different places can be summarized though the connectivity matrix $\mathbf{C} \in \mathbb{R}^{n \times n}$, where n is the number of nodes in the graph. The elements of this connectivity matrix represents whether or not there is a direct path between two places.

$$c_{ij} = \begin{cases} 1 & \text{there is a directed edge from } i \text{ to } j. \\ 0 & \text{otherwise.} \end{cases}$$

The diagonal element of $\mathbf{C}$ are zero, $c_{ii} = 0$.

Write down the connectivity matrix $\mathbf{C}$ for the graph shown above. Explain what the following matrix operations tell us.

(a) $\mathbf{C1}$, where $\mathbf{1} \in \mathbb{R}^n$ is the vector of all ones.

(b) $\mathbf{1}^\top \mathbf{C}$, where $\mathbf{1}^\top$ is the transpose of the vector of all ones.

(c) $\mathbf{1}^\top \mathbf{C1}$

(d) $\mathbf{e}_i^\top \mathbf{C} \mathbf{e}_k \mathbf{e}_k^\top \mathbf{C} \mathbf{e}_j$

(e) $\sum_{k=1}^n \mathbf{e}_i^\top \mathbf{C} \mathbf{e}_k \mathbf{e}_k^\top \mathbf{C} \mathbf{e}_j$

(f) $\sum_{j=1}^n \sum_{k=1}^n \mathbf{e}_i^\top \mathbf{C} \mathbf{e}_k \mathbf{e}_k^\top \mathbf{C} \mathbf{e}_j$

(g) $\sum_{i=1}^n \sum_{j=1}^n \sum_{k=1}^n \mathbf{e}_i^\top \mathbf{C} \mathbf{e}_k \mathbf{e}_k^\top \mathbf{C} \mathbf{e}_j$

Express the answers to the following questions as matrix operations involving the connectivity matrix $\mathbf{C}$.

(a) The number of single-stop path between i and j going via k?

(b) The number of two-stop path between i and j going via k?

(c) Does a given node have only bidirectional edges?

5. **Computed Tomography** (CT). (CT) is a medical imaging technique that is used to reconstruct the internal structure of an object from a set of X-ray measurements. The object is placed between an X-ray source and a detector. The X-ray source and the detector are rotated around the object, and the X-ray measurements are recorded at different angles. The X-ray measurements are then used to reconstruct the internal structure of the object.

   In the following figure (Figure 1.5), we have a simple square-shaped object with a 3 by 3 grid structure. Let's assume that the absorption coefficient $(\mu_{ij}, 1 \leq i, j \leq 3)$of each of these 9 cells are different, as indicated the different shade of gray. The length and width of each cell is d units. The dotted lines present a x-ray line shot through the body; three different scans are done: (a) horizontal, (b) vertical, and (diagonal). Each x-ray bean results in a single measurement; the start of the dotted arrow is the location of the x-ray beam source and the tip of the arrow is the location of the detector. The intensity of the x-ray beam is the known and fixed for all the beams $I_i = I_s$.

   The x-ray attenuation equation is given by,

$$I_o = I_i \exp(-\mu l)$$

   where, I_i is the intensity of the x-ray entering an object with fixed attenuation coefficient μ, I_o is the intensity of the x-ray existing the object, and l is the path length of the x-ray in the object.

   In general, the attenuation coefficient is a function of the position within the object, $\mu = \mu(x, y)$. The goal of CT is to reconstruct the spatial map of the attenuation coefficient $\mu(x, y)$.

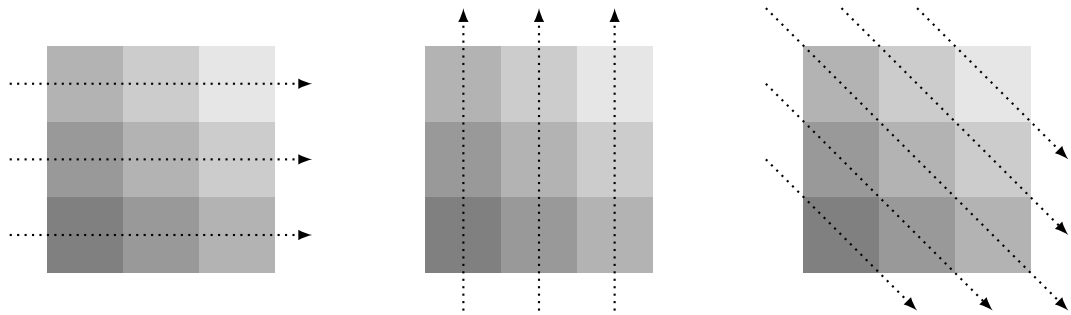

(a) Horizontal Scan (b) Vertical Scan (c) Diagonal Scans

Figure 3.1: A simplified CT set-up with A 3 by 3 object. Three different types of scans are done on the object: (a) horizontal, (b) vertical, and (c) diagonal.

Let L represent the line segment of the x-ray within the object as shown in Figure 1.5, and the attenuation outside the object is assumed to be zero. If I_s is the intensity of the x-ray leaving the source, the intensity of the x-ray reaching the detector I_d is given by,

$$I_d = I_s \exp\left(-\int_L \mu\left(x, y\right) dl\right)$$

where, dl is the differential length along the line segment L, which is a function of x, y. The integral in the above equation is the line integral of the attenuation coefficient $\mu\left(x, y\right)$ along the line segment L.

We wish to estimate the unknown absorption coefficients using a computer by posing this problem as a set of linear equations relating the attenuation coefficient $\mu\left(x, y\right)$ to the x-ray intensity measurements I_d. For simplicity, we will assume $I_s = 1$. First, we simplify the above integration equation by taking the log on both sides, which results in,

$$\ln I_d = -\int_L \mu\left(x, y\right) dl$$

Express the measurements from the horizontal, vertical, and diagonal scans as linear equations relating the measured x-ray intensity and the absorption coefficient, and the geometry of the object.

[Programming] Write a python program to compute and plot the detector output for the different scan angles. In Figur 3.1. The individual pixels have attenuation coefficients of 1 to 9, with the ligher shades having lower attenuation coefficients.

3.3 Additional Problems

1. **Planar multijoint arm kinematics.** Consider a three-link arm planar arm shown in the following figure. Can you derive the expression for the kinematics of this arm relating the joint angle positions $\theta_1, \theta_2, \theta_3$ to the end point positons x, y of the arm.

   Derive the differential kinematics of the arm, expressing the end point velocity vector $\mathbf{v} = \begin{bmatrix}\dot{x} & \dot{y}\end{bmatrix}^\top \in \mathbb{R}^2$ to the joint velocity vector $\boldsymbol{\omega} = \begin{bmatrix}\dot{\theta}_1 & \dot{\theta}_2 & \dot{\theta}_3\end{bmatrix}^\top$. What shape is the Jacobian matrix $\mathbf{J}$? What are the minimum nad maximum rank of this matix?

   For $\theta_1 = 0\,\text{deg}$, $\theta_2 = 90\,\text{deg}$, and $\theta_3 = 0\,\text{deg}$, and $l_1 = l_2 = l_3 = 1$, find the solution for $\boldsymbol{\omega}$ for $\mathbf{v} = \begin{bmatrix}1 & 1\end{bmatrix}^\top$. Is there a unique solution to this problem? Why do we not have a unique solution?

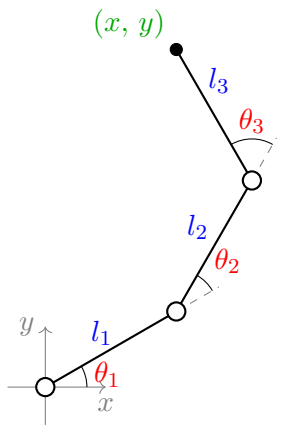

Figure 3.2: 3-link planar arm.

Is there a set of joint angles $\theta_1, \theta_2, \theta_3$ where the matrix $\mathbf{J}$ is singular?

4. Linear Systems and Matrix Operations - 04

4.1 Tutorial Problems

4.1.1 Linear Least Squares

1. Consider the following polynomial equation,

$$y = \sum_{i=0}^{n} \beta_i x^i, \quad x, y, \beta_i \in \mathbb{R}$$

This expression is linear in the polynomial coefficients. Fitting a polynomial to data can be done through a linear least square procedure. Conisder a set of measurements $\{(x_l, y_l)\}_{l=1}^{m}$. We are interested in fitting a polynomial that fits this data, such that the difference between the polynomial and data is as low as possible.

$$\begin{bmatrix} y_1 \\ y_2 \\ \vdots \\ y_m \end{bmatrix} = \begin{bmatrix} 1 & x_1 & x_1^2 & \cdots & x_1^n \\ 1 & x_2 & x_2^2 & \cdots & x_2^n \\ \vdots & \vdots & \vdots & \ddots & \vdots \\ 1 & x_m & x_m^2 & \cdots & x_m^n \end{bmatrix} \begin{bmatrix} \beta_0 \\ \beta_1 \\ \vdots \\ \beta_n \end{bmatrix}$$

$$\mathbf{y} = \mathbf{X}\boldsymbol{\beta}$$

$\mathbf{X}$ is called the *Vandermonde* matrix. To estimate β through a least squares procedure, $\mathbf{X}$ must have independent columns. Prove that for a set of different x_is the *Vandermonde* matrix has independent columns.

You are provided with CSV format data file (polyfit.csv) containing data $\{(x_l, y_l)\}_{l=1}^{m}$, to which you are required to fit a polynomial function. The choice of the order of the polynomial is up to you. This can be come from *a priori* knowledge of the system from which data is collected, or it can be decided based on eyeballing the scatter plot between x_i and y_i.

(a) **Data fitting error**: Fit polynomials of orders 0 to 10 to the given data, and for each order determine the data fitting error.

$$e_n = \left\| \mathbf{X}\hat{\boldsymbol{\beta}} - \mathbf{y} \right\|$$

Plot e_n versus the polynomial model order n. You should observe the fitting error to monotonically decrease as a function fo n. Why is this? Can e_n ever be zero?

(b) **Model validation**: Even though increasing the polynomial order decreases the data fitting error, this is not always desirable. Given that noise in ubiquitous in all measurements, increasing model order will result in a polynomial that not only fits the general trend in the data, but also the observed measurement noise. Thus, the optimal choice for the model order is determined through a validation procedure, where the data is split into two sets - *training* set and a *testing* set. In order to understand this, you are required to:

i. Split your data D into two sets of size 80% and 20%, corresponding to the *training* D_{train} and *testing* D_{test} sets; these percentages are arbitrary. Split you data randomly, such that each data entry is randomly assigned to D_{train} and D_{test}.

ii. Fit the polynomial model of a particular order to D_{train}. Let the model parameters obtained be $\hat{\boldsymbol{\beta}}$. The validation error for this model is defined as the following.

$$e_n^{val} = \left\| \mathbf{X}\hat{\boldsymbol{\beta}} - \mathbf{y} \right\|$$

where, $\mathbf{X}$ and $\mathbf{y}$ comes from the test data set D_{test}. Estimate the validation error for different models order 0 to 10, and plot e_n^{val} versus the polynomial model order n. How is this plot different from the plot e_n versus n? What is the optimal choice for the model order based on the validation procedure?

(c) **Regularized data fitting**: Instead of minimzing $\|\mathbf{X}\boldsymbol{\beta} - \mathbf{y}\|^2$ of the data, now fit a model that minimizes, $\|\mathbf{X}\boldsymbol{\beta} - \mathbf{y}\|^2 + \lambda\boldsymbol{\beta}^\top\boldsymbol{\beta}$, where $\lambda \geq 0$. In this particular case fit the model order to a high value (e.g. 10) and the entire data set D. Perform the data ditting procedure for different values of λ. Plot $\|\mathbf{X}\boldsymbol{\beta} - \mathbf{y}\|$ verus λ. Compare the values of $\hat{\boldsymbol{\beta}}$ for the different values of λ and compare these to your optimal choice of model parameters from the previous question.

2. Consider a time series $\mathbf{x} = \{x_0, x_1, \ldots x_{N-1}\}$ consisting of N data points, where n indicates time index. The time series is corrupted by noise, and we are interested in filtering the time series to obtain a smooth estimate of the the general trend in the time series. This can be posed a problem of estimating a new time series $\hat{\mathbf{x}}$, such that the difference $\mathbf{x} - \hat{\mathbf{x}}$ is minimized and $\hat{\mathbf{x}}$ is smooth, i.e. the adjacent values of the signal do not change abruptly.

$$O(\hat{x}) = \sum_{i=1}^{N} (x_i - \hat{x}_i)^2 + \lambda \sum_{i=2}^{N-1} (2\hat{x}_i - \hat{x}_{i-1} - \hat{x}_{i+1})^2$$

If $\mathbf{x}$ and $\hat{\mathbf{x}}$ are considered as N-vectors, then this can eb written as

$$O(\hat{\mathbf{x}}) = \|\mathbf{x} - \hat{\mathbf{x}}\|^2 + \lambda \|\mathbf{D}\hat{\mathbf{x}}\|^2$$

You are provided with a CSV data file (timeseries.csv) consisting of a time series. Filter this time series by minimizing $O(\hat{\mathbf{x}})$ for different values of λ. Plot $\mathbf{x}$ and $\hat{\mathbf{x}}$ for different values of λ. What role does λ play in the minimzation problem?

3. Trialteration is a process of determining the position $\mathbf{x} = \begin{bmatrix} x_1 & x_2 \end{bmatrix}^\top$ of a point P given the distance of the point from a N control points of known locations $\mathbf{a}_1, \mathbf{a}_2, \ldots \mathbf{a}_N$. At any given point in time n, we have N different measurements corresponding to the distance of the point P from the N control points, i.e.

$$\mathbf{d}_n = \begin{bmatrix} d_{n1} & d_{n2} & \cdots & d_{nN} \end{bmatrix}^\top$$

where, $d_{ni}^2 = \|\mathbf{x}_n - \mathbf{a}_i\|_2^2$ for all $1 \leq i \leq N$.

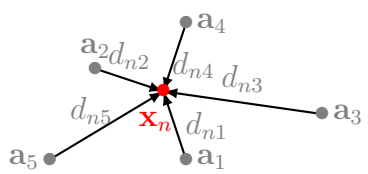

$\mathbf{x}_n$ are nonlinear functions of the measurements and the control point locations. However, taking the difference between two squared distance measurements d_j^2 and d_i^2 results in linear equations in the unknown coordinates,

$$(\mathbf{a}_i - \mathbf{a}_j)^\top \mathbf{x} = \frac{\left(d_j^2 - \|\mathbf{a}_j\|_2^2\right) - \left(d_i^2 - \|\mathbf{a}_i\|_2^2\right)}{2}$$

Consider the point P that moves with time; $\mathbf{x}_n \in \mathbb{R}^2$ represents the location of the point at time instant n. The distance of this point from a set of 50 different control points is given to you in a CSV data file (trilatdist.csv); the data rows correspond to distance measurements from the different control points at a given point in time, while the colums correpond to the distance of the point from a particular control point for all time. The locations of the 50 control points are available in a separate fileCSV file (trilatctrlpos.csv). Each of these distance measurements is affected by noise. You aim is to use these distance measurements to reconstruct the trajecotry of the point $\mathbf{x}_n$ as a function of time.

(a) What is the minimum number of distance measurements you need to estimate the unknown coordinates of the point $\mathbf{x}$?

(b) You are provided the actual trajectory of point P in the file trilatactpos.csv. How does you estimate compare with that of the actual trajectory? If we are informed that the point P does not undergo large changes in position between two consecutive time instants $n-1$ and n, how would you use this information to improve your estimate?

4. The least square approximate solution to problem $\mathbf{Ax} = b, \mathbf{A} \in \mathbb{R}^{m\times n}$ is obtained by minimizing the following objective fucntion,

$$O(\mathbf{x}) = \|\mathbf{Ax} - \mathbf{b}\|^2 = \sum_{i=1}^{m} \left(\tilde{\mathbf{a}}_i^\top \mathbf{x} - \mathbf{b}_i\right)^2$$

If the the objective function was defined differently, where the different components were given different weights for the different terms,

$$O_w(\mathbf{x}) = \sum_{i=1}^{m} w_i \left(\tilde{\mathbf{a}}_i^\top \mathbf{x} - \mathbf{b}_i\right)^2$$

This is the *weighted least squares*. Find the expression for the approximate solution of the weighted least squares problem.