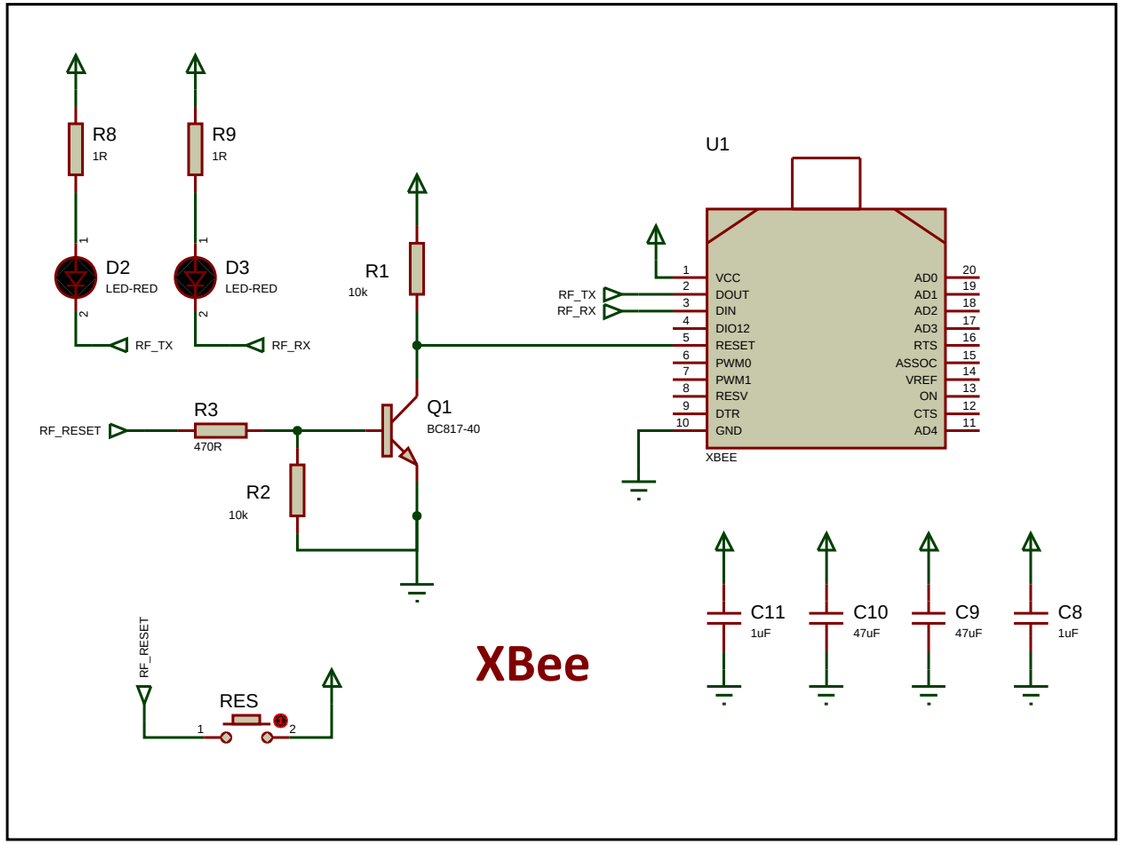
XBee
R8
1R
R9
1R
D2
LED-RED
D3
LED-RED
RF_TX
RF_RX
R1
10k
U1
RF_TX
RF_RX
VCC
DOUT
DIN
DIO12
RESET
PWM0
PWM1
RESV
DTR
GND
AD0
AD1
AD2
AD3
RTS
ASSOC
VREF
ON
CTS
AD4
XBEE
RF_RESET
R3
470R
Q1
BC817-40
R2
10k
C11
1uF
C10
47uF
C9
47uF
C8
1uF
RF_RESET
RES

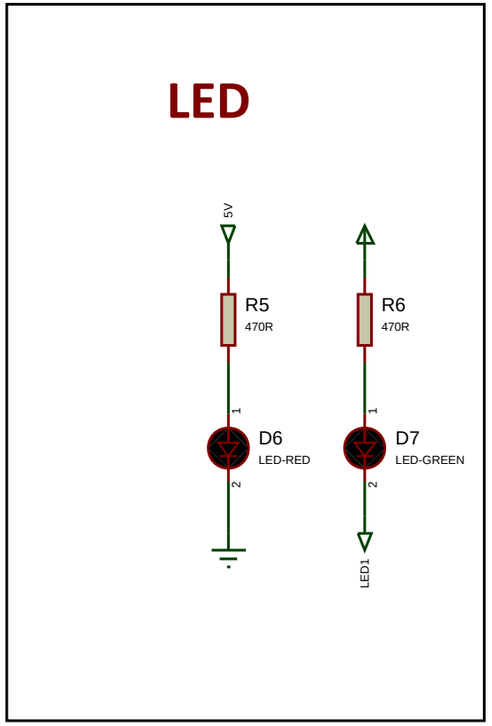
LED
5V
R5
470R
R6
470R
D6
LED-RED
D7
LED-GREEN
LED1

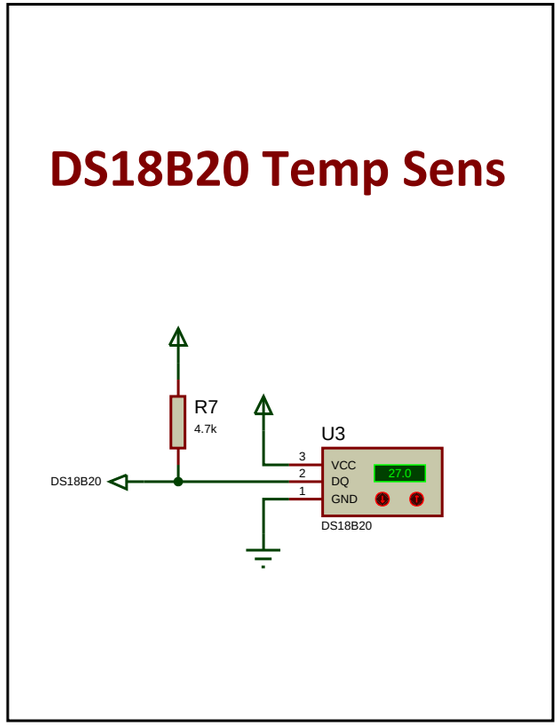
DS18B20 Temp Sens
R7
4.7k
U3
DS18B20
VCC
DQ
GND
27.0
DS18B20

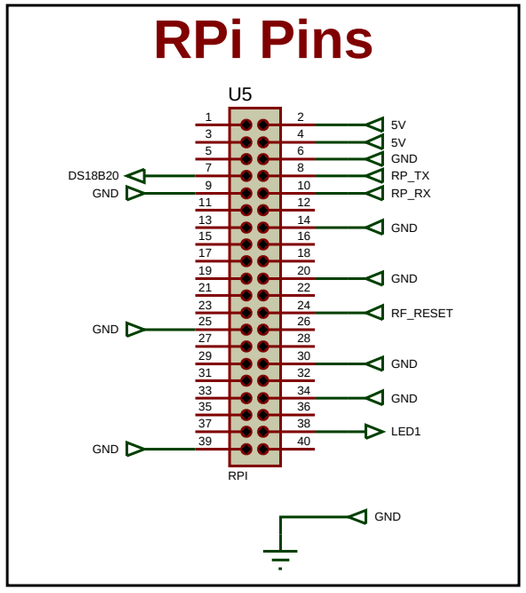
RPi Pins
U5
5V
5V
GND
RP_TX
RP_RX
GND
GND
RF_RESET
GND
GND
GND
LED1
GND
DS18B20
GND
RPI
GND

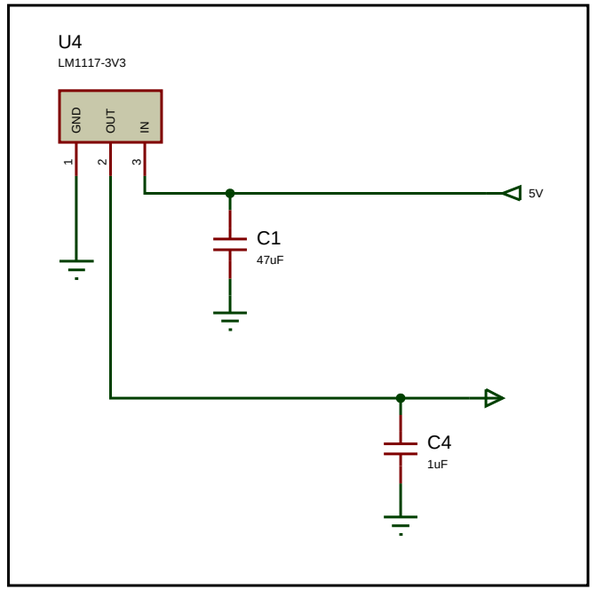
U4
LM1117-3V3
GND
OUT
IN
5V
C1
47uF
C4
1uF

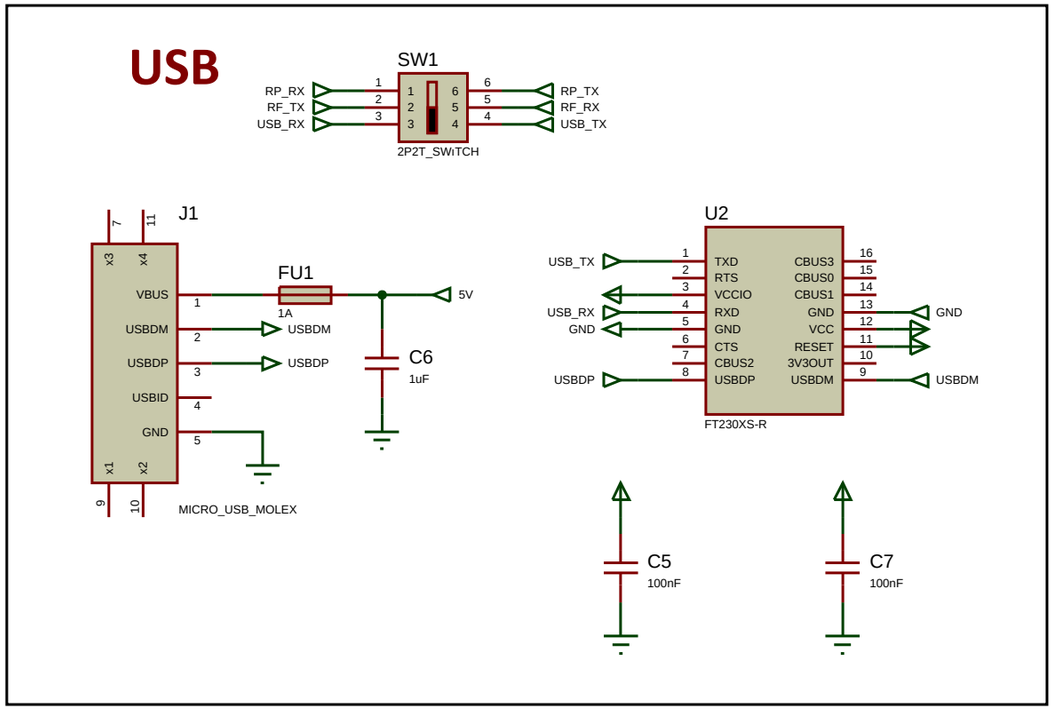
USB
SW1
RP_RX
RF_TX
USB_RX
RP_TX
RF_RX
USB_TX
2P2T_SWiTCH
J1
VBUS
USBDM
USBDP
USBID
GND
MICRO_USB_MOLEX
FU1
1A
5V
USBDM
USBDP
C6
1uF
U2
USB_TX
USB_RX
GND
USBDP
TXD
RTS
VCCIO
RXD
GND
CTS
CBUS2
USBDP
CBUS3
CBUS0
CBUS1
GND
VCC
RESET
3V3OUT
USBDM
GND
USBDM
FT230XS-R
C5
100nF
C7
100nF