Deepfake Detection via Spatial-Frequency Attention Network

Siyou Guo, Mingliang Gao, *Senior Member, IEEE*, Guisheng Zhang, Changcun Liu, and Qilei Li, *Member, IEEE*

***Abstract*—Artificial Intelligence Generated Content (AIGC) makes creating realistic synthetic media a breeze. Facial forgery technologies threaten consumer electronics, such as smartphones, intelligent payment systems, and smart home Internet of Things (IoT) devices. These threats undermine identity authentication security and compromise user privacy. To address this problem, this paper introduces a wavelet-based Spatial and Frequency Domain Attention Network (SFANet) for deepfake detection. The SFANet comprises a wavelet transform-based feature decoupling module, a dual attention module, and a cross-modality fusion module. The spatial features are first decomposed into high- and low-frequency components by wavelet transform. Subsequently, a dual attention mechanism is built to adjust frequency-domain weights dynamically. Finally, a cross-modality fusion module is introduced to integrate spatial and frequency-domain features for enhanced detection. Experimental results on three benchmark datasets, namely FaceForensics++, WildDeepfake, and Celeb-DF V2, prove that SFANet achieves superior detection performance compared to state-of-the-art models. This research provides a powerful tool to combat AI-driven misinformation and advances the field of synthetic content detection in consumer electronics. The implementation of SFANet will be publicly available at https://github.com/siyouguo/SFANet.**

***Index Terms*—Deepfake detection, frequency domain, wavelet transform, attention mechanism, cross-domain fusion.**

I. Introduction

RAPID advancements in AIGC have profoundly reshaped the digital information landscape. While this technological leap offers innovative applications, it also introduces critical challenges [1], particularly in consumer electronics, which is a domain heavily reliant on biometric authentication and trusted interactions. The proliferation of deepfake technologies poses significant threats to security and privacy in contexts such as smartphone-based facial recognition for payments, smart home device access control, and IoT-driven personalized services.

In these scenarios, forged facial data can bypass authentication systems to initiate fraudulent transactions, compromise privacy in smart homes, or manipulate voice-activated commands in connected devices [2]. Such risks undermine the trust consumers place in their electronic devices, which are integral to daily life and increasingly involved in sensitive activities. Therefore, ensuring robust deepfake detection is paramount to safeguarding user identity and privacy in the consumer electronics ecosystem.

Deepfake detection has attracted significant attention, with numerous approaches being proposed to address the challenge [3]. Traditional methods primarily rely on spatial domain cues, such as unnatural facial dynamics and pixel-level anomalies. While spatial-domain techniques offer high interpretability and work well to detect visible inconsistencies, they struggle to capture subtle artifacts that are only apparent in specific frequencies.

Frequency-domain methods have recently gained attention for their ability to capture subtle artifacts often missed in the spatial domain [4], [5], [6]. The Fourier transform-based models excel at detecting high-frequency details, which are crucial for identifying deepfake artifacts [5]. However, they are unable to capture multi-resolution features. The Haar wavelet transform offers a powerful multi-resolution decomposition technique that can efficiently analyze both fine-grained details and overarching structural patterns. This capability has made wavelet transforms widely used in tasks such as perceptual image hashing [7], image restoration [8], and saliency detection [9]. Unlike Fourier transforms, wavelet transforms can capture localized frequency details at various scales, making them ideal for deepfake detection.

Existing approaches integrate wavelet transforms into the convolutional layers of neural networks. However, directly substituting spatial domain features with frequency domain ones can result in the loss of essential spatial information. To overcome this limitation, we introduced a framework termed SFANet that synergistically integrates spatial and frequency-domain features for enhanced deepfake detection. Leveraging the Haar wavelet transform, SFANet performs multi-resolution analysis to extract fine-grained details and overarching structural patterns [10]. This framework includes a Haar wavelet decomposer that separates input features into high- and low-frequency components. This can offer a richer representation of content. Meanwhile, SFANet introduces a dual-attention

Received 25 March 2025; revised 7 May 2025, 29 August 2025, and 8 September 2025; accepted 23 September 2025. Date of publication 26 September 2025; date of current version 8 December 2025. This work was supported by the Shandong Province Undergraduate Teaching Reform Project under Grant Z2024184. *(Corresponding authors: Mingliang Gao; Qilei Li.)*

Siyou Guo, Mingliang Gao, Guisheng Zhang, and Changcun Liu are with the Shandong Provincial Key Laboratory of New Power Distribution and Utilization Technology and Equipment, School of Electrical and Electronic Engineering, Shandong University of Technology, Zibo 255000, China (e-mail: 23504030565@stumail.sdut.edu.cn; mlgao@sdut.edu.cn; 22504030001@stumail.sdut.edu.cn; 24404020554@stumail.sdut.edu.cn).

Qilei Li is with the Faculty of Artificial Intelligence in Education, Central China Normal University, Wuhan 430079, China (e-mail: qilei.li@ccnu.edu.cn).

Digital Object Identifier 10.1109/TCE.2025.3614720

1558-4127 © 2025 IEEE. All rights reserved, including rights for text and data mining, and training of artificial intelligence and similar technologies. Personal use is permitted, but republication/redistribution requires IEEE permission. See https://www.ieee.org/publications/rights/index.html for more information.

mechanism for weighting the dynamic features and a cross-modality fusion module for blending spatial and frequency features. These components collectively enable SFANet to achieve superior performance in deepfake detection, which is crucial for protecting user privacy and security in the consumer electronics space. Overall, the primary contributions of this work are outlined as follows:

- An end-to-end detection framework termed SFANet that integrates spatial and frequency-domain features is proposed for deepfake detection.
- A feature decomposition based on Haar wavelet transform is introduced to enhance the model's capability in capturing fine-grained details and global information.
- A dual-attention mechanism and a cross-modality fusion module are built and incorporated to adapt feature weights and integrate spatial and frequency domains.

The rest of the paper is structured as follows: Section II presents the related work. Section III illustrates the proposed method in detail. Section IV analyzes the experimental results. The paper is concluded in Section V.

II. Related Work

A. Deepfake in Consumer Electronics

With the advancements in deepfake technology, its application in the consumer electronics field has become increasingly widespread [11]. This technology enables the digital resurrection of iconic characters through 3D modeling and facial recreation, as exemplified by the recreation of Bruce Willis using digital techniques [12]. Moreover, personalized virtual avatars facilitate the generation of digital personas, with applications like FakeApp [13] illustrating their practical use. The charity "Malaria No More" used a deepfake video of David Beckham to amplify their message [14].

However, deepfake technology also poses threats to privacy and identity security in consumer electronics. Reports in Indonesia's banking sector show that deepfakes can bypass Know Your Customer (KYC) procedures, allowing fraudulent access to accounts [15]. Additionally, the misuse of personal images in fake adult content has led to significant privacy violations, as seen in the Taylor Swift and Gal Gadot cases [16]. Deepfake technology has also exposed vulnerabilities in biometric systems: low-quality deepfake data has been shown to deceive certain facial recognition systems [2]. These challenges emphasize the critical need for effective deepfake detection systems. As deepfake technology becomes more advanced and accessible, detecting synthetic content accurately and efficiently is crucial to safeguarding privacy, security, and trust in consumer electronics.

B. Deepfake Detection

Deepfake detection has evolved into a critical research field as synthetic media generation tools become more accessible. Existing detection methods leverage different aspects of the content, primarily focusing on spatial [17], [18], [19], [20], [21], [22], [23], [24], [25], frequency [4], [5], [6], or hybrid domains [26], [27], [28], [29].

1) Deepfake Detection in Spatial Domain: Spatial domain methods focus on detecting visual artifacts and inconsistencies introduced during the deepfake generation. Zhou et al. [20] proposed a two-stream framework that integrates the feature extraction capabilities of GoogleNet with a specialized three-path network. This framework focuses on local noise in images and tampering artifacts. Li et al. [22] proposed the Face X-ray to analyze edge inconsistencies for detecting blending artifacts. Hu et al. [21] proposed a two-stream convolutional network approach to detect tampered frames and temporal inconsistencies for identifying compressed forged videos. Cao et al. [23] leveraged real-sample-based learned features to pinpoint variations in image reconstruction. Liao et al. [25] constructed facial muscle motion features using continuous facial landmarks to counteract the artifacts generated by deepfake propagation. Ba et al. [24] focused on detecting inconsistencies in individual image regions and merged localized representation details across several non-overlapping zones. Despite their success, spatial domain methods struggle with high-quality forgeries, especially those involving subtle and imperceptible manipulations.

2) Deepfake Detection in Frequency Domain: Frequency domain techniques, such as those based on Fourier transforms [4], [5], are widely used in deepfake detection. Miao et al. [6] utilized multilevel frequency artifacts to derive frequency-based forgery features for facial detection. Tan et al. [5] focused on the high-frequency components of an image and combined them with a frequency-domain learning module to extract source-independent features. By operating in the frequency domain, these methods capture global structural characteristics often missed by spatial domain approaches. However, directly substituting spatial domain features with frequency domain features can lead to a loss of essential spatial information.

3) Deepfake Detection in Hybrid Spatial-Frequency Domain: Researchers have explored hybrid spatial-frequency methods to overcome the limitations of single-domain approaches. These methods exploit the complementary strengths of both domains to improve detection accuracy. For example, Tian et al. [27] introduced a channel attention module and a spatial-frequency feature fusion module to improve feature discrimination and maintain performance across datasets. Wang et al. [28] proposed dynamic graph learning using relational perceptual features in the spatial and frequency domains for deepfake detection. Wang et al. [29] introduced the integration of spatial and frequency domain information within a knowledge refinement framework to achieve efficient forgery detection. Chen et al. [30] devised a multi-domain probability estimation method to capture the most discrepant region information for robust deepfake detection. Given their promising performance, existing hybrid methods fail to fully harness the multi-resolution and localized potential of frequency-domain features.

Building on these strengths and limitations, this paper introduces a wavelet-based Spatial and Frequency Domain Attention Network (SFANet) for deepfake detection. SFANet incorporates a fine-grained frequency-domain decoupling strategy through a Haar wavelet transform. This approach enables

the decomposition of spatial features into multi-resolution frequency components, and it can capture both local details and global structures. In this work, we employ a wavelet transform feature decomposer to decompose image features into high-frequency and low-frequency components. Forgery-related artifacts are primarily captured in the high-frequency sub-bands, whereas global structural information is preserved in the low-frequency sub-bands. A more comprehensive analysis of image fidelity by combining frequency and spatial domain features.

III. The Proposed Method

A. Overall Framework

The framework of SFANet is depicted in Figure 1 (a). It follows an end-to-end architecture.

The image undergoes initial processing via a spatial feature extractor initialized with Xception [31] parameters. Adhering to the aggregation-and-decoupling strategy outlined in prior research [32], the three feature layers are subsequently concatenated and transformed using wavelet decomposition.

For an input image $I \in \mathbb{R}^{3\times H\times W}$ (with 3 channels for RGB) is passed through the first convolutional layer, where H and W represent the height and width of the image. This first layer will learn $C = 32$ different feature maps (channels), which means it will apply 32 different filters to the input image, producing $I_1 \in \mathbb{R}^{C\times H\times W}$. After this, subsequent layers perform downsampling and increase the number of channels, leading to: $I_2 \in \mathbb{R}^{2C\times(H/2)\times(W/2)}$, $I_3 \in \mathbb{R}^{4C\times(H/4)\times(W/4)}$, $I_4 \in \mathbb{R}^{8C\times(H/8)\times(W/8)}$. The three features are combined through interpolation and convolution. It is represented as:

$$I' = \mathrm{Cat}(\delta_{1\times1}(\varphi(I_2)), \delta_{1\times1}(\varphi(I_3)), \delta_{1\times1}(\varphi(I_4))), \tag{1}$$

where $\varphi(\cdot)$ is the interpolation operation and $\delta_{1\times1}(\cdot)$ denotes 1×1 convolution operation. $\mathrm{Cat}(\cdot)$ denotes the concatenation operation.

This fused representation I' subsequently undergoes frequency-domain analysis via the Wavelet Transform Feature Decomposer (WTFD) Block. The WTFD separates I' into high and low-frequency components:

$$F_{\mathrm{H}}, F_{\mathrm{L}} = f_{\mathrm{wt}}(I'), \tag{2}$$

where $f_{\mathrm{wt}}(\cdot)$ represents the WTFD operation for feature mapping. F_{H} and F_{L} correspond to the mapped high-frequency and low-frequency features with dimensions $8C \times (H/16) \times (W/16)$, respectively. Based on the mapped low-frequency and high-frequency features, the adaptive fusion process is defined as:

$$F_{\mathrm{DA}} = \sigma(\phi_{1\times1}(f_{\mathrm{da}}(F_{\mathrm{H}}) + f_{\mathrm{da}}(F_{\mathrm{L}}))), \tag{3}$$

where $\phi_{1\times1}(\cdot)$ represents the depthwise separable convolution with a kernel size of 1×1. $f_{\mathrm{da}}(\cdot)$ denotes Dual Attention (DA) block operation. $\sigma(\cdot)$ indicates the ReLU activation function.

The output features F_{DA} are fused with the previous spatial feature I_4. The fusion operation is carried out using CMF, and its mathematical expression is formulated as follows:

$$F_{\mathrm{final}} = f_{\mathrm{cmf}}(F_{\mathrm{DA}}, I_4). \tag{4}$$

The fused features will be passed through two different paths. The difference between the reconstructed and input images in the decoding path guides classification via reconstruction loss. The second path passes the fused features to Xception blocks for face real/fake classification.

B. Wavelet Transform Feature Decomposer

The Wavelet Transform Feature Decomposer (WTFD) module is designed to incorporate frequency domain information into the deepfake detection model. As shown in Figure 1 (b), the module applies the Haar wavelet transform and convolution operations to decompose spatial features into four frequency components: low-frequency and three high-frequency components representing horizontal, vertical, and diagonal high-frequency details. This decomposition helps the model capture richer feature information. It is crucial for distinguishing deepfakes, as fake images often exhibit distinct frequency patterns compared to real ones.

The low-frequency component undergoes feature learning through convolution to extract low-frequency features. The three high-frequency components are concatenated into a single high-frequency signal and undergo nonlinear operations for feature mapping. During this process, the channel dimension is reduced to eliminate redundant information, which produces more refined high-frequency features. This approach utilizes the efficient decomposition of the Haar wavelet transform to introduce frequency domain information. It enables the network to achieve a comprehensive feature representation. This method enhances the ability of the network to detect deepfakes.

Specifically, a pointwise convolution operation is first applied to the input data I' to enhance feature nonlinearity and to obtain new features with a constant dimension $I_{\mathrm{wt}} \in \mathbb{R}^{C\times H\times W}$. Then, the Haar wavelet transform is used to transform the features into four components. For each channel $I_{\mathrm{c}} \in \mathbb{R}^{C\times H\times W}$, the first-order Haar wavelet transform is computed as follows:

$$\begin{cases} L_{\mathrm{c}}(i,j) = \frac{I_{\mathrm{c}}(i,2j-1)+I_{\mathrm{c}}(i,2j)}{2}, \\ H_{\mathrm{c}}(i,j) = I_{\mathrm{c}}(2i-1,j) - I_{\mathrm{c}}(2i,j), \end{cases} \tag{5}$$

where $L_{\mathrm{c}}(i,j)$ denotes the low-frequency approximation coefficients of channel c and $H_{\mathrm{c}}(i,j)$ denotes the high-frequency detail coefficients of channel c. i is the row index and j is the column index.

Then, the following Haar wavelet transform is applied to each column of the approximation coefficients and detail coefficients:

$$\begin{cases} A_{\mathrm{c}} = LL_{\mathrm{c}}(i,j) = \frac{L_{\mathrm{c}}(i,2j-1)+L_{\mathrm{c}}(i,2j)}{2}, \\ H_{\mathrm{c}} = LH_{\mathrm{c}}(i,j) = \frac{H_{\mathrm{c}}(i,2j-1)-H_{\mathrm{c}}(i,2j)}{2}, \\ V_{\mathrm{c}} = HL_{\mathrm{c}}(i,j) = L_{\mathrm{c}}(i,2j-1) - L_{\mathrm{c}}(i,2j), \\ D_{c} = HH_{\mathrm{c}}(i,j) = H_{\mathrm{c}}(i,2j-1) - H_{\mathrm{c}}(i,2j), \end{cases} \tag{6}$$

where A_{c} represents the approximation coefficients for a single channel, H_{c} represents the horizontal detail coefficients for a

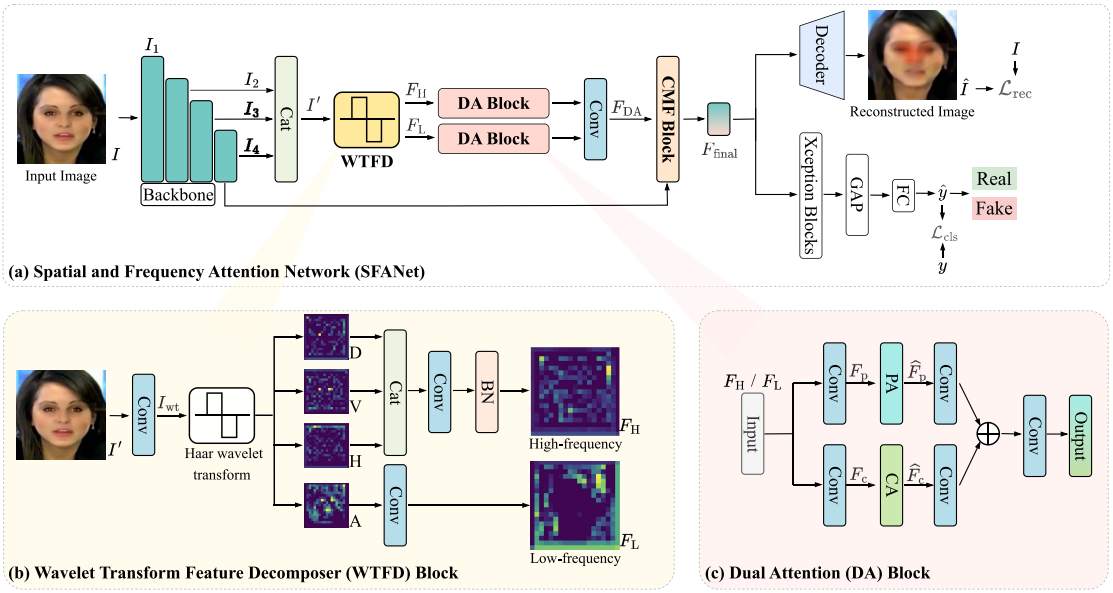

Fig. 1. Illustration of SFANet for deepfake detection.

single channel, V_c represents the vertical detail coefficients for a single channel, and D_c represents the diagonal detail coefficients for a single channel. i ranges from 1 to $H/2$ and j ranging from 1 to $W/2$.

Finally, the three high-frequency components are combined, and then the point-convolution low-dimensional mapping is adopted to obtain the final high-frequency and low-frequency features:

$$F_{\mathrm{H}}, F_{\mathrm{L}} = (\mathrm{BN}(\delta_{1\times1}(A)), \psi(\delta_{1\times1}(\mathrm{Cat}(H, V, D)))), \tag{7}$$

where F_{H} and F_{L} represent high-frequency and low-frequency features with dimensions $(C, H/2, W/2)$. $\mathrm{BN}(\cdot)$ denotes the batch normalization computation.

C. Dual Attention Block

The architecture of the Dual Attention (DA) block is presented in Figure 1 (c). The DA comprises two independent yet complementary attention mechanisms, namely the Position Attention (PA) module and the Channel Attention (CA) module. These modules act on the spatial and channel dimensions of the feature map, respectively. Traditional attention block usually globally computes the dependencies between all positions or channels. However, in the DA block, a local convolutional layer is added before the attention computation, which contributes to reducing the computational complexity. In PA and CA, the method of computing the attention weights is more precise. Similarity-based feature weighting is used instead of the simple dot product or summation. This approach enhances the discriminative power of pixel-level feature maps. The combined effect of PA and CA allows the model to capture both spatial dependencies and channel relationships for a comprehensive analysis of image features.

1) Position Attention Module: The PA is aimed at modeling spatial relationships between various locations within a feature map. The architecture of PA is presented in Figure 2 (a). The

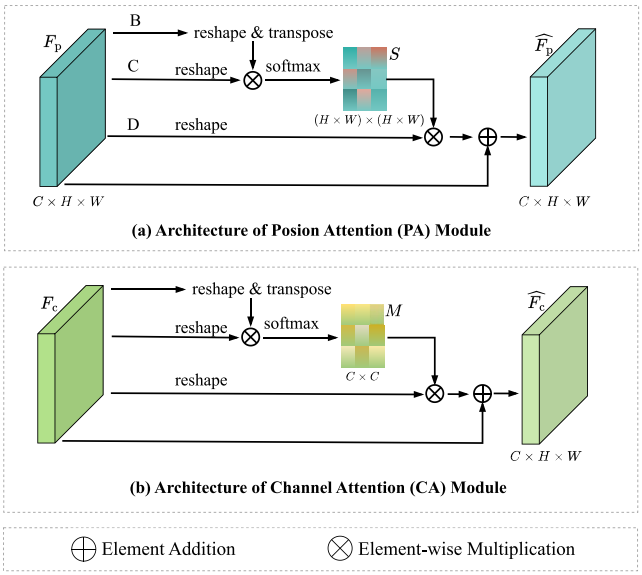

Fig. 2. Illustration of the Position Attention (PA) module and the Channel Attention (CA) module.

dimensions of the input feature map $F_{\mathrm{p}} \in \mathbb{R}^{C\times H\times W}$, where C indicates the channel count, H denotes the height, and W represents the width. Three feature maps B, C, D are generated from F_{p} through convolution operations. B and C are reshaped into $C \times V$, where $V = H \times W$, to enable matrix operations. The attention map S_{ji} is computed using a similarity function:

$$S_{ji} = \frac{\exp(B_i \cdot C_j)}{\sum_{i=1}^{V} \exp(B_i \cdot C_j)}. \tag{8}$$

This equation quantifies the influence of position i on position j.

The feature map D is reshaped and weighted by the attention map S:

$$\widehat{F}_{\mathrm{p}j} = \alpha \sum_{i=1}^{V} \left(S_{ji} D_i\right) + b_j, \tag{9}$$

where α is a learnable scaling parameter, and b_j is a bias term. The resulting feature map $\widehat{F}_{\mathrm{p}}$ captures global contextual features across all spatial positions, and thus it can enhance spatial feature representation.

2) Channel Attention Module: The CA module focuses on capturing relationships between channels to adjust their weights dynamically. The architecture of the CA module is presented in Figure 2 (b). This allows the model to emphasize more informative channels while suppressing irrelevant ones. The input feature map F_{c} has dimensions $C \times H \times W$. The feature map F_{c} is reshaped into $C \times V$, where $V = H \times W$.

The attention map M_{ji} is calculated based on the similarity between channels:

$$M_{ji} = \frac{\exp\left(F_{\mathrm{c}i} \cdot F_{\mathrm{c}j}\right)}{\sum_{i=1}^{C} \exp\left(F_{\mathrm{c}i} \cdot F_{\mathrm{c}j}\right)}. \tag{10}$$

This equation quantifies the influence of channel i on channel j.

Using the attention map M_{ji}, the feature map is updated as follows:

$$\widehat{F}_{\mathrm{c}j} = \beta \sum_{i=1}^{C} \left(M_{ji} F_{\mathrm{c}i}\right) + b_j, \tag{11}$$

where β is a learnable scaling parameter and b_j is a bias term.

3) Dual Attention Module: The Dual Attention block integrates the outputs of the PA and CA modules to refine spatial and channel features:

$$\begin{cases} \widehat{F}_{\mathrm{p}} = \delta_{1\times1}\left(f_{\mathrm{pa}}(F_{\mathrm{p}})\right), \\ \widehat{F}_{\mathrm{c}} = \delta_{1\times1}(f_{\mathrm{ca}}(F_{\mathrm{c}})), \end{cases} \tag{12}$$

where $f_{\mathrm{pa}}(\cdot)$ denotes PA module operation, and $f_{\mathrm{ca}}(\cdot)$ indicates CA module operation.

Once processed, the outputs from PA and CA are combined to enhance the feature representation:

$$F_{\mathrm{DA}} = \sigma\left(\phi_{1\times1}(\widehat{F}_p + \widehat{F}_c)\right). \tag{13}$$

This aggregated feature map, F_{DA}, captures dependencies across spatial and channel dimensions.

D. Cross Modality Fusion

This work introduces a Cross-Modality Fusion (CMF) module to integrate features extracted from both spatial and frequency domains. This fusion mechanism is critical for leveraging the complementary strengths of these two domains.

The process begins with embedding spatial features (I_4) and frequency features (F_{DA}) into a unified representation space. This is achieved by transforming these features into query (Q), key (K), and value (V) representations using learnable parameter matrices:

$$Q_{\mathrm{S}} = W_{\mathrm{qs}} I_4, \quad K_{\mathrm{F}} = W_{\mathrm{kf}} F_{\mathrm{DA}}, \quad V_{\mathrm{F}} = W_{\mathrm{vf}} F_{\mathrm{DA}}, \tag{14}$$

where W_{qs}, W_{kf}, W_{vf} are weight matrices trained during the learning process. These transformations prepare the features for effective interaction.

The attention mechanism then computes the relevance of frequency features to spatial features and refines the frequency representation. This step can be represented as:

$$F_{\mathrm{re}} = \mathrm{softmax}\left(\frac{Q_S K_F^{\mathrm{T}}}{\sqrt{d}}\right) V_{\mathrm{F}}, \tag{15}$$

where d represents the dimensionality of the embedding space, acting as a scaling factor to stabilize the gradient during training. F_{re} is the refined frequency feature representation aligned with the spatial features.

Next, the refined frequency features are fused with the original spatial features using a residual connection to preserve spatial details. A convolution operation further refines the fused features, enhancing their expressiveness. This step is represented as:

$$F_{\mathrm{final}} = \mathrm{Conv}_{3\times3}(F_{\mathrm{S}} + F_{\mathrm{re}}). \tag{16}$$

The output F_{final} represents the unified feature set that integrates localized spatial details and global frequency characteristics. This combined representation captures fine-grained artifacts and broader structural inconsistencies.

The CMF module ensures a dynamic and adaptive fusion of spatial and frequency information, making it robust to variations in input quality and manipulation techniques. This dynamic interaction between modalities is key to enhancing the accuracy and robustness of deepfake detection systems.

E. Loss Function

In this work, we employ a dual-objective loss function combining the reconstruction loss from the RECCE [23] architecture and the cross-entropy loss for classification.

The reconstruction loss minimizes the pixel-wise difference between the original input I_i and the reconstructed output $\hat{I}_i$:

$$\mathcal{L}_{\mathrm{rec}} = \frac{1}{N} \sum_{i=1}^{N} \|I_i - \hat{I}_i\|_2^2, \tag{17}$$

where N denotes the total number of samples.

Cross-entropy loss distinguishes between real and fake inputs for the binary classification task. For each sample i, given the ground truth label $y_i \in \{0, 1\}$ and the predicted probability $\hat{y}_i$, the loss is defined as:

$$\mathcal{L}_{\mathrm{cls}} = -\frac{1}{N} \sum_{i=1}^{N} \left[y_i \log\left(\hat{y}_i\right) + (1 - y_i) \log\left(1 - \hat{y}_i\right)\right]. \tag{18}$$

This term ensures the model maximizes its classification accuracy by minimizing the discrepancy between predicted and true labels. The overall training objective is a weighted combination of the reconstruction loss and the cross-entropy loss. It is formulated as:

$$\mathcal{L}_{\mathrm{total}} = \lambda_{\mathrm{rec}} \mathcal{L}_{\mathrm{rec}} + \lambda_{\mathrm{cls}} \mathcal{L}_{\mathrm{cls}}, \tag{19}$$

where the weighting factors λ_{rec} and λ_{cls} are set to 0.1 and 1, respectively. These coefficients are tuned to achieve a balance between reconstruction and classification accuracy.

TABLE I
IMPLEMENTATION DETAILS OF THE PROPOSED FRAMEWORK

Component	Details
GPUs	2 × 3090 Ti
Framework	PyTorch
Base Network	Xception [31]
Batch Size	32
Epochs	40
Initial Learning Rate	2e-4
Learning Rate Scheduler	Step-learning rate scheduler
Optimizer	Adam [33]
Weight Decay	1e-5
Data Augmentation	Random horizontal flipping

TABLE II
COMPOSITIONS OF FF++, CELEB-DF V2 AND WILDDEEPFAKE DATASETS

Dataset	Real		Forged	
	Video	Frame	Video	Frame
FF++ [34]	1,000	509.9k	4,000	1,830.1k
Celeb-DF V2 [35]	590	225.4k	5,639	2,116.8k
WildDeepfake [36]	3,805	440.5k	3,509	739.6k

IV. EXPERIMENTS AND DISCUSSION

A. Implementation Details

The detailed implementation settings of the proposed model are summarized in Table I. It includes information about the base network, training configuration, optimizer settings, data augmentation strategy, and hardware specifications. To ensure a fair comparison, we employed a consistent hyperparameter tuning procedure. A grid search strategy was utilized to optimize key hyperparameters. The learning rate was set to 2e-4, and the weight decay was set to 1e-5.

B. Datasets and Evaluation Metrics

Datasets. To evaluate the proposed SFANet, we conducted experiments on three widely used deepfake detection datasets: FaceForensics++ (FF++) [34], Celeb-DF V2 [35], WildDeepfake [36]. These datasets provide a diverse range of manipulated content, ensuring robust evaluation across various forgery techniques and real-world scenarios. Since the format of raw data is in video, the face image should first be extracted from the sequence and stored. The RetinaFace [37] technique was employed to extract image frames. The compositions of FF++, Celeb-DF V2, and WildDeepfake datasets are shown in Table II.

FF++ [34] is a benchmark dataset for deepfake detection. The dataset provides raw, high-quality (HQ), and low-quality (LQ) versions of the videos. It is suitable for testing models at different compression levels and video quality. The dataset includes four types of deepfake techniques, i.e., DeepFakes, Face2Face, FaceSwap, and NeuralTextures. The dataset is split into 72% for training, and 14% for validation and testing.

Celeb-DF V2 [35] is a challenging dataset designed to address visible artifacts and low-quality manipulation in earlier datasets. It contains high-quality, realistic deepfake videos, making it particularly suitable for evaluating models on advanced forgery techniques.

WildDeepfake [36] consists of deepfake videos gathered from the Internet, representing real-world deepfake scenarios. The dataset contains a variety of video qualities, backgrounds, and forgery types.

Evaluation Metrics. We evaluate model performance using three key metrics: Accuracy (ACC), Area Under the ROC Curve (AUC), and Equal Error Rate (EER). ACC measures overall classification correctness but can be misleading under class imbalance, as it prioritizes majority-class accuracy. It is computed as:

$$\mathrm{ACC} = \frac{\mathrm{tp} + \mathrm{tn}}{\mathrm{tp} + \mathrm{tn} + \mathrm{fp} + \mathrm{fn}}, \tag{20}$$

where tp is the fake sample correctly identified as fake, while tn is the real sample correctly classified as real. fp refers to real samples misclassified as fake, and fn refers to fake samples incorrectly classified as real.

AUC evaluates discrimination ability across all thresholds and is therefore robust to class distribution shifts. It is formulated as:

$$\mathrm{AUC} = \int_0^1 \mathrm{TPR}(\mathrm{FPR}) d\mathrm{FPR}, \tag{21}$$

Here, the function TPR(FPR) represents the Receiver Operating Characteristic (ROC) curve. TPR is the proportion of correctly identified fake samples among all actual fake samples. FPR is the proportion of real samples incorrectly classified as fake among all actual real samples. A higher AUC indicates better robustness and discrimination capability. EER provides a balanced measure of model performance at the threshold where false acceptance and false rejection rates are equal.

C. Comparison With State-of-the-Art Methods

In this section, we comprehensively compare SFANet with state-of-the-art (SOTA) deepfake detection methods.

Intra-testing. We conducted comprehensive experiments on the FF++ dataset under both HQ and LQ settings, and the results are shown in Table III. It demonstrates that SFANet outperforms all the competitors. Specifically, in the HQ setting, SFANet achieves an ACC of 97.52% and an AUC of 99.38%. These results are significantly higher compared to backbone methods Xception (95.73% and 96.30% in ACC and AUC) and baseline RECCE (97.06% and 99.32% in ACC and AUC). It is worth mentioning that SFANet introduces the wavelet transform to incorporate multi-resolution frequency domain information. This enables SFANet to capture subtle frequency-based artifacts that are missed by spatial domain methods. Competitive approaches such as SFIC-VGGNet19 [42] and DFF+LEA [43] achieve good results on high-quality data but degrade sharply when the input quality decreases. In contrast, SFANet maintains consistently strong detection performance. Specifically, SFANet achieves an ACC of 91.19% and an AUC of 95.25%, surpassing RECCE, which achieves 91.03% in ACC and 95.02% in AUC. It further proves the robustness of SFANet in low-quality scenarios.

The experimental results on the WildDeepfake and Celeb-DF V2 datasets are shown in Table IV. It demonstrates that our

TABLE III
OBJECTIVE RESULTS OF THE INTRA-TESTING ON THE FF++ DATASET. THE BEST RESULTS ARE HIGHLIGHTED IN BOLD

Methods	FF++ (HQ)		FF++ (LQ)	
	ACC (%)	AUC (%)	ACC (%)	AUC (%)
SPSL [38]	91.50	95.32	81.57	82.82
RFM [39]	95.69	98.79	87.06	89.83
Add-Net [36]	96.78	97.74	87.50	91.01
Xception [31]	95.73	96.30	86.86	89.30
Multi-task [40]	85.65	85.43	81.30	75.59
Two-branch [41]	96.43	98.70	86.34	86.59
SFIC-VGGNet19 [42]	93.31	97.41	89.65	94.71
DFF+LEA [43]	94.14	98.78	79.58	89.93
Freq-SCL [44]	96.69	99.28	89.00	92.39
RECCE [23]	97.06	99.32	91.03	95.02
SFANet (Ours)	**97.52**	**99.38**	**91.19**	**95.25**

TABLE IV
OBJECTIVE RESULTS OF THE INTRA-TESTING ON THE WILDDEEPFAKE AND CELEB-DF V2 DATASETS. THE BEST RESULTS ARE HIGHLIGHTED IN BOLD

Methods	WildDeepfake		Celeb-DF V2	
	ACC (%)	AUC (%)	ACC (%)	AUC (%)
RFM [39]	77.38	83.92	97.96	**99.94**
Xception [31]	77.25	86.76	97.90	99.73
Add-Net [36]	76.25	86.17	96.93	99.55
MultiAtt [45]	82.86	90.71	97.92	**99.94**
RECCE [23]	84.26	91.54	98.59	**99.94**
SFDG-Xception [28]	83.36	**92.15**	**98.95**	**99.94**
SFANet (Ours)	**84.57**	91.78	98.82	**99.94**

proposed SFANet achieves SOTA performance overall. On the more challenging WildDeepfake dataset, SFANet outperforms all benchmark methods, including SFDG-Xception [28]. The highest accuracy of 84.57% proves its superiority in complex real-world scenarios. While its AUC (91.78%) is slightly behind SFDG-Xception's (92.15%), its lead in accuracy is more pronounced. Moreover, on the Celeb-DF V2 dataset, SFANet achieved the second-highest accuracy of 98.82% and a state-of-the-art AUC of 99.94%, matching the top score reported. These results further emphasize SFANet's capability to deliver SOTA performance across diverse datasets.

Cross-testing. To evaluate the generalization ability of the proposed method to unseen forgery types, we performed cross-testing. The model was trained on the low-quality FF++ dataset and then tested directly on the WildDeepfake and Celeb-DF datasets. The experimental results are shown in Table V. It shows that SFANet establishes a strong competitive edge against the SOTA method, DFF+LEA [43], and showcases unique advantages on key generalization metrics. Specifically, on the more challenging WildDeepfake dataset, while DFF+LEA leads in AUC, the proposed SFANet achieves the best EER of 38.67% among all methods. The lower the EER, the better the trade-off between false acceptance and false rejection rates.

TABLE V
OBJECTIVE RESULT OF CROSS-TESTING ON THE WILDDEEPFAKE AND CELEB-DF V2 DATASETS. "↓" MEANS THE LOWER THE BETTER, AND "↑" MEANS THE HIGHER THE BETTER. THE BEST RESULTS ARE HIGHLIGHTED IN BOLD

Methods	WildDeepfake		Celeb-DF	
	AUC (%)↑	EER (%)↓	AUC (%)↑	EER (%)↓
Xception [31]	62.72	40.65	61.80	41.73
RFM [39]	57.75	45.45	65.63	38.54
Add-Net [36]	62.35	41.42	65.29	38.90
F^3-Net [4]	57.10	45.12	61.51	42.03
MultiAtt [45]	59.74	43.73	67.02	37.90
RECCE [23]	64.31	40.53	68.71	35.73
SFIC-VGGNet19 [42]	-	-	67.15	-
DFF+LEA [43]	**73.03**	-	69.84	-
SFANet (Ours)	67.49	**38.67**	**69.89**	**35.02**

TABLE VI
RESULTS OF SFANET WITH INDIVIDUAL COMPONENTS REMOVED. "W/O" REFERS TO "WITHOUT." THE BEST RESULTS ARE HIGHLIGHTED IN BOLD

Methods	FF++ (HQ)		FF++ (LQ)	
	ACC (%)	AUC (%)	ACC (%)	AUC (%)
SFANet w/o WTFD-L	97.21	99.20	90.88	95.02
SFANet w/o WTFD-H	97.12	99.15	90.74	94.88
SFANet w/o DA Block	97.09	99.18	90.80	94.95
SFANet w/o CMF + Cat	97.28	99.25	91.02	95.10
SFANet w/o CMF + Add	97.19	99.22	90.92	95.04
SFANet (Ours)	**97.52**	**99.38**	**91.19**	**95.25**

On the Celeb-DF dataset, the generalization advantage of SFANet is more obvious. In both key metrics, SFANet achieved the highest AUC (69.89%) and the best EER (35.02/%), outperforming all competitors. This generalization ability is benefited from the combination of frequency-domain features, which are less dependent on specific forgeries than spatial-domain features. This advantage is necessary for consumer electronics applications where devices must remain secure against new methods of counterfeiting.

D. Ablation Study

Effectiveness of components. We systematically removed key components of the model to evaluate their contributions to overall performance. The ablation results are summarized in Table VI. Specifically, removing the low-frequency features (WTFD-L) and high-frequency features (WTFD-H) extracted by the wavelet transform resulted in performance degradation. This highlights the critical role of multi-resolution features in improving the model's effectiveness. Similarly, excluding the DA block weakened the model's ability to select and focus on frequency features. This led to a decline in performance and underscored its importance in feature modeling. Moreover, the CMF module is designed to enhance the ability to capture intricate multi-domain relationships through the fusion of spatial and frequency domains. Ablation studies demonstrate that performance degrades to varying degrees when the CMF module is removed. This confirms

TABLE VII
OBJECTIVE RESULTS OF FINE-GRAINED ABLATION EXPERIMENTS ON FOUR FORGERY METHODS ON THE FF++ DATASET. THE EVALUATION METRIC IS AUC (%). "W/O" REFERS TO "WITHOUT." THE BEST RESULTS ARE HIGHLIGHTED IN **BOLD**

Methods	DeepFakes	FaceSwap	Face2Face	NeuralTextures
Variant (a) w/o F_{DA}	98.17	97.54	95.87	91.56
Variant (b) w/o I_4	97.60	97.01	95.12	91.48
SFANet (Ours)	**98.97**	**98.20**	**96.77**	**92.32**

TABLE VIII
EFFECTIVENESS OF THE PROPOSED CONSTRAINTS IN THE PROPOSED METHOD ON THE WILDDEEPFAKE DATASET [36]

ID	$\mathcal{L}_{\mathrm{rec}}$	$\mathcal{L}_{\mathrm{cls}}$	ACC (%)	AUC (%)
Variant (a)	–	✓	83.25	90.54
Variant (b)	✓	–	81.78	89.66
SFANet (Ours)	✓	✓	**84.57**	**91.78**

that the CMF module is essential for effectively integrating these complementary features. The complete model (SFANet) performed best across all comparisons. This demonstrates that the collaborative integration of all modules plays a crucial role in enhancing the overall model performance.

To evaluate the impact of frequency domain feature F_{DA} and spatial domain feature I_4 for four forgery methods, we conducted ablation experiments on the FF++ HQ dataset. Two variants of SFANet were evaluated: Variant (a) excludes the frequency domain feature F_{DA}, and Variant (b) omits the spatial feature w/o I_4. The experimental results are summarized in Table VII. It shows that the performance degrades when either F_{DA} or I_4 is removed. Specifically, the performance decreases with an average decrease of 0.78% in AUC across the four forgery methods when the F_{DA} features are removed. The decline is even more pronounced when spatial features I_4 are omitted. These findings highlight the critical role of frequency and spatial domain features in enhancing the performance of models to detect different forgery methods.

Effectiveness of constraints. To investigate the effectiveness of the constraints used in SFANet, we designed two variants of our method: (a) our method without the reconstruction loss $\mathcal{L}_{\mathrm{rec}}$ in Equation (17), and (b) our method without the cross-entropy classification loss $\mathcal{L}_{\mathrm{cls}}$ in Equation (18). The results are shown in Table VIII. It shows that removing the reconstruction loss (Variant a) decreases the AUC by 1.24%, while excluding the cross-entropy classification loss (Variant b) reduces the AUC by 2.12%. This demonstrates that the reconstruction loss and the cross-entropy classification loss are effective in constraining the model.

E. Computational Complexity

In this section, we analyze the computational complexity of the proposed SFANet model and compare it to the baseline model RECCE [23] in terms of two key metrics: Parameters and FLOPs. The comparison is based on an image with a size of 299 × 299. The results are summarized in Table IX. It shows that SFANet requires fewer parameters and FLOPs compared to the RECCE model. Specifically, SFANet has 21.80 million parameters, which is 8.3% fewer than RECCE. This reduction can be attributed to the optimization techniques implemented in SFANet where the modules of multi-scale graph reasoning and reconstruction-guided attention are replaced by wavelet transform and dual attention block. Meanwhile, SFANet requires 10.01G FLOPs, which reduces by 11.7% compared to RECCE. The GPU Memory indicates the amount of GPU memory required during training. Runtime refers to the time required for the model to process a single input image during inference. The duration depends on factors such as the model's complexity and the hardware used. It shows that SFANet requires 9.34 GB of GPU memory which is marginally lower than RECCE (9.88 GB). Meanwhile, SFANet achieves a runtime of 63 ms, which is faster than RECCE (115 ms). Less resource consumption facilitates integration into consumer electronics products, and fast inference times ensure real-time deepfake detection.

TABLE IX
COMPARISON OF MODEL PARAMETERS, FLOPS, RUNTIME, AND GPU MEMORY USAGE BETWEEN BASELINE MODEL (RECCE) AND SFANET (OURS)

Metric	Unit	Model	
		RECCE [23]	SFANet (Ours)
Image Size	pixels	299^2	299^2
Parameters	(M) ↓	23.78	**21.80**
FLOPs	(G) ↓	11.34	**10.01**
GPU Memory	(GB) ↓	9.88	**9.34**
Runtime	(ms) ↓	115	**63**

F. Visualization and Analysis

We present a comparative visualization of real and fake images using the Haar wavelet transform to decouple frequency-domain features. Additionally, we visualize the outputs of the frequency-decoupling module, specifically the low-frequency component F_{L} and the high-frequency component F_{H}. Considering the generalized rows of the analytical SFANet, the forged image involves two different forging modes, *i.e.*, Deepfakes and Face2Face. The results are depicted in Figure 3 (a). The first two rows represent the real image and the image of the Deepfakes forgery technique, respectively. The low-frequency domain features of the real image show continuity and consistency, while the facial features of the fake image show missing. The third and fourth rows show the comparison of the real image with the Face2Face forgery technique, where the forged image has an irregular representation in the frequency domain.

Meanwhile, the attention maps from spatial and hybrid spatial-frequency domains are shown in Figure 3 (b). It can be seen that the spatial domain attention maps cover broader areas but lack precise localization. In contrast, hybrid attention maps capture both global and local features. They emphasize boundaries and high-frequency details unique to forgeries. The results prove that integrating frequency-domain information enhances detection accuracy and robustness against diverse forgery techniques.

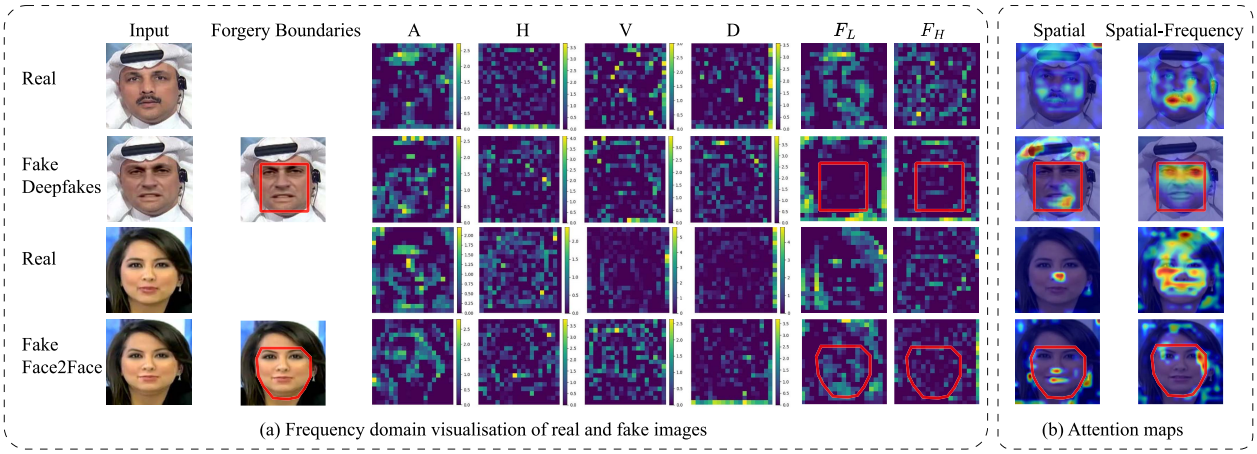

Fig. 3. Illustration of the visual comparison between real and fake images. These components represent the Low Frequency (A), Horizontal High Frequency (H), Vertical High Frequency (V), and Diagonal High Frequency (D) of the images, extracted using Haar wavelet transform. The red box indicates the forgery boundaries of the Deepfake and Face2Face forgery techniques.

V. Conclusion

This study introduces an advanced end-to-end framework, termed SFANet, for deepfake detection. By integrating information from spatial and frequency domains, SFANet harnesses the complementary strengths of these domains to enhance detection performance. The inclusion of the Haar wavelet transform decomposer separates spatial features into high- and low-frequency components. Furthermore, the dual-attention mechanism and cross-modal fusion module facilitate dynamic adjustment of feature weights. This enables SFANet to combine spatial and frequency-domain information. Experimental results prove that SFANet achieves superior detection performance compared to SOTA methods. These results highlight the feasibility of SFANet as a powerful tool to ensure the integrity of digital content in an era of ubiquitous AI technology. SFANet secures biometric authentication on consumer devices like smartphones and IoT against deepfake threats.

References

[1] G. Zhang, M. Gao, Q. Li, S. Guo, and G. Jeon, "Detecting sequential deepfake manipulation via spectral transformer with pyramid attention in consumer IoT," *IEEE Trans. Consum. Electron.*, vol. 71, no. 2, pp. 6371–6380, May 2025.

[2] Z. Jin, Y. Zeng, T. Liu, X. Liu, B. Leng, and X. Zhou, "Protecting consumer electronics human-computer interactive verification security via anomaly-aware reconstruction-guided forgery localization," *IEEE Trans. Consum. Electron.*, vol. 71, no. 2, pp. 6307–6817, May 2025.

[3] S. Guo, Q. Li, M. Gao, X. Zhu, and I. Rida, "Generalizable deepfake detection via spatial kernel selection and halo attention network," *Image Vis. Comput.*, vol. 160, Jul. 2025, Art. no. 105582.

[4] Y. Qian, G. Yin, L. Sheng, Z. Chen, and J. Shao, "Thinking in frequency: Face forgery detection by mining frequency-aware clues," in *Proc. Eur. Conf. Comput. Vis.*, 2020, pp. 86–103.

[5] C. Tan, Y. Zhao, S. Wei, G. Gu, P. Liu, and Y. Wei, "Frequency-aware deepfake detection: Improving generalizability through frequency space domain learning," in *Proc. AAAI Conf. Artif. Intell.*, 2024, pp. 5052–5060.

[6] C. Miao, Z. Tan, Q. Chu, N. Yu, and G. Guo, "Hierarchical frequency-assisted interactive networks for face manipulation detection," *IEEE Trans. Inf. Forensics Security*, vol. 17, pp. 3008–3021, 2022.

[7] C. Hu, F. Yang, X. Xing, H. Liu, T. Xiang, and H. Xia, "Two robust perceptual image hashing schemes based on discrete wavelet transform," *IEEE Trans. Consum. Electron.*, vol. 70, no. 4, pp. 6533–6546, Nov. 2024.

[8] S. Kim, W. Kang, E. Lee, and J. Paik, "Vaguelette-wavelet decomposition for frequency adaptive image restoration using directional wavelet bases," *IEEE Trans. Consum. Electron.*, vol. 57, no. 1, pp. 218–223, Feb. 2011.

[9] M. Jian et al., "Saliency detection based on directional patches extraction and principal local color contrast," *J. Vis. Commun. Image Represent.*, vol. 57, pp. 1–11, Nov. 2018.

[10] X. Xie, X. Li, L. Xu, W. Ning, and Y. Huang, "Haarae: An unsupervised anomaly detection model for IoT devices based on haar wavelet transform," *Appl. Intell.*, vol. 53, no. 15, pp. 18125–18137, Jan. 2023.

[11] H. Wang et al., "A survey on the metaverse: The state-of-the-art, technologies, applications, and challenges," *IEEE Internet Things J.*, vol. 10, no. 16, pp. 14671–14688, Aug. 2023.

[12] Z. Zehra et al., "Aesthetics of deepfake–sphere of art and entertainment industry," *Facta Univ.*, vol. 9, no. 2, pp. 87–100, 2023.

[13] P. Wu, D. Liu, J. Wang, B. Yuan, and W. Kuang, "Detection of fake IoT app based on multidimensional similarity," *IEEE Internet Things J.*, vol. 7, no. 8, pp. 7021–7031, Aug. 2020.

[14] D. Agarwal and S. Nath, "What's real and what's fake: A study on the use of deepfake technology in advertising," in *Sustainable Excellence: A Contemporary Business Perspective*. New Delhi, India: Excel India Publ., Jan. 2023, p. 183.

[15] I. J. Gunawan and S. Janisriwati, "Legal analysis on the use of deepfake technology: Threats to Indonesian banking institutions," *Law Justice*, vol. 8, no. 2, pp. 192–210, Jan. 2024.

[16] B. S. Situmeang, I. Y. Silitonga, R. F. Silaen, T. H. Siringoringo, and E. E. Sipayung, "Pengaruh artificial intelligence terhadap tingkat kasus deep fake pada selebritas di twitter," *Device*, vol. 14, no. 1, pp. 80–91, May 2024.

[17] Q. Li, M. Gao, G. Zhang, W. Zhai, J. Chen, and G. Jeon, "Towards multimodal disinformation detection by vision-language knowledge interaction," *Inf. Fusion*, vol. 102, Feb. 2024, Art. no. 102037.

[18] S. Guo, Q. Li, M. Gao, G. Zhang, J. Pan, and G. Jeon, "Deep learning-based face forgery detection for facial payment systems," *IEEE Consum. Electron. Mag.*, vol. 14, no. 3, pp. 80–86, May 2025.

[19] S. Guo, M. Gao, Q. Li, G. Jeon, and D. Camacho, "Deepfake detection via a progressive attention network," in *Proc. Int. Jt. Conf. Neural Netw.*, 2024, pp. 1–6.

[20] P. Zhou, X. Han, V. I. Morariu, and L. S. Davis, "Two-stream neural networks for tampered face detection," in *Proc. IEEE Conf. Comput. Vis. Pattern Recognit. Workshops*, 2017, pp. 1831–1839.

[21] J. Hu, X. Liao, W. Wang, and Z. Qin, "Detecting compressed deepfake videos in social networks using frame-temporality two-stream convolutional network," *IEEE Trans. Circuits Syst. Video Technol.*, vol. 32, no. 3, pp. 1089–1102, Mar. 2022.

[22] L. Li et al., "Face x-ray for more general face forgery detection," in *Proc. IEEE Conf. Comput. Vis. Pattern Recognit.*, 2020, pp. 5001–5010.

[23] J. Cao, C. Ma, T. Yao, S. Chen, S. Ding, and X. Yang, "End-to-end reconstruction-classification learning for face forgery detection," in *Proc. IEEE Conf. Comput. Vis. Pattern Recognit.*, 2022, pp. 4113–4122.

[24] Z. Ba et al., "Exposing the deception: Uncovering more forgery clues for deepfake detection," in *Proc. AAAI Conf. Artif. Intell.*, 2024, pp. 719–728.

[25] X. Liao, Y. Wang, T. Wang, J. Hu, and X. Wu, "FAMM: Facial muscle motions for detecting compressed deepfake videos over social networks," *IEEE Trans. Circuits Syst. Video Technol.*, vol. 33, no. 12, pp. 7236–7251, Dec. 2023.

[26] G. Zhang, Q. Li, M. Gao, S. Guo, G. Jeon, and A. M. Abdelmoniem, "Space–frequency and global–local attentive networks for sequential deepfake detection," *IEEE Trans. Comput. Soc. Syst.*, early access, Feb. 25, 2025, doi: 10.1109/TCSS.2025.3541346.

[27] C. Tian, Z. Luo, G. Shi, and S. Li, "Frequency-aware attentional feature fusion for deepfake detection," in *Proc. IEEE Int. Conf. Acoust. Speech Signal Process.*, 2023, pp. 1–5.

[28] Y. Wang, K. Yu, C. Chen, X. Hu, and S. Peng, "Dynamic graph learning with content-guided spatial-frequency relation reasoning for deepfake detection," in *Proc. IEEE Conf. Comput. Vis. Pattern Recognit.*, 2023, pp. 7278–7287.

[29] B. Wang, X. Wu, F. Wang, Y. Zhang, F. Wei, and Z. Song, "Spatial-frequency feature fusion based deepfake detection through knowledge distillation," *Eng. Appl. Artif. Intell.*, vol. 133, Jul. 2024.

[30] J. Chen, X. Liao, Z. Qian, and Z. Qin, "PRest-Net: Multi-domain probability estimation network for robust image forgery detection," *ACM Trans. Multimed. Comput. Commun. Appl.*, vol. 21, no. 3, pp. 1–20, Mar. 2025.

[31] F. Chollet, "Xception: Deep learning with depthwise separable convolutions," in *Proc. IEEE Conf. Comput. Vis. Pattern Recognit.*, 2017, pp. 1251–1258.

[32] Y. Yang, G. Yuan, and J. Li, "SFFNet: A wavelet-based spatial and frequency domain fusion network for remote sensing segmentation," *IEEE Trans. Geosci. Remote Sens.*, vol. 62, Jul. 2024, Art. no. 3427370.

[33] D. P. Kingma and J. Ba, "Adam: A method for stochastic optimization," in *Proc. Int. Conf. Learn. Represent.*, 2015, pp. 1–15.

[34] A. Rossler, D. Cozzolino, L. Verdoliva, C. Riess, J. Thies, and M. Nießner, "Faceforensics++: Learning to detect manipulated facial images," in *Proc. IEEE Int. Conf. Comput. Vis.*, 2019, pp. 1–11.

[35] Y. Li, X. Yang, P. Sun, H. Qi, and S. Lyu, "Celeb-DF: A large-scale challenging dataset for deepfake forensics," in *Proc. IEEE Conf. Comput. Vis. Pattern Recognit.*, 2020, pp. 3207–3216.

[36] B. Zi, M. Chang, J. Chen, X. Ma, and Y.-G. Jiang, "Wilddeepfake: A challenging real-world dataset for deepfake detection," in *Proc. ACM Int. Conf. Multimedia*, 2020, pp. 2382–2390.

[37] J. Deng, J. Guo, E. Ververas, I. Kotsia, and S. Zafeiriou, "Retinaface: Single-shot multi-level face localisation in the wild," in *Proc. IEEE Conf. Comput. Vis. Pattern Recognit.*, 2020, pp. 5203–5212.

[38] H. Liu, X. Li, W. Zhou, Y. Chen, Y. He, H. Xue, W. Zhang, and N. Yu, "Spatial-phase shallow learning: Rethinking face forgery detection in frequency domain," in *Proc. IEEE Conf. Comput. Vis. Pattern Recognit.*, 2021, pp. 772–781.

[39] C. Wang and W. Deng, "Representative forgery mining for fake face detection," in *Proc. IEEE Conf. Comput. Vis. Pattern Recognit.*, 2021, pp. 14923–14932.

[40] H. H. Nguyen, F. Fang, J. Yamagishi, and I. Echizen, "Multi-task learning for detecting and segmenting manipulated facial images and videos," in *Proc. IEEE 10th Int. Conf. Biometr. Theory, Appl. Syst. (BTAS)*, 2019, pp. 1–8.

[41] I. Masi, A. Killekar, R. M. Mascarenhas, S. P. Gurudatt, and W. AbdAlmageed, "Two-branch recurrent network for isolating deepfakes in videos," in *Proc. Eur. Conf. Comput. Vis.*, 2020, pp. 667–684.

[42] Z. Guo, Z. Jia, L. Wang, D. Wang, G. Yang, and N. Kasabov, "Constructing new backbone networks via space-frequency interactive convolution for deepfake detection," *IEEE Trans. Inf. Forensics Security*, vol. 19, pp. 401–413, 2023.

[43] D. Zhang, J. Chen, X. Liao, F. Li, J. Chen, and G. Yang, "Face forgery detection via multi-feature fusion and local enhancement," *IEEE Trans. Circuits Syst. Video Technol.*, vol. 34, no. 9, pp. 8972–8977, Sep. 2024.

[44] J. Li, H. Xie, J. Li, Z. Wang, and Y. Zhang, "Frequency-aware discriminative feature learning supervised by single-center loss for face forgery detection," in *Proc. IEEE Conf. Comput. Vis. Pattern Recognit.*, 2021, pp. 6458–6467.

[45] H. Zhao, W. Zhou, D. Chen, T. Wei, W. Zhang, and N. Yu, "Multi-attentional deepfake detection," in *Proc. IEEE Conf. Comput. Vis. Pattern Recognit.*, 2021, pp. 2185–2194.