This article has been accepted for inclusion in a future issue of this journal. Content is final as presented, with the exception of pagination.

Federated Learning-Driven Face Forgery Detection via Rich Feature Complementary Fusion

Siyou Guo, Qilei Li, Mingliang Gao, *Senior Member, IEEE*, Guisheng Zhang, and Gwanggil Jeon, *Senior Member, IEEE*

***Abstract*—The rapid expansion of cyber–physical–social systems (CPSSs) highlights the critical need for authentic digital interactions. However, this progress is threatened by deepfake technology, which can undermine system security and trust. Existing deepfake detection models, while effective, typically require centralized data and thus create significant privacy and security vulnerabilities. Furthermore, their reliance on single-modal RGB data limits their ability to detect sophisticated forgeries. This work introduces a novel framework that tackles both challenges simultaneously. We leverage federated learning (FL) to enable collaborative model training without sharing sensitive data and preserving privacy. To enhance detection accuracy, we move beyond single-modal inputs by incorporating a spatial-rich model (SRM) to extract high-frequency features indicative of manipulation. These features are then synergistically fused with RGB data via a specialized module to improve the model's discriminative power. Experimental results on the FF++ dataset demonstrate that the proposed method achieves an accuracy of 92.00% and an AUC of 97.69%, which outperforms other competitors. These results validate the power of the multimodal fusion strategy and FL paradigm.**

***Index Terms*—Face forgery detection, feature fusion, federated learning (FL), privacy protection.**

I. Introduction

WHAT is seen can no longer be taken as reality. The advent of advanced image manipulation techniques has fundamentally compromised the reliability of digital visual content [1], [2], [3]. Techniques such as face-swapping, attribute modification, and object removal are now widely accessible. Individuals across all levels of proficiency can effortlessly create forged images and clips. However, when exploited with malicious intent, deepfakes pose significant threats [4], [5]. These highly realistic synthetic media can easily deceive both human observers and automated systems. Therefore, there is an urgent demand for the development of robust detection methodologies to counter these escalating threats.

Cyber–physical–social systems (CPSSs), which integrate digital infrastructure with human and physical interactions, are particularly susceptible to the disruptive threats posed by deepfakes [6]. These systems rely heavily on trustworthy visual data for critical applications such as digital identity verification [7], surveillance [8], and behavioral influence analysis [9]. However, deepfake technologies undermine the fundamental trust essential for the effective operation of CPSS. Consequently, ensuring data authenticity within these systems presents an increasing challenge.

Recent researchers [10], [11], [12], [13], [14] have investigated deepfake detection using deep learning models. However, these solutions often fall short in two critical areas: the inadequate protection of training data and a reliance on single-modality detection. Many detection methods [15], [16], [17], [18], [19], [20], [21], [22] depend on centralized data processing, which necessitates the collection and sharing of sensitive information, such as facial images, thereby posing significant privacy risks. Furthermore, these models [10], [12], [15], [18], [23] frequently utilize single-modality image features, which may neglect subtle manipulations and constrain detection accuracy. To provide a consolidated overview and comparison, Table I summarizes the key characteristics of these and other relevant face forgery detection methods.

To overcome these limitations, a deepfake detection framework is proposed to enhance both privacy preservation and detection efficacy through collaborative and multimodal learning strategies. The proposed framework adopts federated learning (FL) [24], a decentralized training method that maintains data on user devices. By employing FL, the proposed framework facilitates secure model training across distributed CPSS environments. This approach enhances the scalability and safeguards the privacy of deepfake detection processes.

Regarding detection capabilities, utilizing the RGB channels only is insufficient for detecting deepfake facial manipulations.

Received 21 November 2024; revised 5 June 2025 and 13 October 2025; accepted 31 December 2025. This work was supported in part by the China Postdoctoral Science Foundation under Grant 2025M781597 and in part by the Shandong Province Undergraduate Teaching Reform Project under Grant Z2024184. *(Siyou Guo and Qilei Li contributed equally to this work.) (Corresponding author: Mingliang Gao.)*

Siyou Guo, Mingliang Gao, and Guisheng Zhang are with Shandong Provincial Key Laboratory of New Power Distribution and Utilization Technology and Equipment, School of Electrical and Electronic Engineering, Zibo 255000, China (e-mail: 23504030565@stumail.sdut.edu.cn; mlgao@sdut.edu.cn; 22504030001@stumail.sdut.edu.cn).

Qilei Li is with the Faculty of Artificial Intelligence in Education, the National Engineering Research Center for Educational Big Data, and the Academy of Frontier Interdisciplinary Research, Central China Normal University, Wuhan 430079, China (e-mail: qilei.li@ccnu.edu.cn).

Gwanggil Jeon is with the Department of Embedded Systems Engineering, Incheon National University, Incheon 22012, South Korea (e-mail: ggjeon@gmail.com).

Digital Object Identifier 10.1109/TCSS.2026.3651124

2329-924X © 2026 IEEE. All rights reserved, including rights for text and data mining, and training of artificial intelligence and similar technologies. Personal use is permitted, but republication/redistribution requires IEEE permission. See https://www.ieee.org/publications/rights/index.html for more information.

Authorized licensed use limited to: Shandong University of Technology. Downloaded on February 28,2026 at 11:37:31 UTC from IEEE Xplore. Restrictions apply.

This article has been accepted for inclusion in a future issue of this journal. Content is final as presented, with the exception of pagination.

TABLE I
OVERVIEW OF DEEPFAKE DETECTION METHODS FROM THE LITERATURE

Method	RGB Features	Texture Features	Data Privacy	Characters
McCloskey et al. [10]	✓	✗	✗	Focuses on frequency of saturated/underexposed pixels
Anwar et al. [11]	✓	✓	✗	Extracts noise features
Frank et al. [12]	✗	✓	✗	Uses the spectral analysis
Lan et al. [13]	✓	✓	✗	Combined frequency domain analysis with noise features
Wang et al. [14]	✓	✓	✗	Detects forensic noise traces
Nguyen et al. [15]	✓	✗	✗	Multi-task learning for detecting and segmenting
Zhao et al. [16]	✓	✗	✗	Multi-attentional deepfake detection
Masi et al. [17]	✓	✗	✗	Two-branch recurrent network for isolating deepfakes in videos
Cao et al. [18]	✓	✗	✗	Differences in the reconstruction of faces
Zhang et al. [19]	✓	✗	✗	Multi-modal detection with gate fusion
Zhang et al. [20]	✓	✗	✗	Sequential deepfake detection
Hu et al. [23]	✓	✗	✓	Capturing dynamic inconsistencies between adjacent frames in fake videos
Ours	✓	✓	✓	Spatial rich model; federated learning for data privacy

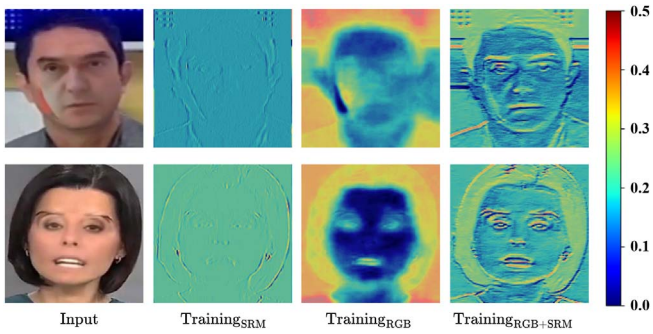

Fig. 1. Visualizations of features generated by different approaches. Training$_{SRM}$ and Training$_{RGB}$ depict features from the Xception model trained on separate modalities. Training$_{RGB+SRM}$ reflects the result of applying CCE across both modalities (ours).

They have a limited capacity to capture subtle variations in texture and detail. The proposed framework introduces a multi-branch feature extraction method that integrates both RGB and spatial rich model (SRM)-based [25] features to enhance detection accuracy. To be specific, RGB-based features capture color and overall structural information. In contrast, SRM focuses on extracting fine-grained texture and noise feature details, which are elements often subjected to manipulation in deepfake content. As shown in Fig. 1, the combined application of both modalities is more effective than the individual use of either SRM or RGB. By amalgamating these two modalities, the proposed framework heightens sensitivity to subtle artifacts often overlooked by single-modality approaches.

Although multimodal information has been introduced, effectively utilizing the features extracted from both modalities remains a challenge. To address this problem, we propose a rich feature fusion (RFF) module that adeptly integrates RGB and SRM features. This module is designed to harmonize information from both modalities to increase sensitivity to subtle artifacts in deepfake content. The main contributions are as follows.

1) FL is introduced to the face forgery detection task to address data security and privacy concerns.
2) RGB images are amalgamated with SRM noise modality to enhance the detection of subtle manipulation artifacts missed by single-modal methods.
3) An RFF module is presented within the detection framework to leverage the information from both modalities.

The remainder of this article is organized as follows. Section II reviews the literature on face forgery detection and FL methods for privacy-preserving data handling. Section III introduces the FL framework. Section IV delineates the architecture of the proposed face forgery detection framework. Section V examines the experimental setup, datasets, evaluation metrics, and detection outcomes. Section VI presents the ablation results and visualization analysis. Section VII synthesizes the findings and future work.

II. RELATED WORK

A. Face Forgery Detection

Face forgery detection is a task that aims to distinguish between real and manipulated facial images [26], [27]. Earlier approaches focused on manual image processing techniques, such as splicing, removal, and copy-move, based on certain inherent statistical properties of the images. However, manually designing robust and reliable features proved to be a challenging task. With the rise of deep learning, researchers initially fed images directly into the vanilla convolutional neural network (CNN) for classification. Later, more sophisticated approaches began incorporating noise features, frequency features, and texture features. For instance, McCloskey et al. [10] measured the frequency of saturated and underexposed pixels to distinguish between real and fake faces. Anwar et al. [11] employed the denoiser to extract noise features from video frames. Frank et al. [12] used the entire spectrum as a feature to distinguish authenticity. Lan et al. [13] combined frequency domain analysis with noise features to detect deepfake forgeries. The discrete cosine transform is employed to perceive forgery trace features in different frequency bands. NoiseDF [14] is designed to detect forensic noise traces left by deepfake videos. However, these methods largely overlooked the issue of data privacy. To this aim, FL is introduced to ensure the privacy of training data. Additionally, the SRM [25] is incorporated to detect noise-level

Authorized licensed use limited to: Shandong University of Technology. Downloaded on February 28,2026 at 11:37:31 UTC from IEEE Xplore. Restrictions apply.

This article has been accepted for inclusion in a future issue of this journal. Content is final as presented, with the exception of pagination.

anomalies. By integrating RGB images with SRM noise residuals, the proposed detection model captures subtle manipulation artifacts frequently overlooked by single-modal techniques.

B. FL

FL is a distributed machine learning approach that enables collaborative training across decentralized devices without directly sharing data [28], [29], [30], [31]. McMahan et al. [24] proposed the FedAvg method as an effective implementation of FL. Subsequently, numerous researchers have endeavored to enhance FedAvg and concentrate primarily on four pivotal areas. Reisizadeh et al. [32] improved communication efficiency through periodic averaging and quantization techniques. Wei et al. [33] introduced artificial noise to the local parameters of clients before model aggregation, thereby strengthening privacy. In the aggregation phase, Wang et al. [34] employed Bayesian nonparametric methods for layerwise weight matching and averaging. FedAvgM [35] incorporates momentum in updating the global model at the server. Furthermore, a recent method, FedNova [36], normalizes local updates before executing the averaging process. Recently, FL has been widely used in different deep-learning tasks [37], [38], [39], [40], [41], [42]. Miao et al. [43] proposed FedSeg, a basic FL approach for class-heterogeneous semantic segmentation. Idrissi et al. [44] introduced Fed-ANIDS, a network intrusion detection system designed to incorporate anomaly detection and FL. In this work, we underscore the data security and privacy concerns inherent in face forgery detection.

III. Preliminary: Federated Model Learning

As shown in Fig. 2, we consider N clients and a global server for global parameter aggregation. Each client has a distinct training dataset, denoted as $\{D_A, D_B, \ldots, D_N\}$, and the total dataset is represented as $|D|$. All clients run the same detection model (the proposed detection model is detailed in Section IV) and have the same training objective. There is no data sharing between clients, and only model parameters are communicated between each client and the global server. The entire training process consists of the following steps.

Parameter Loading: At the initial training stage, all clients commence with identical pretrained parameters for the detection model. Before each round of local training, clients synchronize their local model parameters by updating them with the most recent global parameters (w_t^{Global}) obtained from the central server.

Local Update: Each client independently trains its local detection model on its dataset D_i for E epochs. During this local training phase, no data are shared among clients. One parameter update on the client proceeds as follows:

$$w_t^e = w_t^e - \eta_e \cdot \frac{\partial \ell(b; w_t^e)}{\partial w_t^e} \tag{1}$$

where w_t^e represents the model parameters of the client E at iteration t. The learning rate η_e controls the step size for the parameter update. $(\partial \ell(b; w_t^e)/\partial w_t^e)$ is the gradient of the loss function ℓ with respect to the parameters w_{t_i}, computed from a mini-batch b of data samples. After local training, they upload their local parameters to the global server.

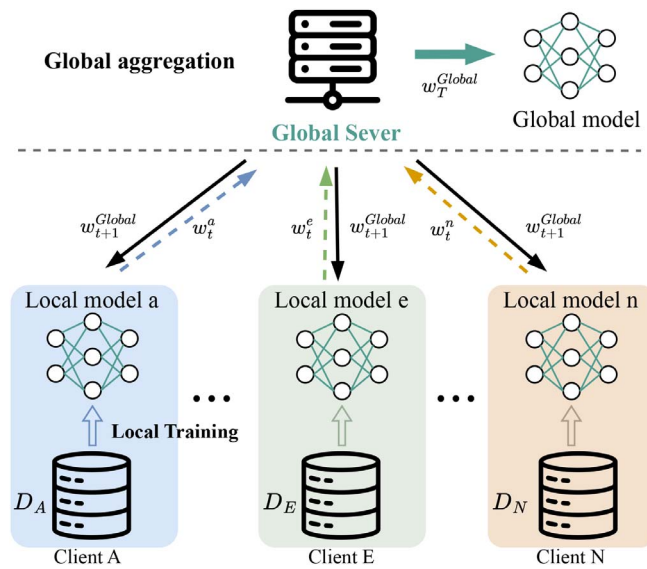

Fig. 2. Pipeline of federated learning framework.

Global Aggregation: In alignment with FedAvg [23], the federated averaging algorithm is integrated into the proposed framework. During the global aggregation phase, the global server computes the average of all local parameters

$$w_{t+1}^{\text{Global}} = \sum_{e=1}^{N} \frac{|D_e|}{|D|} w_t^e. \tag{2}$$

The global server can incrementally improve the global model at each aggregation. This iterative process continues for T rounds. Upon completion of the Tth round, the final global parameters w_{Global} are obtained. These parameters are subsequently loaded into the detection model architecture. This culminates in a global model that can be deployment-ready.

IV. Proposed Detection Model

The proposed deepfake detection framework is an end-to-end model built on an enhanced Xception [45] network architecture. The framework is illustrated in Fig. 3. It is composed of dual-modality inputs, including both conventional RGB images and an additional modality from SRM filters. The entry flow of the framework is designed as a two-branch parallel architecture, with each branch independently processing one modality. The outputs from both branches are then integrated through the cross-modality consistency enhancement (CCE) module and the RFF module. The fused feature maps are then passed into the middle flow of the Xception network for further processing. The following sections describe the framework components in detail.

A. SRM

Relying solely on RGB channels is insufficient for detecting deepfake facial manipulations. This approach overlooks crucial

Authorized licensed use limited to: Shandong University of Technology. Downloaded on February 28,2026 at 11:37:31 UTC from IEEE Xplore. Restrictions apply.

This article has been accepted for inclusion in a future issue of this journal. Content is final as presented, with the exception of pagination.

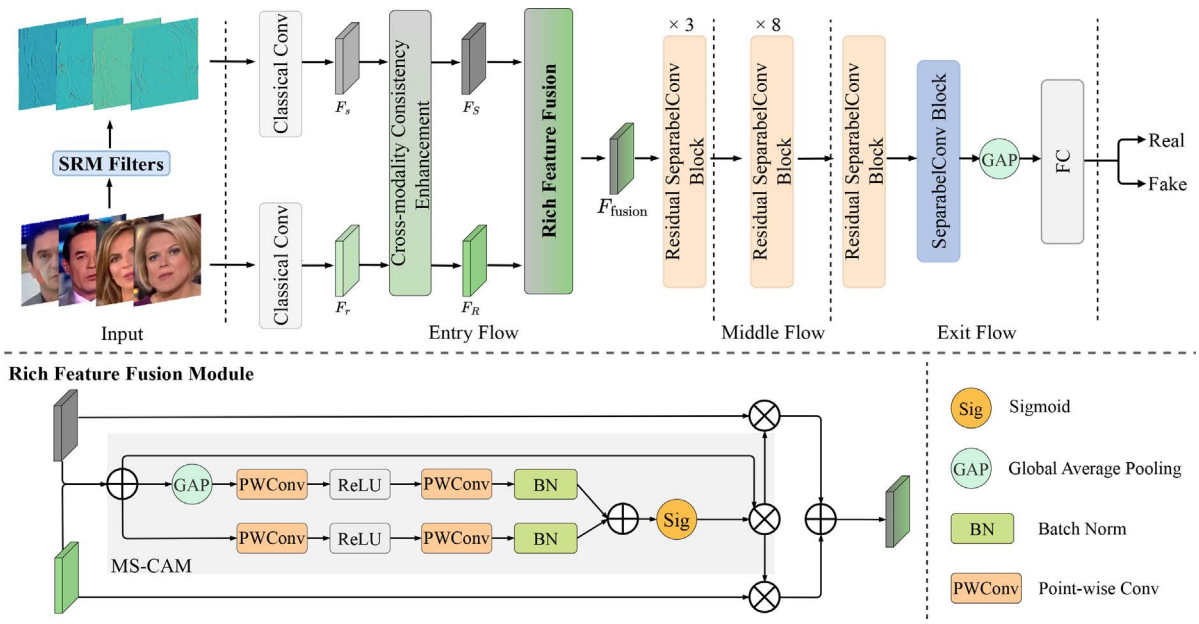

Fig. 3. Framework of the proposed model for face forgery detection.

spatial and frequency features. To overcome these limitations, the SRM is employed to extract pixel differences in the spatial domain. The SRM focuses on spatial and noise features to thoroughly capture local details and subtle image characteristics. As illustrated in Fig. 1, the feature maps during training are visualized under three conditions, i.e., using RGB only, SRM only, and the combination of both modalities. It is observed that relying solely on RGB has a limited capacity to capture subtle variations in texture and detail.

The filters are repeated three times for RGB images as shown in Fig. 4. The three convolutional kernels in the SRM are employed to capture a wide variety of subtle image artifacts or noise characteristics. They achieve this by capturing different frequency components of the image and analyzing various noise patterns across multiple scales. Each of these kernels is specifically designed to be sensitive to slightly different types of high-frequency details, textures, or statistical irregularities. This targeted sensitivity allows the model to effectively identify subtle changes that might be introduced during image manipulation. As a result, subtle manipulation traces are effectively detected.

B. CCE

To learn a unified representation from both RGB and SRM modalities, the proposed model diverged from previous methods [17], [46], [47] by not merging the two modalities through direct connections or attention-based enhancements. Instead, the proposed model focuses on preserving the unique characteristics of each branch while effectively capturing the interactions and interdependencies between the two modalities.

Specifically, the inputs of the CCE module comprise the RGB modality feature map $F_r \in \mathbb{R}^{c\times h\times w}$ and the SRM modality feature map $F_s \in \mathbb{R}^{c\times h\times w}$. A cross-modal consistency map is employed to facilitate the interaction between these modalities.

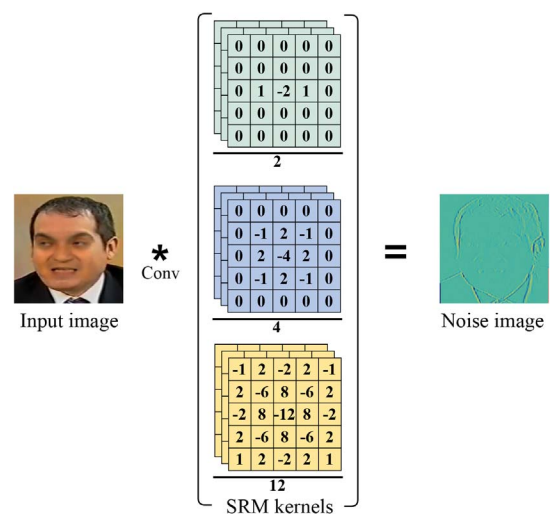

Fig. 4. Illustration of SRM convolution.

This map uses an elementwise inner product and enables the measurement of the correlation between corresponding features across both modalities. This is computed as follows:

$$\mathrm{Corr}(f_r^i, f_s^i) = \frac{f_r^i \cdot f_s^i}{||f_r^i||_2 ||f_s^i||_2} \tag{3}$$

where $f_r^i \in \mathbb{R}^{c\times 1\times 1}$, $f_s^i \in \mathbb{R}^{c\times 1\times 1}$, and $i \in \{1, ..., hw\}$. Then, the computed correlation map is used to enhance the features from both modalities. The updated RGB modality feature F_R and the updated SRM modality feature F_S are calculated by incorporating the cross-modal consistency map as follows:

$$\begin{aligned} F_R &= \delta\left(F_r + \mathrm{Corr} \odot F_s\right) \\ F_S &= \delta\left(F_s + \mathrm{Corr} \odot F_r\right) \end{aligned} \tag{4}$$

where $\delta(\cdot)$ is the ReLU activation function.

Authorized licensed use limited to: Shandong University of Technology. Downloaded on February 28,2026 at 11:37:31 UTC from IEEE Xplore. Restrictions apply.

This article has been accepted for inclusion in a future issue of this journal. Content is final as presented, with the exception of pagination.

This process enables the model to adjust the features based on their interactions. The CCE module enhances the representational power of each modality while maintaining its characteristics.

C. RFF

The RFF module is designed to aggregate the features of both SRM and RGB images. RFF enriches the overall representation of features through the integration of multiple input feature maps. This module enables the model to flexibly adapt to different object scales and complexities. The multiscale channel attention module (MS-CAM) is a central component of the RFF module. MS-CAM focuses on capturing both global and local channel context information across multiple scales, which enable the module to emphasize relevant features of varying sizes and complexities. For two input feature maps, F_R and F_S, the output of RFF module, F_{fusion}, is computed as follows:

$$F_{\text{fusion}} = M(F_R \oplus F_S) \otimes F_R + (1 - M(F_R \oplus F_S)) \otimes F_S \tag{5}$$

where $M(\cdot)$ represents the fusion weight generated by the MS-CAM. It functions as a soft gate to adaptively balance the two modalities. The symbol $\oplus$ signifies the initial elementwise addition of the feature maps.

By incorporating multiscale context aggregation in the channel attention mechanism, MS-CAM can emphasize features of various scales. The processing procedure of MS-CAM is as follows.

1) Local Context Calculation: First, MS-CAM calculates the local context to aggregate local information within channels. The formula for local context calculation is as follows:

$$L_c(F) = \mathrm{BN}\left(\mathrm{PWC_b}\left(\delta\left(\mathrm{BN}\left(\mathrm{PWC_a}(F)\right)\right)\right)\right) \tag{6}$$

where $\mathrm{PWC_a}(\cdot)$ and $\mathrm{PWC_b}(\cdot)$ denote pointwise convolution, and it is used to aggregate local channel contexts. $\mathrm{BN}(\cdot)$ represents batch normalization, and $\delta(\cdot)$ is the ReLU activation function. The output of this calculation is denoted as $L_c(F)$.

2) Fusing Local and Global Contexts: Then, the local context features are extracted and combined with global context features to generate adaptive attention weights across different scales. The fusion process is formulated as

$$F' = F \otimes M(F) = F \otimes \sigma\left(L_c(F) \oplus G_c(F)\right) \tag{7}$$

where $\oplus$ denotes elementwise addition, $\otimes$ represents elementwise multiplication, and $\sigma(\cdot)$ is the Sigmoid activation function. By combining local context $L_c(F)$ with global context $G_c(F)$, MS-CAM dynamically adjusts the significance of channel features across different scales.

D. Loss Function

The binary cross-entropy loss was employed to train the proposed model. For each sample i, given the ground truth label $y_i \in \{0, 1\}$ and the predicted probability $\hat{y}_i$, the loss is defined as

$$\mathcal{L} = -\frac{1}{N}\sum_{i=1}^{N}\left[y_i \log(\hat{y}_i) + (1 - y_i)\log(1 - \hat{y}_i)\right]. \tag{8}$$

This loss function ensures the model maximizes its classification accuracy by minimizing the discrepancy between predicted and true labels.

V. Experimental Results and Analysis

A. Experimental Setup

1) Datasets: Extensive experiments are conducted on three widely used public benchmark datasets. FaceForensics++ (FF++) [48] is a large-scale face manipulation dataset with over 500 000 forged images. It includes four different manipulation methods, i.e., DeepFakes (DF), Face2Face (F2F), FaceSwap (FS), and NeuralTextures (NT), which represent different directions in current facial forgery technology. The dataset offers three compression formats, including raw, c23, and c40, to test model robustness under different image qualities. Celeb-DF [49] contains high-resolution videos with fewer visual artifacts. This makes the deepfakes more realistic and harder to detect. The dataset contains both real and advanced deepfake videos that closely resemble real-world manipulations. Wild-Deepfake [50] simulates real-world deepfake scenarios by collecting videos from uncontrolled environments. These videos feature varied lighting, angles, and occlusions. Unlike studio-captured datasets, it features low-quality footage and complex backgrounds. It offers a realistic benchmark to evaluate the robustness of deepfake detection methods.

2) Evaluation Metrics: The proposed model was evaluated using standard binary classification metrics: accuracy (Acc), area under the ROC curve (AUC), and equal error rate (EER). Acc measures the overall performance of the model across all samples. AUC provides a deeper understanding of its ability to distinguish between positive and negative classes. Moreover, EER, denoting the threshold at which the rates of false acceptance and rejection converge, was utilized for cross validation.

3) Implementation Details: In the dataset processing, the RetinaFace technique [51] was used for face detection, with 32 frames extracted from each video. Data augmentation is limited to random horizontal flipping to increase the diversity of training samples. The training process employs a batch size of 32 over 60 epochs, with a stepwise learning rate scheduler that adjusts the learning rate dynamically throughout the training. The Adam optimizer is initialized with a learning rate of 2×10^{-4} and a weight decay of 1×10^{-5} to promote regularization and prevent overfitting. This framework is implemented in PyTorch with two 3090 Ti GPUs.

4) Federated Settings: To simulate decentralized datasets in FL, we randomly and uniformly split the training dataset into N nonoverlapping subsets, each stored on a local client. The clients are indexed by $e \in [1, N]$, and the dataset on client e is represented as D_e, with a size of $|D_e|$. The total number of data points across all clients is given by $|D| = \sum_{e=1}^{N} |D_e|$. The training proceeds over T global rounds, with each client performing E local epochs. The learning rate for client e is denoted by η_e. The results under varying parameter settings will be thoroughly examined in Section VI.

Authorized licensed use limited to: Shandong University of Technology. Downloaded on February 28,2026 at 11:37:31 UTC from IEEE Xplore. Restrictions apply.

This article has been accepted for inclusion in a future issue of this journal. Content is final as presented, with the exception of pagination.

TABLE II
OBJECTIVE RESULT OF INTRA-TESTING ON THE FF++ C40 DATASET

Methods	Acc (%)	AUC (%)
MesoNet [52]	70.47	-
SPSL [53]	81.57	82.82
RFM [54]	87.06	89.83
Freq-SCL [55]	89.00	92.39
Multi-task [15]	81.30	75.59
Face X-ray [56]	-	61.60
Xception [45]	86.86	89.30
Add-Net [50]	87.50	91.01
Two-branch [17]	86.34	86.59
FoCus [57]	87.31	91.01
DFF+LEA [58]	79.58	89.93
MultiAtt [16]	88.69	90.40
RECCE [18]	91.03	95.02
Ours	**92.00**	**97.69**

Note: The best results are highlighted in bold and similarly hereinafter.

TABLE III
OBJECTIVE RESULT OF INTRA-TESTING ON THE WILDDEEPFAKE AND CELEB-DF DATASETS

Methods	WildDeepfake		Celeb-DF	
	Acc (%)	AUC (%)	Acc (%)	AUC (%)
RFM [54]	77.38	83.92	97.96	99.94
Xception [45]	77.25	86.76	97.90	99.73
Add-Net [50]	76.25	86.17	96.93	99.55
MultiAtt [16]	82.86	90.71	97.92	99.94
RECCE [18]	**84.26**	**91.54**	98.59	99.94
Ours	83.35	89.94	**99.61**	**99.96**

Note: Bold entries indicate the best results.

TABLE IV
OBJECTIVE RESULT OF CROSS TESTING

Methods	WildDeepfake		Celeb-DF	
	AUC (%) ↑	EER (%) ↓	AUC (%) ↑	EER (%) ↓
Xception [45]	62.72	40.65	61.80	41.73
RFM [54]	57.75	45.45	65.63	38.54
Add-Net [50]	62.35	41.42	65.29	38.90
F^3-Net [59]	57.10	45.12	61.51	42.03
MultiAtt [16]	59.74	43.73	67.02	37.90
RECCE [18]	64.31	40.53	68.71	35.73
Ours	**64.81**	**40.13**	**69.11**	**35.43**

Note: "↓" means the lower the better, and "↑" means the higher the better. Bold entries indicate the best results.

B. Experimental Results

1) Intra-Domain Testing: To assess the in-domain detection capabilities of the proposed framework, the intra-domain testing is performed on the FF++ dataset. Data from the c40 compression level of FF++ are used for both training and evaluation. Comparative results are shown in Table II. The proposed model achieves an Acc of 92.00% and an AUC of 97.69%. It outperforms the baseline by 5.14% in Acc and 8.39% in AUC. Compared to RECCE, it shows an improvement of 0.97% in Acc and 2.67% in AUC.

Table III provides the performance results on the Celeb-DF and WildDeepfake datasets. The proposed methods perform best on the Celeb-DF dataset in both Acc and AUC. On the WildDeepfake dataset, it ranks second in Acc and third in AUC. One possible explanation for this difference in performance could be related to the SRM, specifically designed to capture fine-grained spatial features and image textures. The SRM has demonstrated strong capabilities on datasets such as Celeb-DF, where it excels in identifying intricate manipulations. However, the WildDeepfake dataset presents additional challenges with its real-world variations, such as complex background noise. These variations may introduce elements that go beyond the primary focus of the SRM. Nonetheless, the model still achieves the second-highest performance level. This highlights the robustness of the SRM in diverse scenarios, even when faced with real-world complexities.

2) Cross-Domain Testing: To evaluate the generalization performance, we conducted two distinct sets of experiments. First, we assessed its cross-dataset generalization by training it exclusively on the FF++ dataset and testing it on unseen Celeb-DF and WildDeepfake. The results of the cross-dataset generalization experiments are presented in Table IV. It achieves state-of-the-art AUC scores of 69.11% on Celeb-DF and 64.81% on WildDeepfake. This achievement is attributable to a multimodal feature fusion strategy, which integrates texture features emphasized by the SRM into a single RGB feature.

To assess the capacity of the model to address diverse forgery types, we examined its performance across four manipulation techniques within the FF++ dataset. Table V demonstrates the adaptability of the model across different manipulation methods. The results indicate that the model achieves a good performance across manipulation types, with slight variations in detection rates attributed to the inherent differences in forgery styles. This experiment underscores the versatility of the framework in detecting multiple types of image manipulations within a single dataset.

VI. DISCUSSION

A. Ablation Study

1) Effectiveness of Components: To evaluate the effectiveness of each module in the proposed detection framework, we conducted ablation studies with the core components, and the results are shown in Table VI.

a) *Baseline*: The standard Xception architecture was employed as the baseline. The Xception processes only the RGB modality, which limits its ability to capture rich spatial patterns essential for detecting subtle artifacts in forged images. The baseline Xception model achieves an Acc of 86.86% and an AUC of 89.30% on the FF++ dataset. The result highlights its foundational efficacy in forgery detection without additional modality or fusion mechanisms.

b) *Xception + SRM*: In this configuration, the SRM module is introduced to process spatial features that are often

Authorized licensed use limited to: Shandong University of Technology. Downloaded on February 28,2026 at 11:37:31 UTC from IEEE Xplore. Restrictions apply.

This article has been accepted for inclusion in a future issue of this journal. Content is final as presented, with the exception of pagination.

TABLE V
COMPARISON OF GENERALIZATION RESULTS ACROSS MANIPULATION METHODS DETECTION WITHIN THE FF++ DATASET

Methods	Train	Evaluation Datasets				
		DF	F2F	FS	NT	Avg.
EfficientNet [60]	DF	98.63	60.55	59.65	60.87	60.36
Freq-SCL [55]		98.91	58.90	66.87	63.61	63.13
MultiAtt [16]		99.51	66.41	67.33	66.01	66.58
RECCE [18]		99.65	70.66	74.29	67.34	70.76
Ours		**99.89**	**71.51**	**74.42**	**68.03**	**71.32**
EfficientNet [60]	F2F	70.60	60.55	59.65	60.87	60.36
Freq-SCL [55]		67.55	93.06	55.35	66.66	63.19
MultiAtt [16]		73.04	97.96	65.10	71.88	70.01
RECCE [18]		75.99	**98.06**	64.53	**72.32**	70.95
Ours		**76.83**	96.75	**65.42**	71.98	**71.40**
EfficientNet [60]	FS	71.90	59.79	97.98	51.04	60.91
Freq-SCL [55]		75.90	54.64	98.37	49.72	60.09
MultiAtt [16]		82.33	61.65	98.82	54.79	66.26
RECCE [18]		83.39	**64.44**	98.82	56.70	67.84
Ours		**83.95**	63.11	**98.93**	**56.92**	**67.99**
EfficientNet [60]	NT	71.92	68.19	51.62	86.89	63.91
Freq-SCL [55]		79.09	74.21	53.99	88.54	69.10
MultiAtt [16]		74.56	80.61	60.90	93.34	72.02
RECCE [18]		78.83	80.89	63.70	93.63	74.47
Ours		**79.22**	**81.05**	**64.12**	**93.65**	**74.79**

Note: The evaluation metric is AUC (%). Bold entries indicate the best results.

TABLE VI
ABLATION STUDY ON THE EFFECTIVENESS OF DIFFERENT MODULES IN THE PROPOSED FRAMEWORK

Methods	Acc (%)	AUC (%)
w/o SRM & RFF	86.86	89.30
w/o RFF	90.02	93.57
Ours	**92.00**	**97.69**

Note: Bold entries indicate the best results.

less detectable in RGB only. The SRM module enhances the model by focusing on specific spatial cues and capturing textural inconsistencies characteristic of deepfake forgeries. Integrating SRM with the Xception network improves the capability of the model to detect these subtle spatial patterns. Adding SRM yields an Acc improvement of 90.02% and an AUC increase of 93.57% compared to the baseline. The result indicates a notable enhancement in capturing forgery-specific features by employing SRM.

c) *The proposed model (Xception + SRM + RFF)*: The full model incorporates the RFF module, which combines the RGB and SRM features through a tailored fusion mechanism. This module is designed to effectively leverage complementary information from both modalities to provide a comprehensive feature representation. RFF significantly enhances the detection capacity of the model by merging the holistic RGB features with the fine-grained SRM features. The full model with RFF achieves the highest performance, with an Acc gain of 92.00% and an AUC boost of 97.69% over the baseline. This improvement underscores the importance of the RFF module in capturing and integrating multimodal features to enhance forgery detection. This ablation study proves the unique contributions of each module toward the overall detection performance.

2) Impact of FL Configurations: Experiments were conducted with FL on the FF++ dataset to evaluate the impact of varying the number of clients (N) and local epochs (E). Table VII presents experimental results with different configurations, which include centralized data settings and federated settings with various values of N and E. The experiments cover four forgery types, namely DF, F2F, FS, and NT. The results indicate that the model achieves high accuracy and AUC across all forgery types under centralized c23 data, with Deepfakes and FaceSwap yielding the best performance. However, when switching to c40 (lower image quality), performance decreases slightly, especially for NeuralTextures, due to reduced image clarity.

Under federated settings (c40), a performance tradeoff is observed based on the number of clients and local epochs. A degradation in model performance is characteristically observed with an increase in the number of clients (N) or a decrease in local epochs (E). The primary challenge arises from the growth in client numbers, which has led to increased statistical heterogeneity in local data. The divergence among local models in client hinders global aggregation. The second major obstacle arises from insufficient local iterations, which preclude the convergence of client models for building a robust global model. Nonetheless, when $N = 2$ and $\mathrm{E} = 5$, the model achieves the approximate results obtained in centralized training, particularly for Deepfakes and FaceSwap. These findings prove that fine-tuning of N and E in federated setups can mitigate the performance degradation and still achieve effective forgery detection in distributed environments.

B. Visualization and Analysis

To better illustrate the effectiveness of the proposed fusion module, we visualize the attention maps for two approaches processing two modalities, as shown in Fig. 5. These attention maps reveal the regions of interest that the model focuses on when detecting forgeries.

As illustrated, we present three distinct attention maps: 1) direct summing of SRM and RGB features; 2) generated after applying the RFF module; and 3) derived from the middle flow of Xception. A comparison between the direct addition and fusion strategies reveals clear differences in how the model prioritizes critical features. In the case of direct addition, the attention maps demonstrate a relatively coarse focus on the pivotal regions of interest. By contrast, the proposed fusion module refines this attention. It guides the model to highlight crucial texture details and forgery artifacts. As it is demonstrated in the fourth column of Fig. 5, after the fusion module, the model shifts its focus from the entire facial activation regions to facial textures. Facial boundaries and key facial features with distinct textures are more susceptible to revealing trails of forgery. This indicates that the fusion module improves the integration of the two modalities and optimizes the use of information from the SRM modality. Notably, the middle flow attention map closely

Authorized licensed use limited to: Shandong University of Technology. Downloaded on February 28,2026 at 11:37:31 UTC from IEEE Xplore. Restrictions apply.

This article has been accepted for inclusion in a future issue of this journal. Content is final as presented, with the exception of pagination.

TABLE VII
EXPERIMENTS OF FEDERATED LEARNING SETTINGS ON FF++ DATASET

Settings	Deepfakes		Face2Face		FaceSwap		NeuralTextures	
	Acc (%)	AUC (%)	Acc (%)	AUC (%)	Acc (%)	AUC (%)	Acc (%)	AUC (%)
Centralized c23 data	**95.66**	**99.16**	**96.85**	**99.45**	**96.89**	**99.35**	**90.92**	**95.54**
E = 5, $N = 2$, c23	95.23	99.01	94.92	99.06	97.05	99.20	89.96	94.93
Centralized c40 data	**92.43**	97.60	**87.94**	**95.27**	**93.78**	**98.40**	**78.42**	**87.27**
E = 5, $N = 2$, c40	91.36	**97.73**	87.79	95.11	91.53	97.12	76.96	84.96
E = 5, $N = 3$, c40	90.21	96.56	87.32	94.99	91.02	96.94	75.92	84.32
E = 3, $N = 2$, c40	89.71	95.37	87.79	94.75	89.34	95.27	76.22	84.96
E = 3, $N = 3$, c40	87.93	93.90	87.39	93.94	74.39	83.58	67.31	74.66
E = 3, $N = 4$, c40	84.46	91.36	86.89	94.24	75.41	82.96	65.91	74.49
E = 3, $N = 5$, c40	81.44	90.21	87.12	93.92	70.01	76.92	65.15	72.32

Note: The number of clients is N. The number of local epochs for clients is E. c23 and c40 represent the image qualities in FF++. Bold entries indicate the best results.

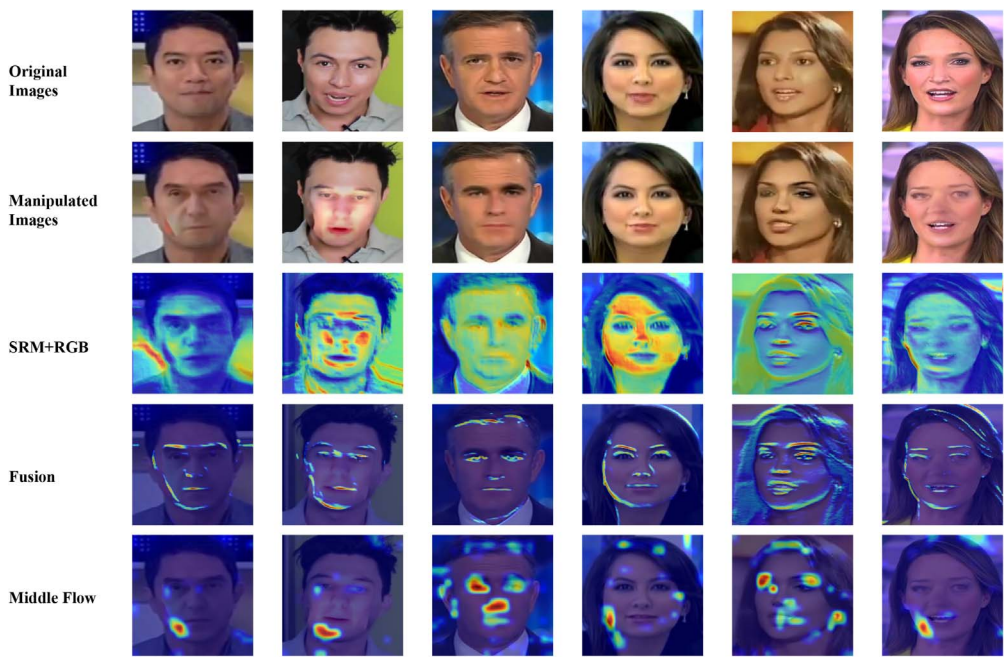

Fig. 5. Visualization of the attention maps. The first row shows the original images. The second row displays the manipulated images. The third row visualizes the attention maps obtained by directly adding SRM and RGB after the CCE module. After applying the RFF module, the fourth row shows the attention maps, and the fifth row presents the visualization of the middle flow.

aligns with the areas the model deems most significant for its decision-making process.

C. Analysis of Robustness

To evaluate the robustness of the proposed method, its resilience to common image transformations prevalent on social media platforms was evaluated. The experimental setup involved the simulation of five realistic perturbations, namely image compression, contrast jitter, Gaussian blur, saturation jitter, and pixelation. The results are detailed in Table VIII. It demonstrates that the proposed method maintains a high level of performance even when subjected to image transformations. Specifically, the score of AUC is 89.94% when there is no perturbation. The AUC decreases when suffering from the perturbation slightly. For instance, it still achieves 89.79% and 89.51% when suffering from contrast jitter and saturation jitter. This indicates that the proposed method is robust to these typical variations and maintains good generalization capabilities for real-world data.

D. Computational Complexity

To evaluate the efficiency of the proposed model, a comparative analysis of its computational complexity was conducted against established models, including Xception [45] and RECCE [18]. The results are summarized in Table IX. In terms of model parameters, the proposed model features a more compact architecture with 21.7 million. This is lower than both Xception (22.8M) and RECCE (23.78M), which indicates a potential advantage in terms of model size and storage. However, when considering FLOPs, the proposed model requires 18.7G

Authorized licensed use limited to: Shandong University of Technology. Downloaded on February 28,2026 at 11:37:31 UTC from IEEE Xplore. Restrictions apply.

This article has been accepted for inclusion in a future issue of this journal. Content is final as presented, with the exception of pagination.

TABLE VIII
ROBUSTNESS EVALUATION OF THE PROPOSED METHOD IN TERMS OF AUC (%) ON THE WILDDEEPFAKE DATASET

Type of Perturbation	AUC (%)
N/A	89.94
Image Compression	89.07
Contrast Jitter	89.79
Gaussian Blur	87.48
Saturation Jitter	89.51
Pixelation	85.44

TABLE IX
COMPARISON OF PARAMETERS AND FLOPS BETWEEN XCEPTION, RECCE MODEL, AND THE PROPOSED METHOD

Metric	Unit	Model		
		Xception [45]	RECCE [18]	Ours
Parameters	(M) ↓	22.8	23.78	21.7
FLOPs	(G) ↓	8.4	11.34	18.7

Note: The size of the input image is 299×299.

FLOPs. This result is notably higher than Xception (8.4G) and also surpasses RECCE (11.34G). These findings suggest that while the proposed model is more parameter-efficient, it may involve a greater computational load during inference.

VII. CONCLUSION AND FUTURE WORK

In this work, we introduced a multimodal face forgery detection framework under an FL paradigm to tackle the intertwined challenges of data privacy and model robustness. To preserve data privacy, the proposed framework employs a decentralized FL approach, enabling model training without the direct sharing of sensitive data. To enhance detection accuracy, the model innovates by integrating standard RGB images with noise residuals extracted via SRM. A dedicated RFF module effectively combines complementary information from both modalities. Experimental results demonstrate that the proposed model achieves an accuracy of 92.00% and an AUC of 97.69% on the FF++ dataset. Furthermore, cross-dataset evaluations on Celeb-DF and WildDeepfake demonstrate that the model exhibits robust generalization capabilities. Despite these promising results, we acknowledge certain limitations that will guide future research. Future efforts will be directed toward two primary goals: 1) improving the FL performance by incorporating personalized learning and adaptive aggregation to mitigate data heterogeneity; and 2) boosting the accuracy and efficiency of our real-time detection module.

REFERENCES

[1] W. Shahid et al., "Detecting and mitigating the dissemination of fake news: Challenges and future research opportunities," *IEEE Trans. Comput. Social Syst.*, vol. 11, no. 4, pp. 4649–4662, Aug. 2024.

[2] Q. Li, M. Gao, G. Zhang, and W. Zhai, "Defending deepfakes by saliency-aware attack," *IEEE Trans. Comput. Social Syst.*, vol. 11, no. 4, pp. 5060–5067, Aug. 2024.

[3] G. Zhang, M. Gao, Q. Li, S. Guo, and G. Jeon, "Detecting sequential deepfake manipulation via spectral transformer with pyramid attention in consumer IoT," *IEEE Trans. Consum. Electron.*, vol. 71, no. 2, pp. 6371–6380, May 2025.

[4] S. Xiao, G. Lan, J. Yang, Y. Li, and J. Wen, "Securing the socio-cyber world: Multiorder attribute node association classification for manipulated media," *IEEE Trans. Comput. Social Syst.*, vol. 11, no. 4, pp. 4809–4818, Aug. 2024.

[5] S. Guo, Q. Li, M. Gao, G. Zhang, J. Pan, and G. Jeon, "Deep learning-based face forgery detection for facial payment systems," *IEEE Consum. Electron. Mag.*, vol. 14, no. 3, pp. 80–86, May 2024.

[6] Q. Li, M. Gao, G. Zhang, W. Zhai, J. Chen, and G. Jeon, "Towards multimodal disinformation detection by vision-language knowledge interaction," *Inf. Fusion*, vol. 102, 2024, Art. no. 102037.

[7] T. Sobb, B. Turnbull, and N. Moustafa, "A holistic review of cyber–physical–social systems: New directions and opportunities," *Sensors*, vol. 23, no. 17, 2023, Art. no. 7391.

[8] Z. Amiri, A. Heidari, N. J. Navimipour, M. Unal, and A. Mousavi, "Adventures in data analysis: A systematic review of deep learning techniques for pattern recognition in cyber-physical-social systems," *Multimed. Tools Appl.*, vol. 83, no. 8, pp. 22909–22973, 2024.

[9] X. Zhou, W. Liang, I. Kevin, K. Wang, and S. Shimizu, "Multi-modality behavioral influence analysis for personalized recommendations in health social media environment," *IEEE Trans. Comput. Social Syst.*, vol. 6, no. 5, pp. 888–897, Oct. 2019.

[10] S. McCloskey and M. Albright, "Detecting GAN-generated imagery using saturation cues," in *Proc. IEEE Int. Conf. Image Process.*, Piscataway, NJ, USA: IEEE, 2019, pp. 4584–4588.

[11] S. Anwar and N. Barnes, "Real image denoising with feature attention," in *Proc. IEEE Int. Conf. Comput. Vis.*, 2019, pp. 3155–3164.

[12] J. Frank, T. Eisenhofer, L. Schönherr, A. Fischer, D. Kolossa, and T. Holz, "Leveraging frequency analysis for deep fake image recognition," in *Proc. Int. Conf. Mach. Learn.*, PMLR, 2020, pp. 3247–3258.

[13] G. Lan, S. Xiao, J. Wen, D. Chen, and Y. Zhu, "Data-driven deepfake forensics model based on large-scale frequency and noise features," *IEEE Intell. Syst.*, vol. 39, no. 1, pp. 29–35, Jan./Feb. 2024.

[14] T. Wang and K. P. Chow, "Noise based deepfake detection via multi-head relative-interaction," *Proc. AAAI*, vol. 37, no. 12, pp. 14548–14556, 2023.

[15] H. H. Nguyen, F. Fang, J. Yamagishi, and I. Echizen, "Multi-task learning for detecting and segmenting manipulated facial images and videos," in *Proc. 10th Int. Conf. Biometrics Theory, Appl. Syst. (BTAS)*, Piscataway, NJ, USA: IEEE, 2019, pp. 1–8.

[16] H. Zhao, W. Zhou, D. Chen, T. Wei, W. Zhang, and N. Yu, "Multi-attentional deepfake detection," in *Proc. IEEE Conf. Comput. Vis. Pattern Recog.*, 2021, pp. 2185–2194.

[17] I. Masi, A. Killekar, R. M. Mascarenhas, S. P. Gurudatt, and W. AbdAlmageed, "Two-branch recurrent network for isolating deepfakes in videos," in *Proc. Eur. Conf. Comput. Vis.*, Glasgow, U.K.: Springer, 2020, pp. 667–684.

[18] J. Cao, C. Ma, T. Yao, S. Chen, S. Ding, and X. Yang, "End-to-end reconstruction-classification learning for face forgery detection," in *Proc. IEEE Conf. Comput. Vis. Pattern Recog.*, 2022, pp. 4113–4122.

[19] G. Zhang, M. Gao, Q. Li, W. Zhai, and G. Jeon, "Multi-modal generative deepfake detection via visual-language pretraining with gate fusion for cognitive computation," *Cogn. Comput.*, vol. 16, no. 6, pp. 2953–2966, 2024.

[20] G. Zhang, Q. Li, M. Gao, and G. Jeon, "Towards sequential deepfake detection using deep learning for privacy protection," *IEEE Consum. Electron. Mag.*, vol. 14, no. 2, pp. 42–48, Mar. 2025.

[21] X. Zhou et al., "Information theoretic learning-enhanced dual-generative adversarial networks with causal representation for robust OOD generalization," *IEEE Trans. Neural Netw. Learn. Syst.*, vol. 36, no. 2, pp. 2066–2079, Feb. 2025.

[22] X. Zhou et al., "Reconstructed graph neural network with knowledge distillation for lightweight anomaly detection," *IEEE Trans. Neural Netw. Learn. Syst.*, vol. 35, no. 9, pp. 11817–11828, Sep. 2024.

[23] Z. Hu, H. Xie, L. Yu, X. Gao, Z. Shang, and Y. Zhang, "Dynamic-aware federated learning for face forgery video detection," *ACM Trans. Intell. Syst. Technol.*, vol. 13, no. 4, pp. 1–25, 2022.

[24] B. McMahan, E. Moore, D. Ramage, S. Hampson, and B. A. y Arcas, "Communication-efficient learning of deep networks from decentralized data," in *Proc. Int. Conf. Artif. Intell. Stat.*, PMLR, 2017, pp. 1273–1282.

[25] J. Fridrich and J. Kodovsky, "Rich models for steganalysis of digital images," *IEEE Trans. Inf. Forensics Secur.*, vol. 7, no. 3, pp. 868–882, Jun. 2012.

Authorized licensed use limited to: Shandong University of Technology. Downloaded on February 28,2026 at 11:37:31 UTC from IEEE Xplore. Restrictions apply.

This article has been accepted for inclusion in a future issue of this journal. Content is final as presented, with the exception of pagination.

[26] M. Fang et al., "STIDNet: Identity-aware face forgery detection with spatiotemporal knowledge distillation," *IEEE Trans. Comput. Social Syst.*, vol. 11, no. 4, pp. 5354–5366, Aug. 2024.

[27] S. Guo, Q. Li, M. Gao, X. Zhu, and I. Rida, "Generalizable deepfake detection via spatial kernel selection and halo attention network," *Image Vis. Comput.*, vol. 160, 2025, Art. no. 105582.

[28] X. Zhou et al., "Decentralized federated graph learning with lightweight zero trust architecture for next-generation networking security," *IEEE J. Sel. Areas Commun.*, vol. 43, no. 6, pp. 1908–1922, Jun. 2025.

[29] X. Zhou et al., "Hierarchical federated learning with social context clustering-based participant selection for internet of medical things applications," *IEEE Trans. Comput. Social Syst.*, vol. 10, no. 4, pp. 1742–1751, Aug. 2023.

[30] X. Zhou et al., "Personalized federated learning with model-contrastive learning for multi-modal user modeling in human-centric metaverse," *IEEE J. Sel. Areas Commun.*, vol. 42, no. 4, pp. 817–831, Apr. 2024.

[31] X. Zhou et al., "Decentralized P2P federated learning for privacy-preserving and resilient mobile robotic systems," *IEEE Wireless Commun.*, vol. 30, no. 2, pp. 82–89, Apr. 2023.

[32] A. Reisizadeh, A. Mokhtari, H. Hassani, A. Jadbabaie, and R. Pedarsani, "FedPAQ: A communication-efficient federated learning method with periodic averaging and quantization," in *Proc. Int. Conf. Artif. Intell. Stat*., PMLR, 2020, pp. 2021–2031.

[33] K. Wei et al., "Federated learning with differential privacy: Algorithms and performance analysis," *IEEE Trans. Inf. Forensics Secur.*, vol. 15, pp. 3454–3469, 2020.

[34] H. Wang, M. Yurochkin, Y. Sun, D. Papailiopoulos, and Y. Khazaeni, "Federated learning with matched averaging," 2020, *arXiv:2002.06440*.

[35] T.-M. H. Hsu, H. Qi, and M. Brown, "Measuring the effects of non-identical data distribution for federated visual classification," 2019, *arXiv:1909.06335*.

[36] J. Wang, Q. Liu, H. Liang, G. Joshi, and H. V. Poor, "Tackling the objective inconsistency problem in heterogeneous federated optimization," in *Proc. Adv. Neural Inf. Process. Syst*., vol. 33, 2020, pp. 7611–7623.

[37] X. Zhou et al., "Federated distillation and blockchain empowered secure knowledge sharing for internet of medical things," *Inf. Sci.*, vol. 662, 2024, Art. no. 120217.

[38] X. Zhou, W. Liang, A. Kawai, K. Fueda, J. She, and K. I.-K. Wang, "Adaptive segmentation enhanced asynchronous federated learning for sustainable intelligent transportation systems," *IEEE Trans. Intell. Transp. Syst.*, vol. 25, no. 7, pp. 6658–6666, Jul. 2024.

[39] Q. V. Khanh, A. Chehri, A. D. Van, and Q. N. Minh, "Federated learning approach for collaborative and secure smart healthcare applications," *IEEE Trans. Emerg. Top. Comput. Intell.*, vol. 13, no. 1, pp. 68–79, Jan./Mar. 2025.

[40] X. Zhou et al., "Spatial–temporal federated transfer learning with multi-sensor data fusion for cooperative positioning," *Inf. Fusion*, vol. 105, 2024, Art. no. 102182.

[41] L. Teng et al., "FLPK-BiSeNet: Federated learning based on priori knowledge and bilateral segmentation network for image edge extraction," *IEEE Trans. Netw. Serv. Manage.*, vol. 20, no. 2, pp. 1529–1542, Jun. 2023.

[42] X. Zhou et al., "Digital twin enhanced federated reinforcement learning with lightweight knowledge distillation in mobile networks," *IEEE J. Sel. Areas Commun.*, vol. 41, no. 10, pp. 3191–3211, Oct. 2023.

[43] J. Miao, Z. Yang, L. Fan, and Y. Yang, "FedSeg: Class-heterogeneous federated learning for semantic segmentation," in *Proc. IEEE Conf. Comput. Vis. Pattern Recog.*, 2023, pp. 8042–8052.

[44] M. J. Idrissi et al., "Fed-ANIDS: Federated learning for anomaly-based network intrusion detection systems," *Expert Syst. Appl.*, vol. 234, 2023, Art. no. 121000.

[45] F. Chollet, "Xception: Deep learning with depthwise separable convolutions," in *Proc. IEEE Conf. Comput. Vis. Pattern Recog.*, 2017, pp. 1251–1258.

[46] S. Chen, T. Yao, Y. Chen, S. Ding, J. Li, and R. Ji, "Local relation learning for face forgery detection," *Proc. AAAI*, vol. 35, no. 2, pp. 1081–1088, 2021.

[47] J. Fei, Y. Dai, P. Yu, T. Shen, Z. Xia, and J. Weng, "Learning second order local anomaly for general face forgery detection," in *Proc. IEEE Conf. Comput. Vis. Pattern Recog.*, 2022, pp. 20270–20280.

[48] A. Rossler, D. Cozzolino, L. Verdoliva, C. Riess, J. Thies, and M. Nießner, "FaceForensics++: Learning to detect manipulated facial images," in *Proc. IEEE Int. Conf. Comput. Vis.*, 2019, pp. 1–11.

[49] Y. Li, X. Yang, P. Sun, H. Qi, and S. Lyu, "Celeb-DF: A large-scale challenging dataset for deepfake forensics," in *Proc. IEEE Conf. Comput. Vis. Pattern Recog.*, 2020, pp. 3207–3216.

[50] B. Zi, M. Chang, J. Chen, X. Ma, and Y.-G. Jiang, "WildDeepfake: A challenging real-world dataset for deepfake detection," in *Proc. ACM Int. Conf. Multimedia*, 2020, pp. 2382–2390.

[51] J. Deng, J. Guo, E. Ververas, I. Kotsia, and S. Zafeiriou, "RetinaFace: Single-shot multi-level face localisation in the wild," in *Proc. IEEE Conf. Comput. Vis. Pattern Recognit.*, 2020, pp. 5203–5212.

[52] D. Afchar, V. Nozick, J. Yamagishi, and I. Echizen, "MesoNet: A compact facial video forgery detection network," in *Proc. WIFS*, Piscataway, NJ, USA: IEEE, 2018, pp. 1–7.

[53] H. Liu et al., "Spatial-phase shallow learning: Rethinking face forgery detection in frequency domain," in *Proc. IEEE Conf. Comput. Vis. Pattern Recog.*, 2021, pp. 772–781.

[54] C. Wang and W. Deng, "Representative forgery mining for fake face detection," in *Proc. IEEE Conf. Comput. Vis. Pattern Recog.*, 2021, pp. 14923–14932.

[55] J. Li, H. Xie, J. Li, Z. Wang, and Y. Zhang, "Frequency-aware discriminative feature learning supervised by single-center loss for face forgery detection," in *Proc. IEEE Conf. Comput. Vis. Pattern Recog.*, 2021, pp. 6458–6467.

[56] L. Li et al., "Face x-ray for more general face forgery detection," in *Proc. IEEE Conf. Comput. Vis. Pattern Recog.*, 2020, pp. 5001–5010.

[57] J. Tian et al., "Learning to discover forgery cues for face forgery detection," *IEEE Trans. Inf. Forensics Secur.*, vol. 19, pp. 3814–3828, 2024.

[58] D. Zhang, J. Chen, X. Liao, F. Li, J. Chen, and G. Yang, "Face forgery detection via multi-feature fusion and local enhancement," *IEEE Trans. Circuits Syst. Video Technol.*, vol. 34, no. 9, pp. 8972–8977, Sep. 2024.

[59] Y. Qian, G. Yin, L. Sheng, Z. Chen, and J. Shao, "Thinking in frequency: Face forgery detection by mining frequency-aware clues," in *Proc. Eur. Conf. Comput. Vis*., Springer, 2020, pp. 86–103.

[60] M. Tan and Q. Le, "EfficientNet: Rethinking model scaling for convolutional neural networks," in *Proc. Int. Conf. Mach. Learn*., vol. 97, PMLR, 2019, pp. 6105–6114.

Authorized licensed use limited to: Shandong University of Technology. Downloaded on February 28,2026 at 11:37:31 UTC from IEEE Xplore. Restrictions apply.