OUTLINE

- **Voltage and Current Division**
- **Kirchhoff's Law**
  - **THE SINGLE-LOOP CIRCUIT**
  - **THE SINGLE-NODE-PAIR CIRCUIT**
- **Series And Parallel Connected Sources with Kirchhoff's Law**

VOLTAGE AND CURRENT DIVISION

Voltage Division Rule, By combining resistances and sources, have been found one method of shortening the work of analyzing a circuit. Another useful shortcut is the application of the ideas of voltage and current division. Voltage division is used to express the voltage across one of several series resistors in terms of the voltage across the combination. In Fig. below, the voltage across *R*2 is found via KVL and Ohm's law:

$$v = v_1 + v_2 = iR_1 + iR_2 = i(R_1 + R_2)$$

so

$$i = \frac{v}{R_1 + R_2}$$

Thus,

$$v_2 = iR_2 = \left(\frac{v}{R_1 + R_2}\right) R_2$$

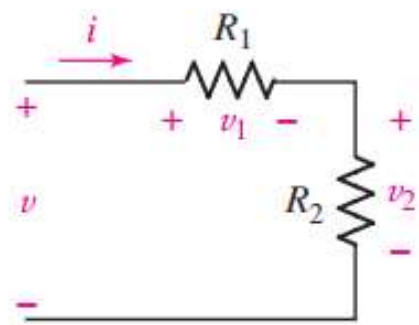

FIGURE 3.34 An illustration of voltage division.

or

$$v_2 = \frac{R_2}{R_1 + R_2} v$$

and the voltage across R_1 is, similarly,

$$v_1 = \frac{R_1}{R_1 + R_2} v$$

Example,

Determine the voltage V1 and V3 and V' for the series circuit below, using the voltage divider rule.

$$V = \frac{E\,R_1}{R_t}$$

$$R_t = R_1 + R_2 + R_3$$

$$= \frac{45 \times 2 \times 10^3}{2 \times 10^3 + 5 \times 10^3 + 8 \times 10^3}$$

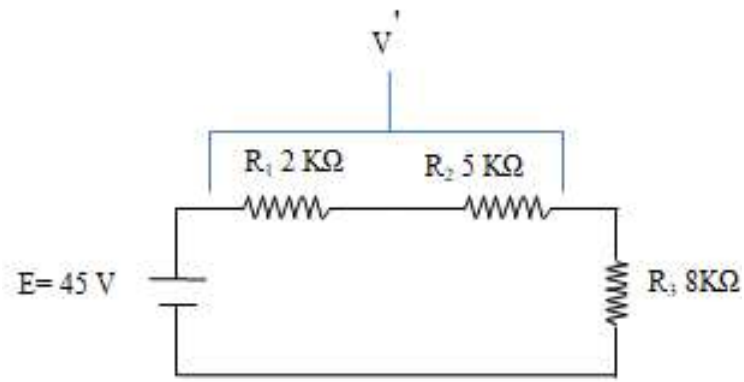

$$V1 = \frac{90}{15} = 6v$$

$$V3 = \frac{ER_3}{Et} = \frac{45 \times 8 \times 10^3}{15 \times 10^3} = \frac{360}{15} = 24v$$

$$V' = \frac{E\,(R_1 + R_2)}{R_t} = \frac{45(2x\,10^3 + 5\,x10^3)}{15x\,10^3} = \frac{315}{15}$$

$$V' = 21v$$

Current Divider Rule (CDR),

CDR is used to determine the currents entering in parallel branches.

We are now given a total current supplied to several parallel resistors, as shown in the circuit:

$$i_2 = \frac{v}{R_2} = \frac{i(R_1 \| R_2)}{R_2} = \frac{i}{R_2}\frac{R_1 R_2}{R_1 + R_2}$$

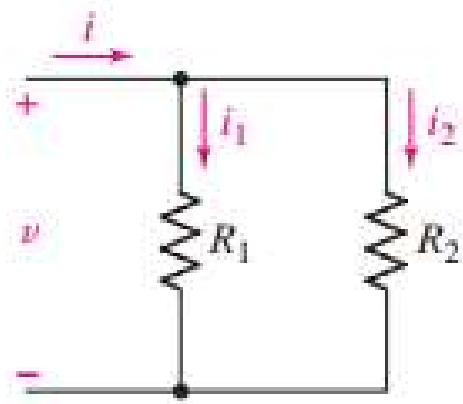

FIGURE An illustration of current division.

or

$$\boxed{i_2 = i\frac{R_1}{R_1 + R_2}}$$

and, similarly,

$$\boxed{i_1 = i\frac{R_2}{R_1 + R_2}}$$

Example,

Find the value of the currents I_1 and I_2 for the network below.

Using the current divider rule:

$$I1 = R2\ I / (R1 + R2)$$

$$I1 = 4 * 12 / (2 + 4)$$

$$I1 = 8\ A$$

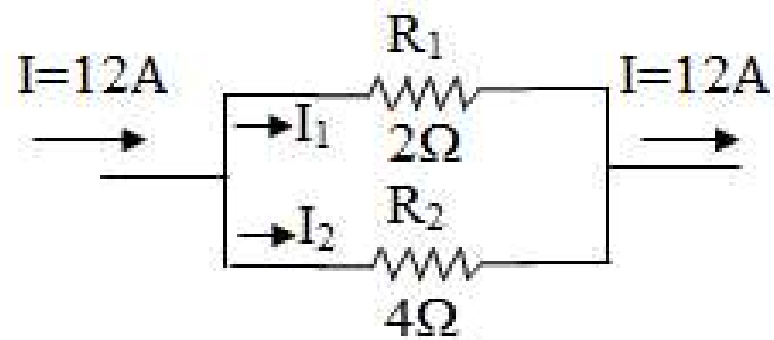

SO,

$$I2 = I - I1 = 12 - 8 = 4\ A$$

Example,

Determine the resistance R1 in the cct. Below:

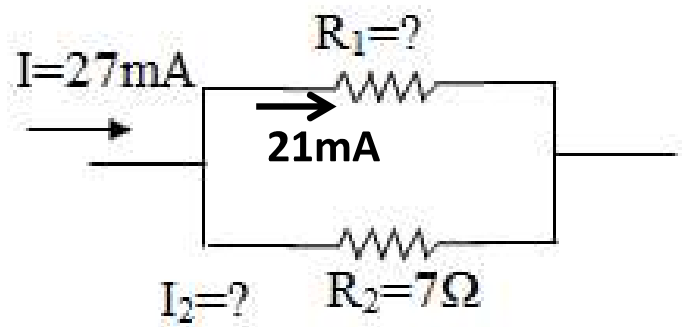

$I2 = I - I1 = 27 - 21 = 6\ m\ A$

$V1 = V2 = I2\ R2$

$V1 = 6 \times 7 = 42\ m\ V$

$V1 = I1\ R1 \quad , R1 = V1 / I1 = 42 / 21 = 2\ \Omega$

Or:

By current divider rule:

$I1 = R2\ I / R1 + R2$

$21 \times 10^{-3} = 7 \times 27 \times 10^{-3} / R1 + 7 \rightarrow$

$21 \times 10^{-3}\ R1 + 147 \times 10^{-3} = 189 \times 10$

$R1 = (189 - 147) \times 10^{-3} / 21 \times 10^{-3} \quad = 42 / 21 = 2\ \Omega$

HOMEWORK,

For the circuit of the Fig. below, calculate the voltage *vx*.

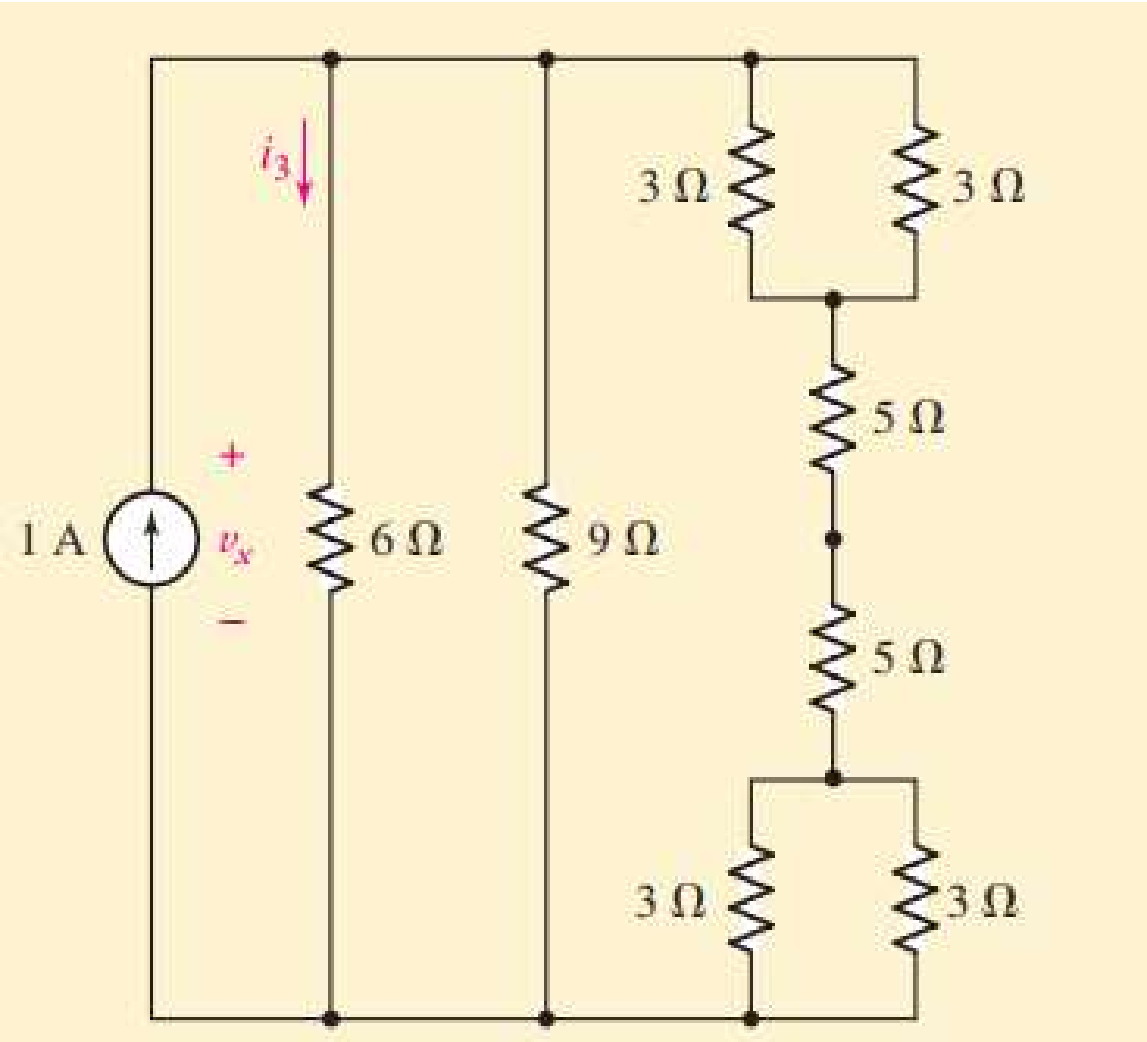

Ans. : 2.819 V

Kirchhoff's Law

- In the previous chapter we were introduced to independent voltage and current sources, dependent sources, and resistors.
- We discovered that dependent sources come in varieties and are controlled by a voltage or current which exists elsewhere. Once we know the voltage across a resistor, we know its current (and vice versa).
- But in case of the many Sources, circuits must be analyzed to determine a complete set of voltages and currents. This can be done with only two simple laws are needed in addition to Ohm's law. Kirchhoff's current law (KCL) and Kirchhoff's voltage law (KVL), and they are simply restatements of charge and energy conservation, respectively.

KIRCHHOFF'S CURRENT LAW

KCL is the algebraic sum of the currents entering any node is zero.

$\sum I = 0$

$\sum I$ entering = $\sum I$ leaving

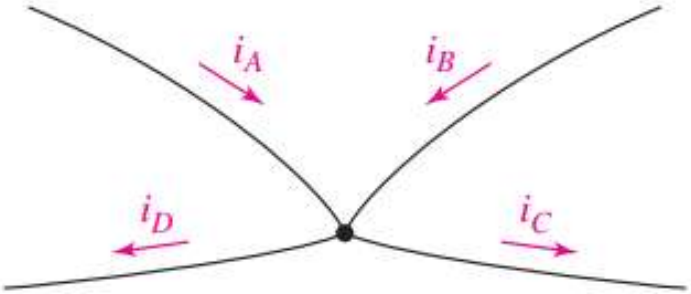

FIGURE 3.2 Example node to illustrate the application of Kirchhoff's current law.

- Consider the node shown in Fig. 3.2. The algebraic sum of the four currents entering the node must be zero: $i_A + i_B + (-i_C) + (-i_D) = 0$
- However, the law could be equally well applied to the algebraic sum of the currents leaving the node: $(-i_A) + (-i_B) + i_C + i_D = 0$
- We might also wish to equate the sum of the currents having reference arrows directed into the node to the sum of those directed out of the node: $i_A + i_B = i_C + i_D$
- which simply states that the sum of the currents going in must equal the sum of the currents going out.

Example,

Find the current in each section in the network below.

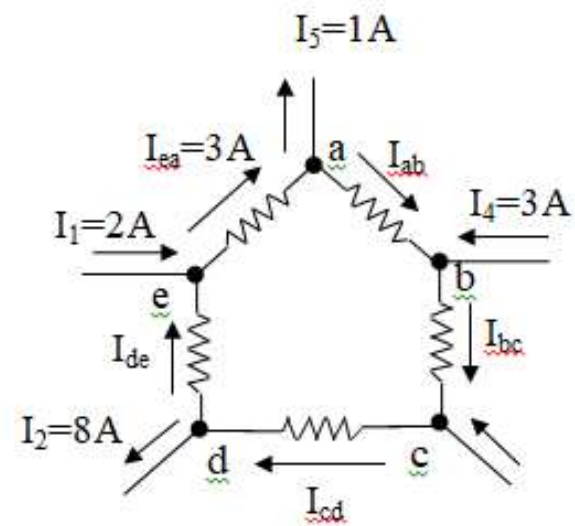

$$\sum I \text{ entering} = \sum I \text{ leaving}$$

At junction (a):

$$Iea = I5 + Iab$$

$$3 = 1 + Iab$$

$$Iab = 2 \text{ A}$$

At junction (b) :

$$Iab + I4 = Ibc$$

$$2 + 3 = Ibc$$

$$Ibc = 5 \text{ A}$$

At junction (c) :

$$Ibc + I3 = Icd$$

$$5 + 4 = Icd$$

$$Icd = 9 \text{ A}$$

At junction (d) :

$$Icd = I2 + Ide$$

$$9 = 8 + Ide$$

$$Ide = 1 \text{ A}$$

At junction (e) :

$$Ide + I1 = Iea$$

Class Activity,

Determine the currents I3 and I5 by using KCL.

$$\sum I \text{ entering} = \sum I \text{ leaving}$$

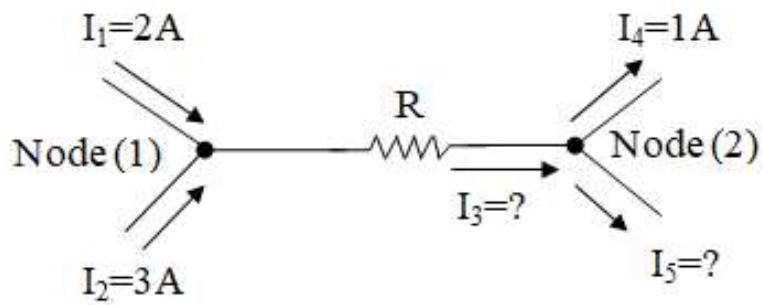

At node (1):

$$I1 + I2 = I3$$

$$2 + 3 = I3$$

$$I3 = 5 \text{ A}$$

At node (2):

$$I3 = I4 + I5$$

$$5 = 1 + I5$$

Kirchhoff's Voltage Law

Kirchhoff's voltage law (KVL), is that the algebraic sum the potential rises and drops around a closed loop (path) is Zero.

$$\boxed{\sum \sigma V = 0}$$

Kirchhoff's law in symbolic form

$$\sum \sigma Vrises - \sum \sigma Vdrops = 0$$

$$\boxed{\sum \sigma Vrises = \sum \sigma Vdrops}$$

By applying KVL:

$+E - V_1 - V_2 = 0$

$E = V_1 + V_2$

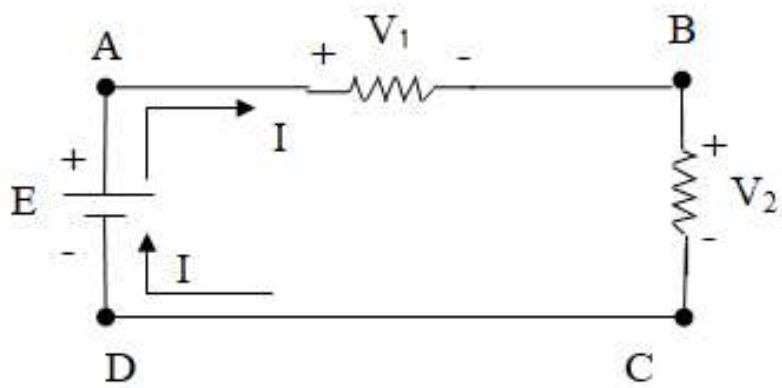

The potential impressed on the cct. By the Battery (V rise) is equal to the potential (V drop) around a closed loop within the cct .

EXAMPLE, In the circuit of Fig. below, find *Vx* and *ix*.

Hint, KVL can be applied immediately to obtain *Vx*.

Beginning with the bottom node of the 5 V source, we apply KVL clockwise around the loop:

$$-5 - 7 + vx = 0$$

so, $vx = 12$ V

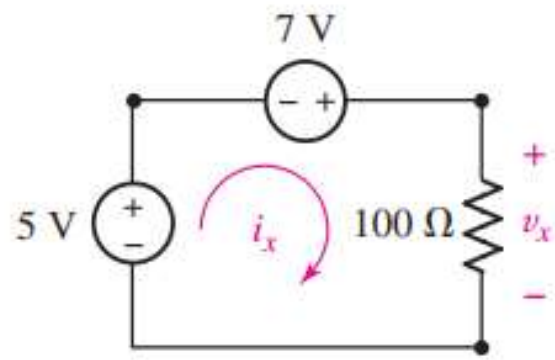

FIGURE A simple circuit with two voltage sources and a single resistor.

Note, KCL applies to this circuit, but only tells us that the same current (*ix*) flows through all three elements.

Invoking Ohm's law,

$$ix = vx/100 = 12 / 100$$

$$A = 120 \text{ mA}$$

CLASS ACTIVITY

Determine *ix* and *Vx* in the circuit of the following Fig.

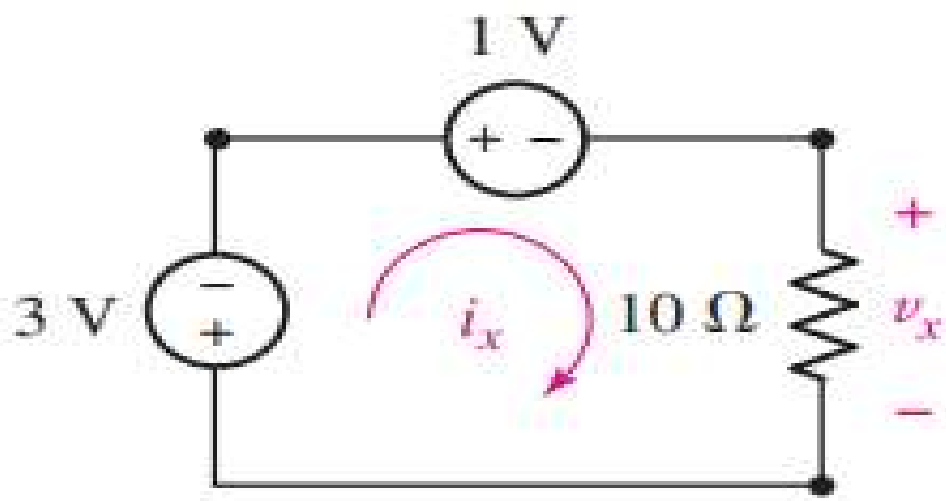

FIGURE

Ans: *vx* = - 4 V; *ix* = - 400 mA

EXAMPLE, **In the circuit of the Fig. below there are eight circuit elements. Find *VR*2 (the voltage across *R*2) and the voltage labeled *Vx*.**

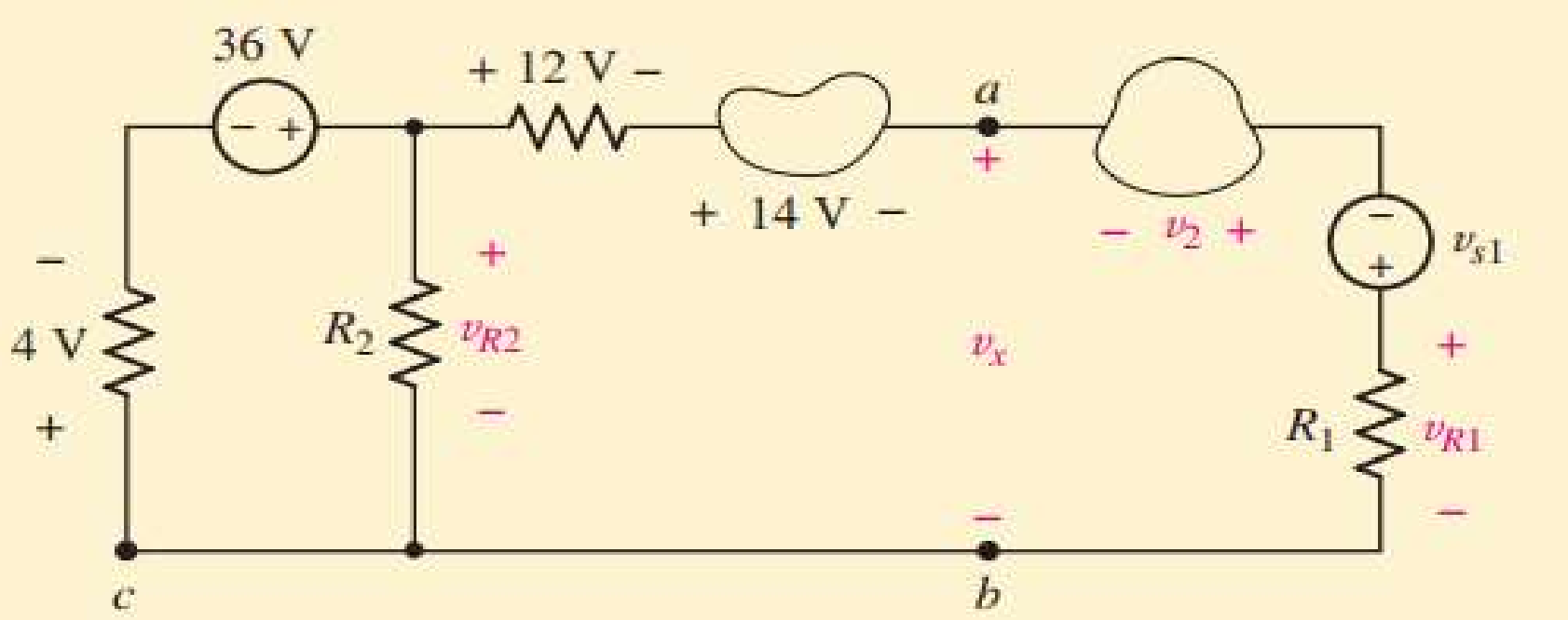

FIGURE A circuit with eight elements for which we desire v_{R2} and v_x.

Solv,

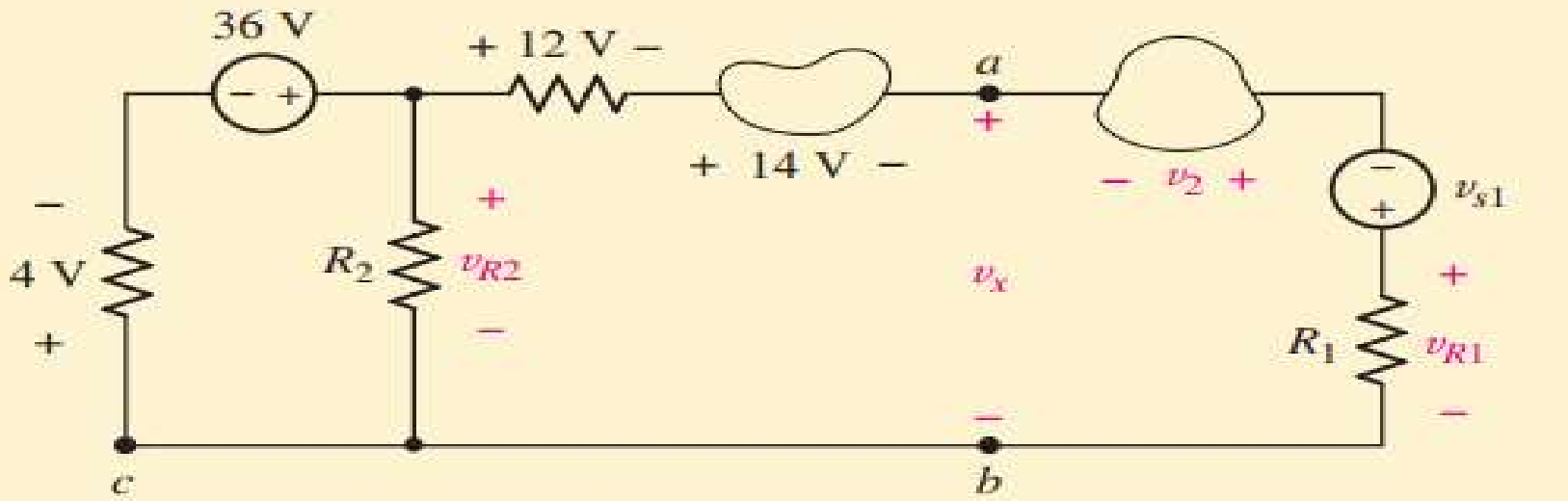

FIGURE A circuit with eight elements for which we desire v_{R2} and v_x.

by writing a KVL equation around the loop on the left, starting at point *c*: **4 - 36 + *vR*2 = 0**

so, ***vR*2 = 32 V**

To find *vx* , apply KVL beginning at point *c* :

+4 - 36 + 12 + 14 + *vx* = 0

so that ***vx* = 6 V**

An alternative approach: Knowing *vR*2, we might have taken the shortcut through *R*2: **-32 + 12 + 14 + *vx* = 0**

yielding ***vx* = 6 V**

EXAMPLE, **Determine *Vx* in the circuit of Fig. below.**

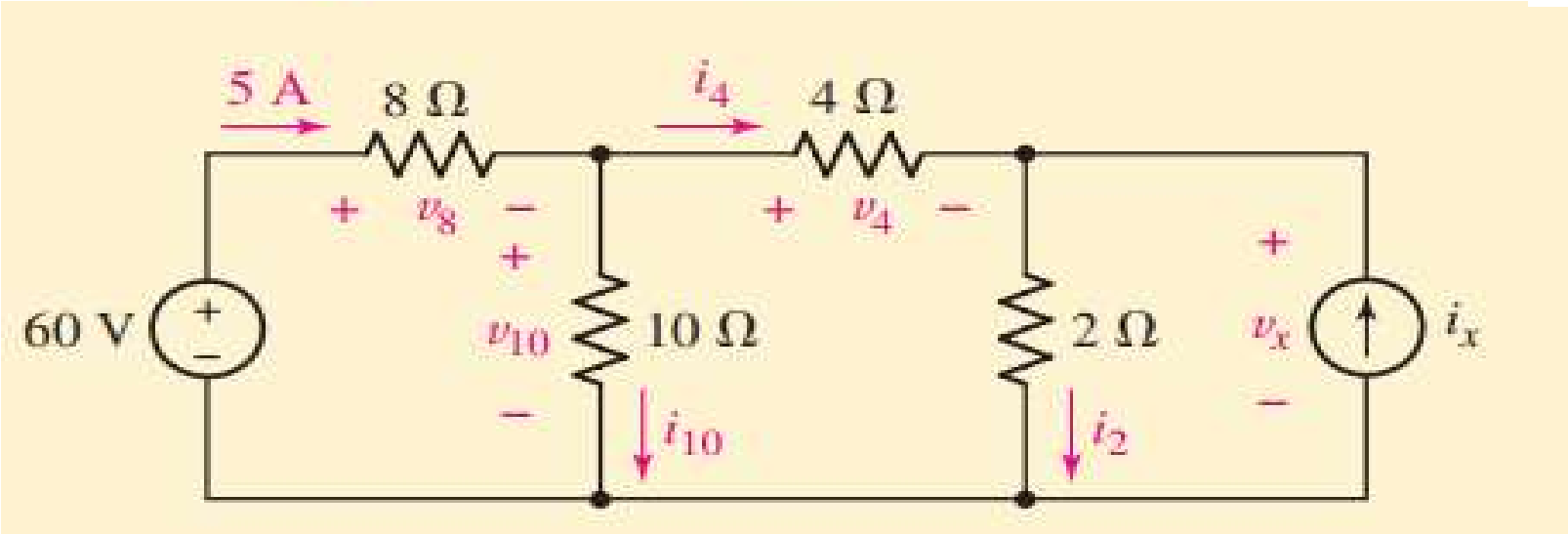

- **begin by labeling voltages and currents on the rest of the elements in the circuit!**

Apply KVL: from loop1, **-60 + *v*8 + *v*10 = 0 …** [1]

and from loop2, **-*v*10 + *v*4 + *Vx* = 0 …** [2]

Using Ohm's law, **V8= IR = 5 *8 = 40V**

Replace in 1st eq., ***v* 10 = 60 - 40 = 20 V**

so, eq.2: ***Vx* = *v* 10 - *v*4**

***Vx* = *20* - *v*4 …..** [3]

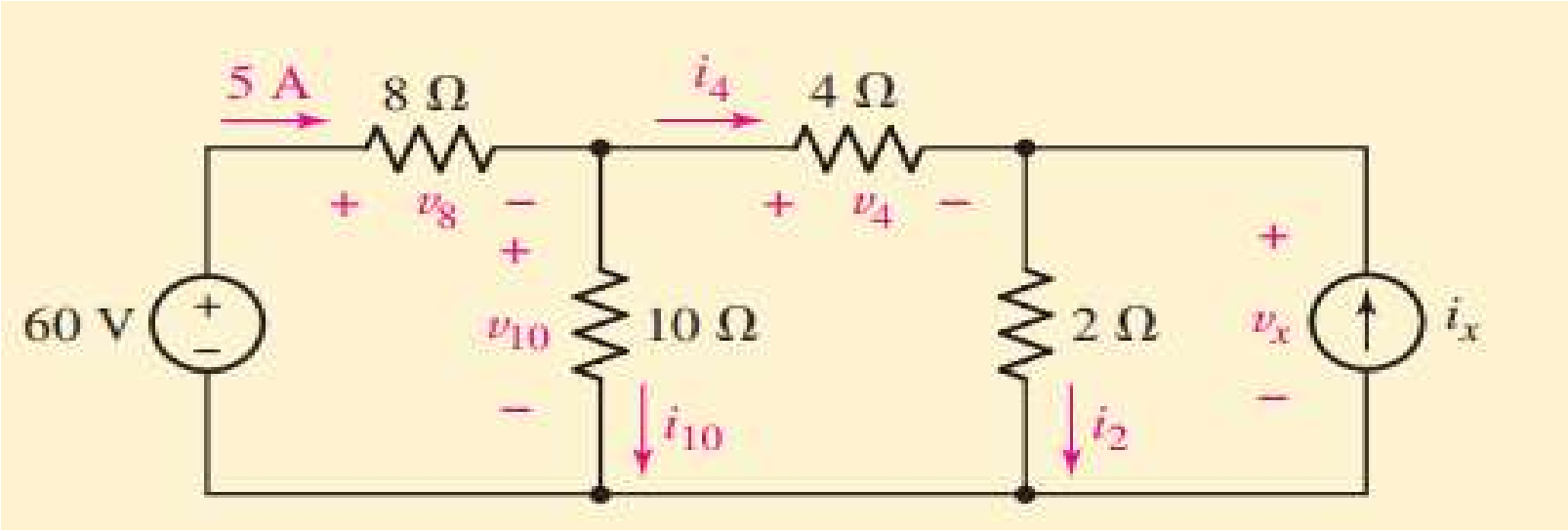

Employ Ohm's law, which requires a value for i_4, with KCL in node a,

$$I_T = I_4 + I_{10}$$

$$5 = I_4 + V_{10} / 10$$

From KCL,

$$i_4 = 5 - i_{10} = 5 - v_{10}/10$$

$$= 5 - 20/ 10 = 3$$

so that

$$v_4 = I*R_4 = 3*4 = 12V$$

Hence from eq[3],

$$v_x = 20 - 12 = 8 \text{ V}$$

THE SINGLE-LOOP CIRCUIT

EXAMPLE, Compute the Power Absorbed in each element for the circuit shown in Fig.

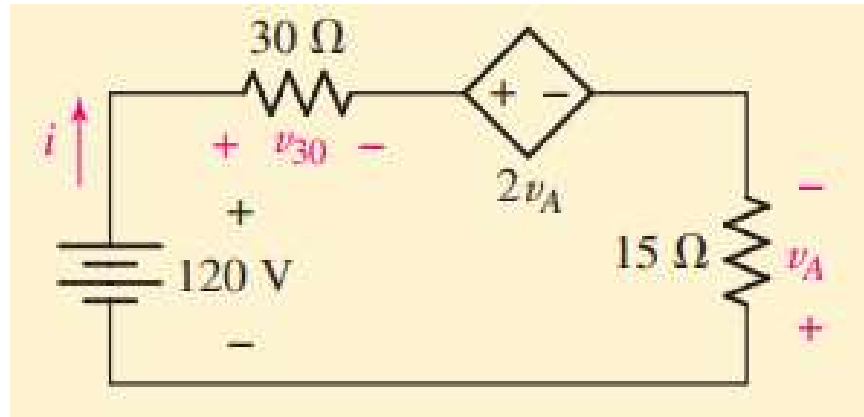

applying KVL around the loop:

$$-120 + v30 + 2vA - vA = 0 \quad \text{...[1]}$$

Using Ohm's law to introduce the known resistor values:

$$v30 = 30i \text{ and } vA = -15i$$

Substituting into Eq. [1] yields,

$$-120 + 30i - 30i + 15i = 0$$

$$i = 8 \text{ A}$$

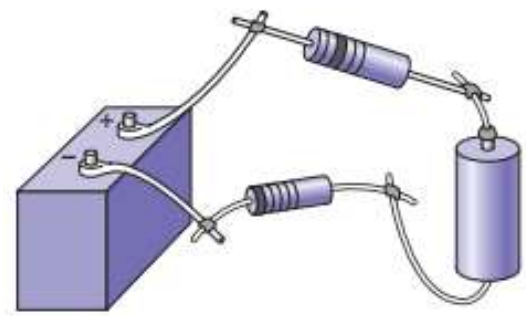

Computing the power *absorbed* by each element:

$$p120v = (120)*(-8) = -960 \text{ W}$$

$$p30 = (8^2)*(30) = 1920 \text{ W}$$

$$p\,dep = (2vA)*(8) = 2[(-15)*(8)](8)$$

$$= -1920 \text{ W}$$

$$p15 = (8^2)*(15) = 960 \text{ W}$$

THE SINGLE-NODE-PAIR CIRCUIT

The companion of the single-loop circuit discussed in previously is the single node-pair circuit, in which any number of simple elements are connected between the same pair of nodes.

An example of such a circuit is shown in the Fig. below KVL forces us to recognize that the voltage across each branch is the same as that across any other branch. *Elements in a circuit having a common voltage across them are said to be connected in* ***parallel.***

EXAMPLE, Find the voltage, current, and power associated with each element in the circuit of Fig.

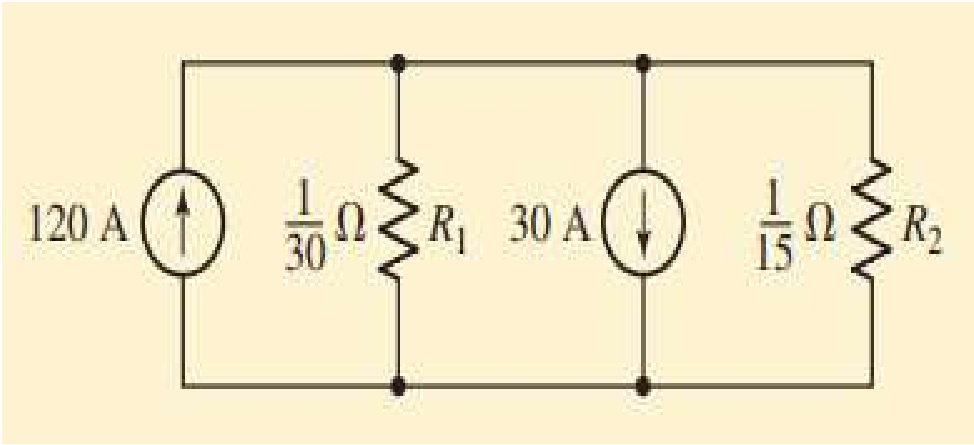

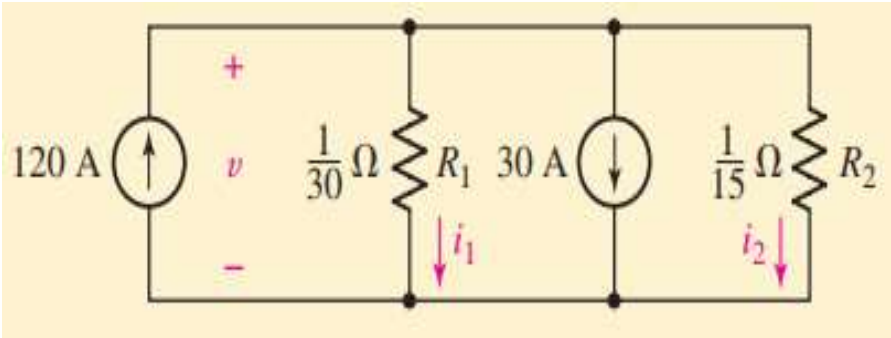

apply KCL to either of the two nodes in the bottom of the circuit,

−120 + i1 + 30 + i2 = 0

Writing both currents in terms of the voltage v using Ohm's law

i_1 = 30*v and i_2 = 15*v

we obtain

−120 + 30v + 30 + 15v = 0

Solving this equation for v results in, **v = 2 V**

and invoking Ohm's law then gives **i1 = 60 A and i2 = 30 A**

Now the power absorbed for the two resistors,

P_{R1} = v^2/R = 30*(2^2) = 120 W and P_{R2} = 15 *(2^2) = 60 W

And the power absorbed for the two sources,

p120A = V*I = 120*(−2) = −240 W and p30A = 30*(2) = 60 W

SERIES AND PARALLEL CONNECTED SOURCES

It turns out that some of the equation writing that we have been doing for series and parallel circuits can be avoided by combining sources.

Note, however, that all the current, voltage, and power relationships in the remainder of the circuit will be unchanged.

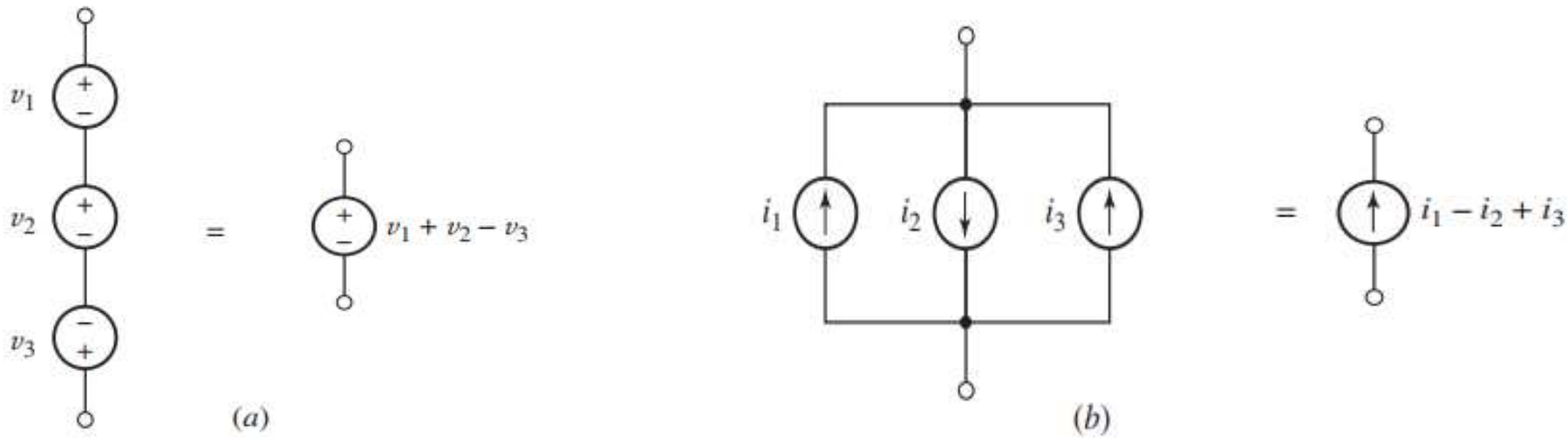

FIGURE (*a*) Series-connected voltage sources can be replaced by a single source. (*b*) Parallel current sources can be replaced by a single source.

EXAMPLE, Determine the current *i* in the circuit of following Fig. by first combining the sources into a single equivalent voltage source.

Starting from the bottom left-hand corner and proceeding clockwise,

$$-3 - 9 - 5 + 1 = -16 \text{ V}$$

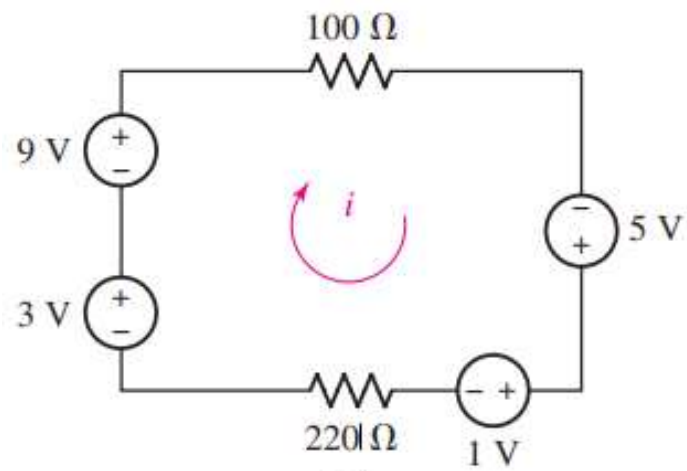

(a)

KVL combined with Ohm's law then yields

$$-16 + 100i + 220i = 0$$

or

$$i = 16/320 = 50 \text{ mA}$$

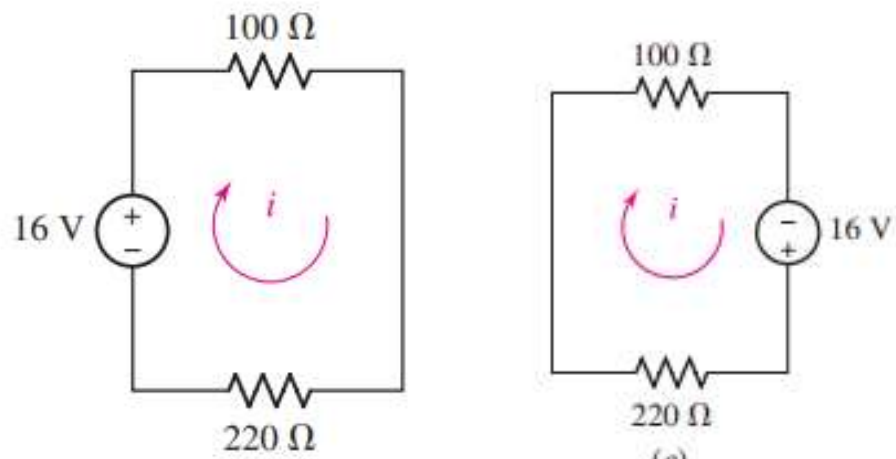

(b) (c)

EXAMPLE, Determine the voltage *v* in the circuit of the Fig. bellow by first combining the sources into a single equivalent current source.

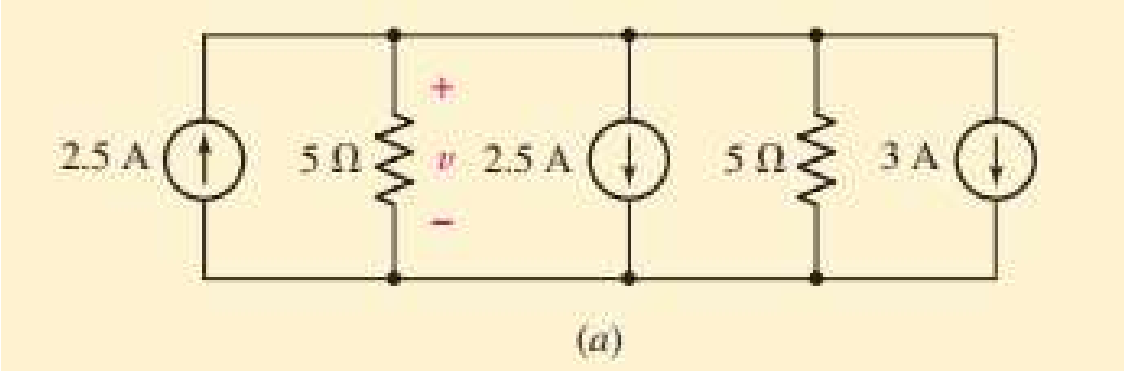

(a)

The sources may be combined if the same voltage appears across each one, by adding the currents that flow from the top side of the circuit:

2.5 - 2.5 - 3 = -3 A

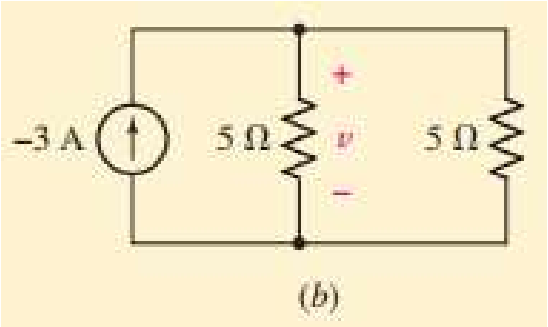

(b)

One equivalent circuit is shown in Fig. 3.22*b*. KCL then allows us to write:

$-3 + v/5 + v/5 = 0$

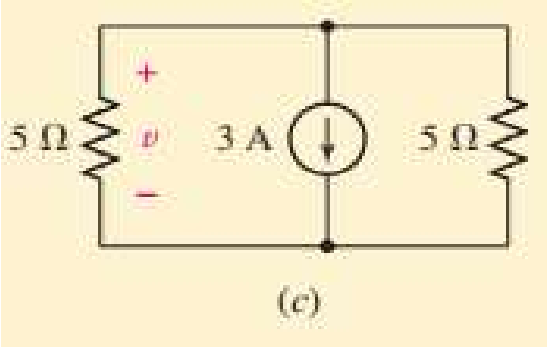

(c)

Solving, we find $v = 7.5$ V.

Another equivalent circuit is shown in Fig. 3.22*c*.

Example, Use resistance and source combinations to determine the current *I* in Fig. 3.27*a* and the power delivered by the 80 V source.

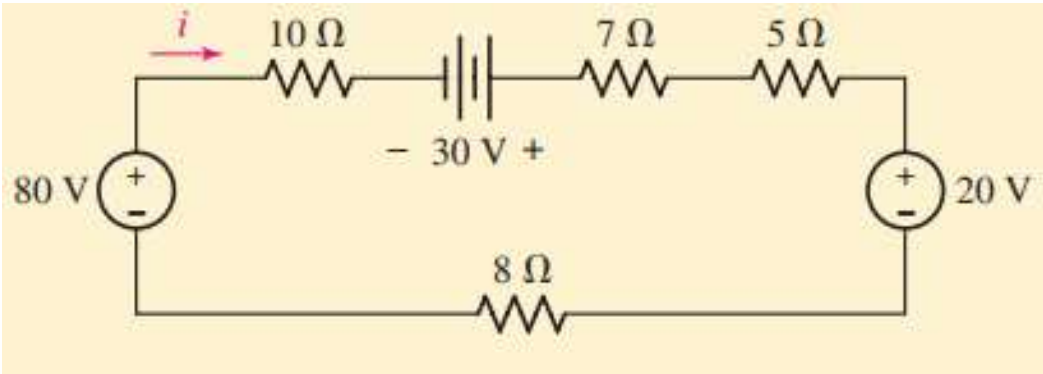

Apply serial connection analysis for both voltage courses and resistors using KVL:

$$-80 + 10i - 30 + 7i + 5i + 20 + 8i = 0$$

we have simply, $-90 + 30i = 0$

and so we find that, $i = 3$ A

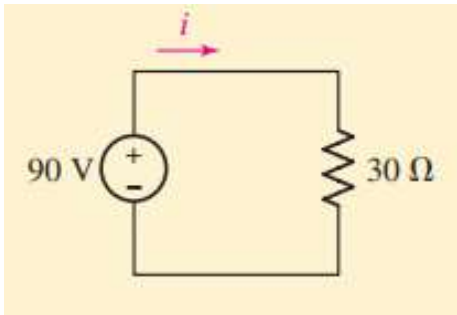

The desired power delivered to the circuit by the 80 V is,

$$80 \text{ V} \times 3 \text{ A} = 240 \text{ W}$$

CHECK POINT,
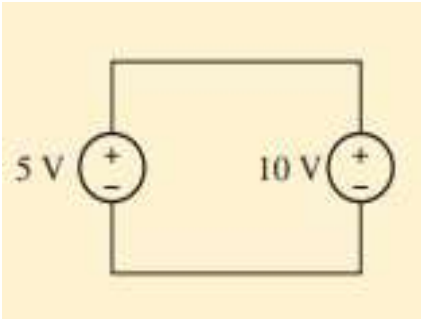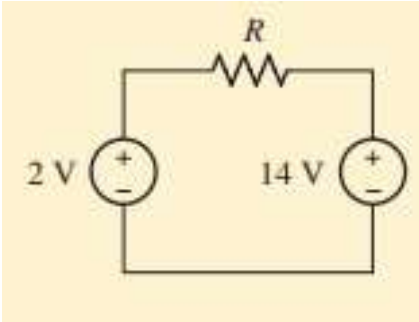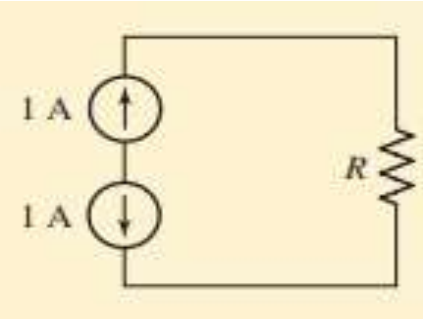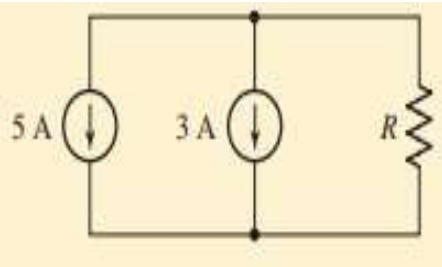
Determine which of the circuits of the Figs. Below are valid.