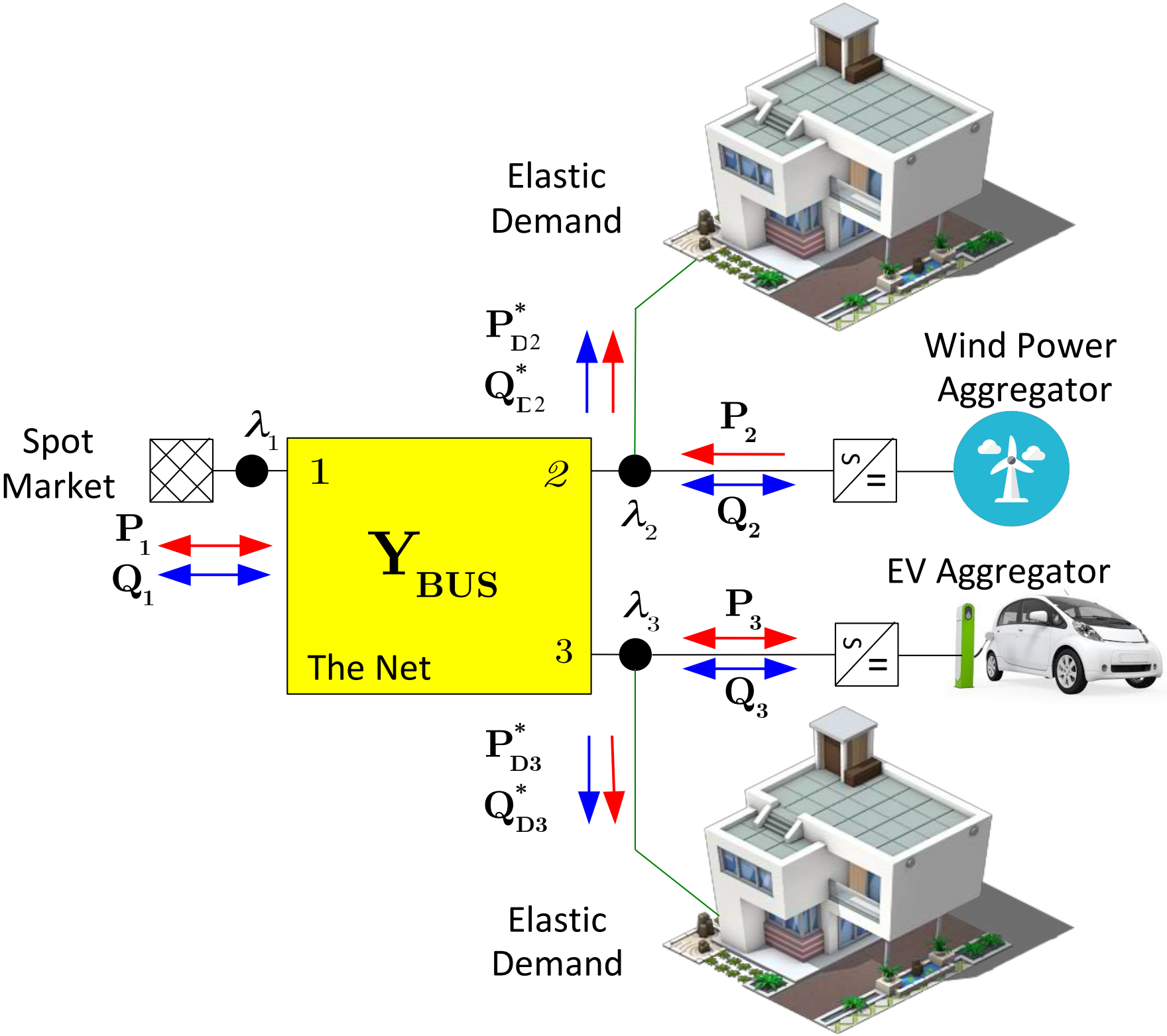
Elastic
Demand
$P^*_{D2}$
$Q^*_{D2}$
Wind Power
Aggregator
$P_2$
$Q_2$
$\lambda_2$
Spot
Market
$\lambda_1$
$P_1$
$Q_1$
1
2
3
$Y_{BUS}$
The Net
$\lambda_3$
$P_3$
$Q_3$
EV Aggregator
$P^*_{D3}$
$Q^*_{D3}$
Elastic
Demand