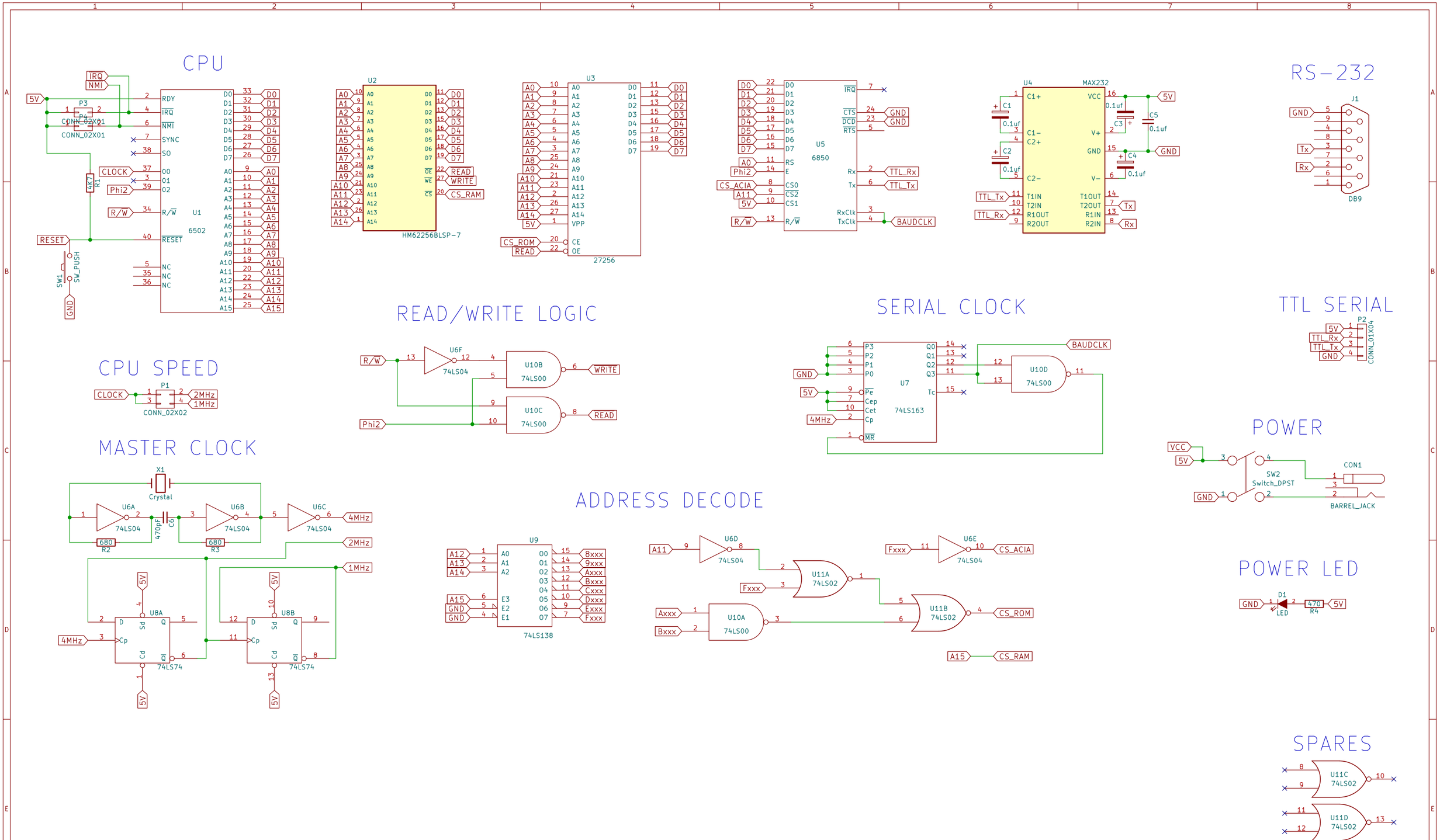

STATUS: Schematic/PCB Complete

Micro UK101

Design by Grant Searle
Steve J. Gray

Sheet: /
File: MicroUK101.kicad_sch

Title: Micro UK101 with mods

Size: A3	Date: 2022-04-19	**Rev: 1.0**
KiCad E.D.A. kicad (6.0.2)		Id: 1/1