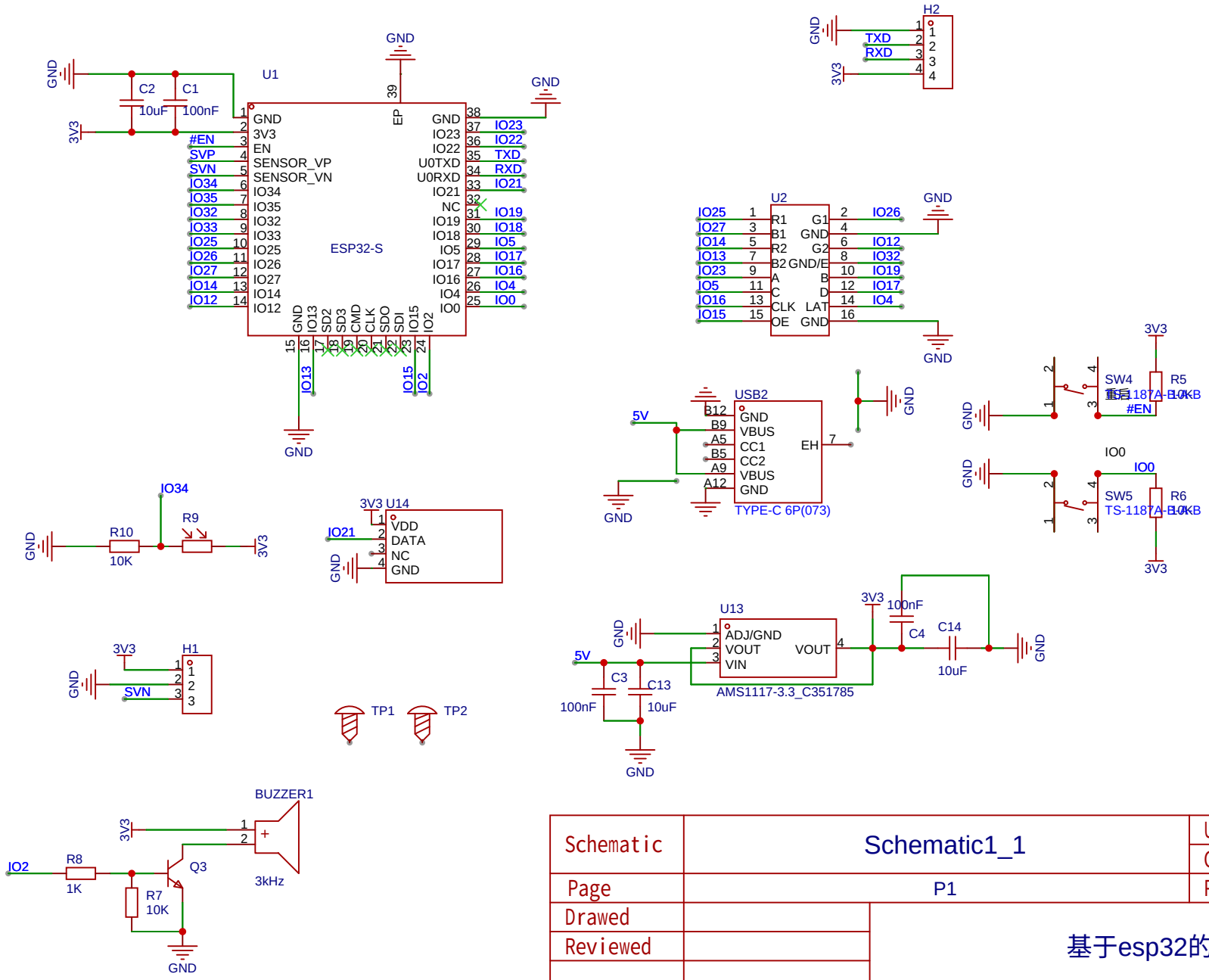

Schematic	Schematic1_1	Update Date	2024-06-26
		Create Date	2024-06-26
Page	P1	Part Number	
Drawed		基于esp32的led显示屏时钟	
Reviewed			
		VER	SIZE	PAGE 1 OF 1
嘉立创EDA		V1.0	A0	嘉立创EDA