1.1 About the protocol

AMBA AHB is a bus interface suitable for high-performance synthesizable designs.

It defines the interface between components, such as Managers, interconnects, and Subordinates.

AMBA AHB implements the features required for high-performance, high clock frequency systems including:

- Burst transfers
- Single clock-edge operation
- Non-tristate implementation
- Configurable data bus widths
- Configurable address bus widths

The most common AHB Subordinates are internal memory devices, external memory interfaces, and high-bandwidth peripherals. Although low-bandwidth peripherals can be included as AHB Subordinates, for system performance reasons, they typically reside on the AMBA *Advanced Peripheral Bus* (APB). Bridging between the higher performance AHB and APB is done using an AHB Subordinate, known as an APB bridge.

Figure 1-1 shows a single Manager AHB system design with the AHB Manager and three AHB Subordinates. The bus interconnect logic consists of one address decoder and a Subordinate-to-Manager multiplexor. The decoder monitors the address from the Manager during the address phase so that the appropriate Subordinate is selected during the data phase of a transfer. The multiplexor routes the corresponding Subordinate output data back to the Manager.

AHB also supports multi-Manager designs by the use of an interconnect component that provides arbitration and routing signals from different Managers to the appropriate Subordinates.

Note

Figure 1-1 shows only the main address and data buses and typical data routing. Not all signals are shown.

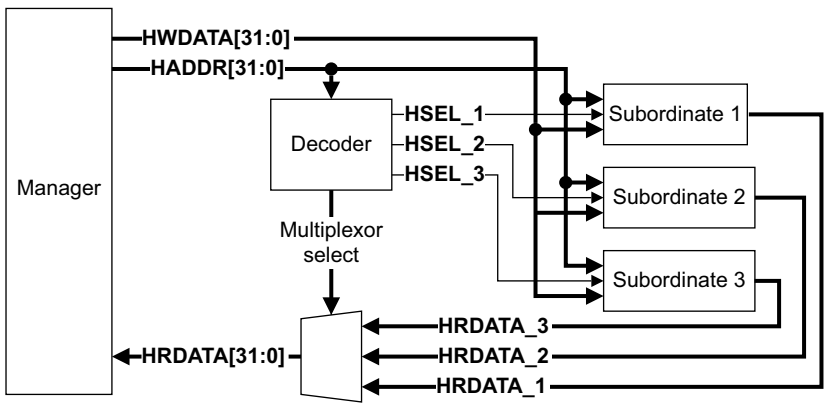

Figure 1-1 AHB block diagram

The main component types of an AHB system are described in:

- *Manager* on page 1-15
- *Subordinate* on page 1-15
- *Interconnect* on page 1-16

Copyright © 2001, 2006, 2010, 2015, 2021 Arm Limited or its affiliates. All rights reserved.
Non-Confidential