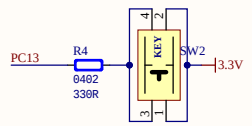

用户按键
User KEY

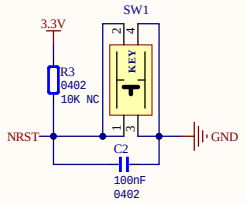

复位电路
Reset circuit

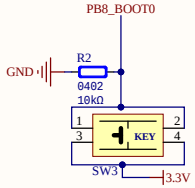

BOOT设置
BOOT Settings

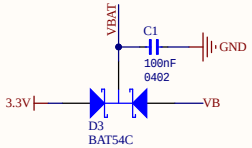

RTC电源
RTC circuit

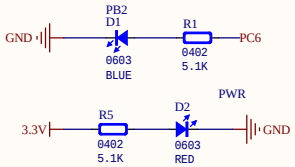

指示灯
Indicator light

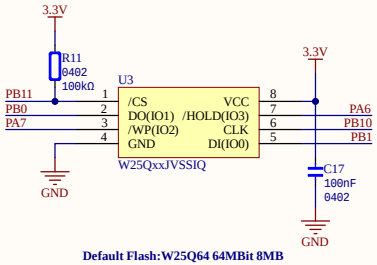

Default Flash:W25Q64 64MBit 8MB

FLASH

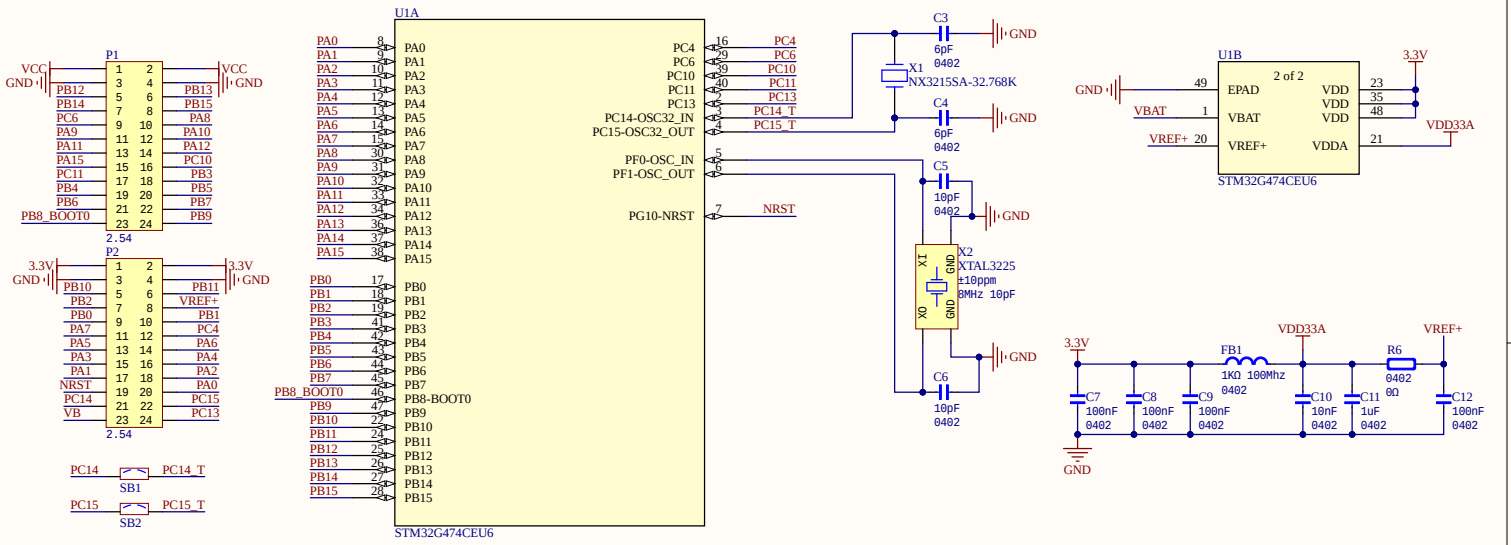

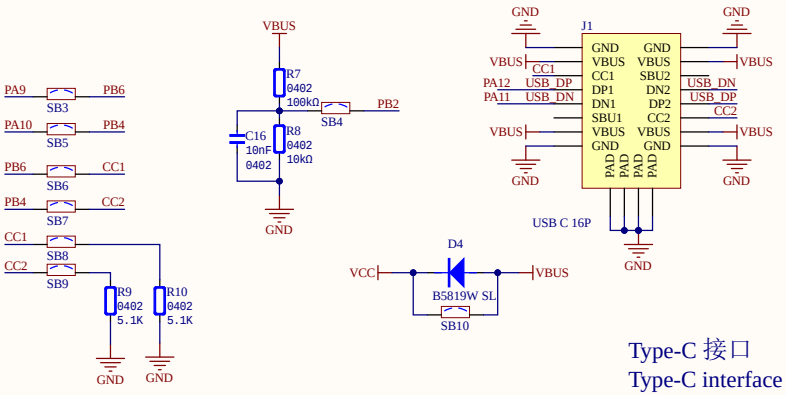

Type-C 接口
Type-C interface

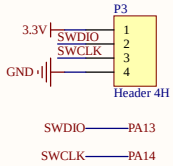

SW 调试下载接口
SW debug download interface

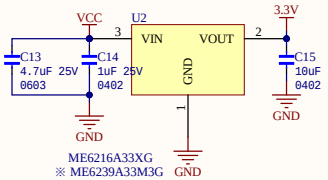

VCC -> 3.3V 电源转换
VCC -> 3.3V Power conversion
VCC IN: 3.3V - 20V

WeAct Studio

Title	STM32G474 Core Board	
Size A3	Number	Revision V1.0
Date: 11/09/2023	Sheet of	
File: E:\WeActStudio\..\WeAct-STM32G47x_Core.SchDoc	Drawn By: zhuyix	