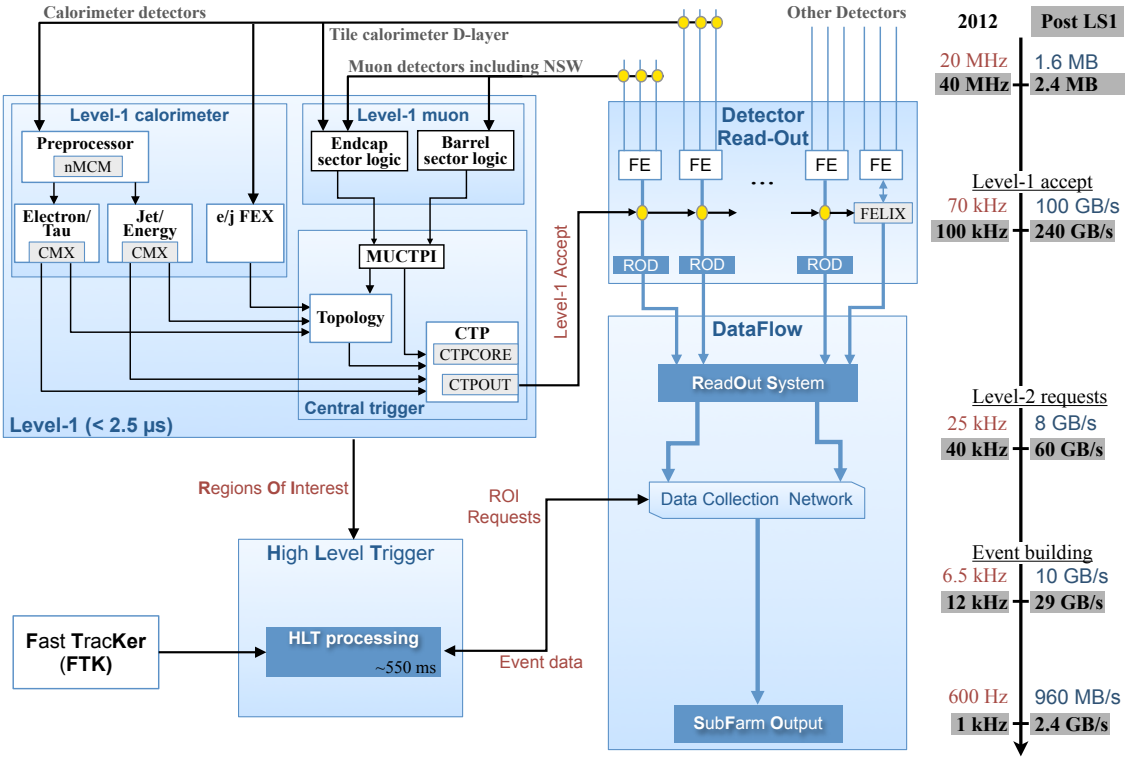
Calorimeter detectors
Tile calorimeter D-layer
Muon detectors including NSW
Other Detectors
Level-1 calorimeter
Preprocessor
nMCM
Electron/ Tau
CMX
Jet/ Energy
CMX
e/j FEX
Level-1 muon
Endcap sector logic
Barrel sector logic
MUCTPI
Topology
CTP
CTPCORE
CTPOUT
Central trigger
Level-1 (< 2.5 μs)
Level-1 Accept
Detector Read-Out
FE
FE
FE
FE
FELIX
ROD
ROD
ROD
DataFlow
ReadOut System
Data Collection Network
SubFarm Output
Regions Of Interest
ROI Requests
High Level Trigger
HLT processing
~550 ms
Event data
Fast TracKer (FTK)
2012
Post LS1
20 MHz
1.6 MB
40 MHz
2.4 MB
Level-1 accept
70 kHz
100 GB/s
100 kHz
240 GB/s
Level-2 requests
25 kHz
8 GB/s
40 kHz
60 GB/s
Event building
6.5 kHz
10 GB/s
12 kHz
29 GB/s
600 Hz
960 MB/s
1 kHz
2.4 GB/s