TOL.GRADE / R	TOLERANCE Ⅰ	Ⅱ	Ⅲ
0 < L ≤ 4	±0.1	±0.2	±0.3
4 < L ≤ 16	±0.2		
16 < L ≤ 63	±0.3	±0.3	±0.5
63 < L ≤ 250	±0.5	±0.5	±0.8
250 < L ≤ 1000	±0.8	±0.8	±1.2
1000 < L	±1.5	±1.5	±2.3

CHANGED CONTENTS	SYM	DATE	DES	CHE	APP

L≫탭≫절곡

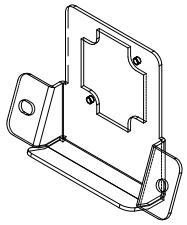

<3D VIEW>
SCALE 1/1

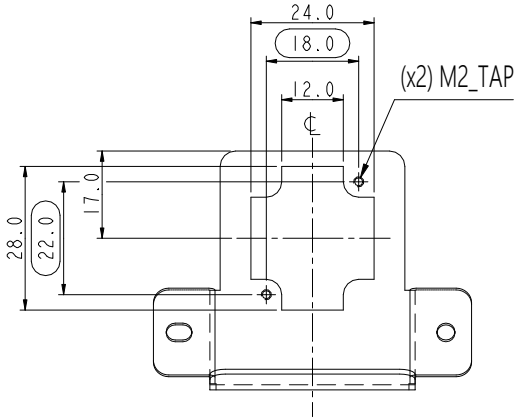

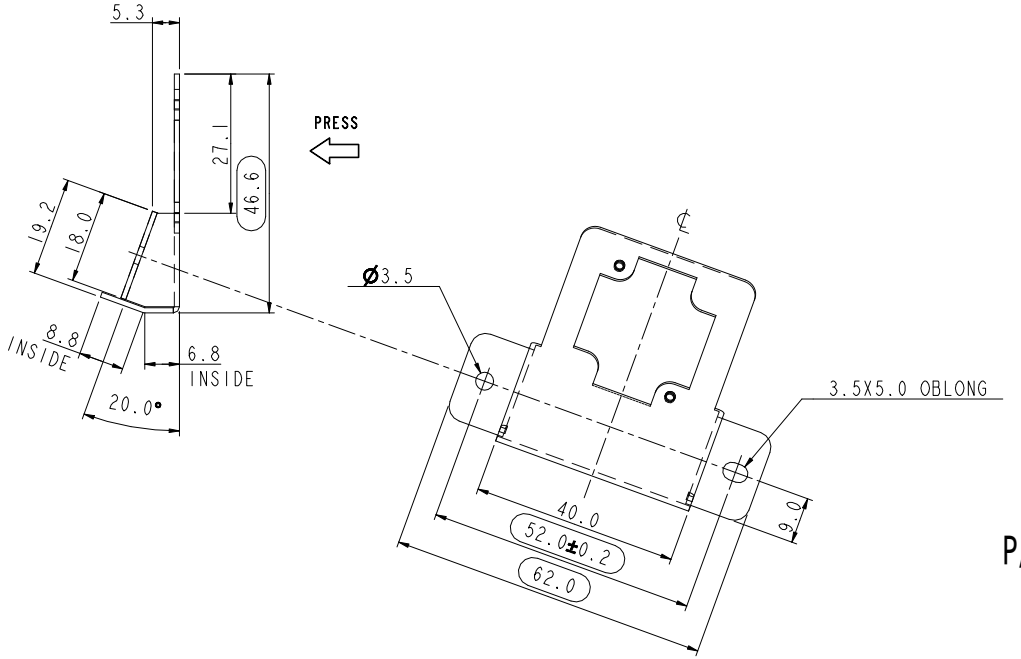

#참조도:절곡
EGI_1.0T R=0.3/0.1

P/N : 4000500714

SAMPLE

(x2) M2_TAP

NOTES
1. Unspecified Radii R=3.0
2. Carry out Coinig Bending (Inside Bending R is less than 0.2)
3. Tolerance of distance between holes on the same plane should be less than ±0.1.
4. Unspecified Bending Angle 90°
5. Remove the Burr.
6. Pay attention to direction of Press.
7. Fracture surface should be painted with silver markers on all the rounds or treated with comparable work (rust proofing treatment) to prevent rust.
   - The rust proofing treatment should be complied with Manufacturing Standards (S8-16-0001).
   - For painting with silver markers, make sure to use Silver Marker Oil Base Pen (made by Monami, Korea) or similar ones.
   - Make sure to mark two black dots on the fracture surface of any parts (within 10mm) to which Rust proofing treatment (OKC RUST #701) has been applied.

NOTES
1. 지시없는 라운드 R=3.0
2. Coinig Bending 할 것. (Bending 내측 R은 0.2이하)
3. 동일 평면 상의 Hole 간 거리는 ±0.1 이하일 것.
4. 지시없는 Bending 각도는 90°
5. 전단면 Burr 없을 것.
6. Press (=Punching) 방향에 유의할 것
7. 파단면 전들래는 녹방지를 위해 은분처리 또는 그에 준하는 작업(방청)을 할 것.
   - 파단면 녹방지 작업은 작업 표준서 (S8-16-0001)에 준할 것.
   - 은분 작업은 Silver Marker Oil Base Pen (Korea Monami) 또는 유사품 사용할 것
   - 방청(OKC Rust #701) 적용품은 파단면에 검은색 점표시 2개할 것(10mm 이내)

▶MATERIAL	SECC 1.0t		▶PART NAME	▶SCALE
▶SURFACE			STEEL; BRKT:NFC_CAM_FACE_FRT_NCT	1/1
▶DESIGNED	▶CHECKED	▶APPROVED		▶SHEET
2026.03.23 김동현	2026.03.23 남영준	2026.03.23 문창환		1/1
HYOSUNG TNS			▶PART No. 4000500714	▶SYM A

본 도면은 효성TNS 자산으로 영업비밀로 엄격히 관리되며 무단 배포 및 불법적인 사용을 금합니다.
This drawing is property of Hyosung TNS INC. and strictly treated as a trade secret.
Therefore unauthorized distribution and illegal use are prohibited.