TOLERANCE			
R	⊕	軸	孔
0<L≤4	±0.1	±0.2	±0.3
4<L≤16	±0.2		
16<L≤63	±0.3	±0.3	±0.5
63<L≤250	±0.5	±0.5	±0.8
250<L≤1000	±0.8	±0.8	±1.2
1000<L	±1.5	±1.5	±2.3

CHANGED CONTENTS	SYM	DATE	DES	CHE	APP

»압입»서브용접

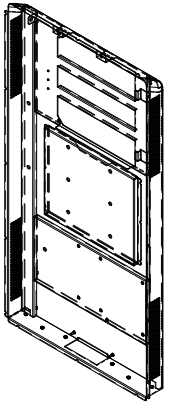

<3D VIEW>
SCALE 1/5

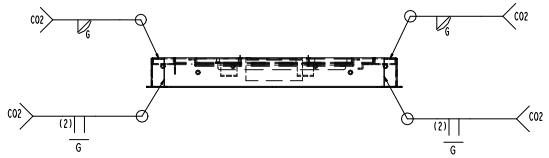

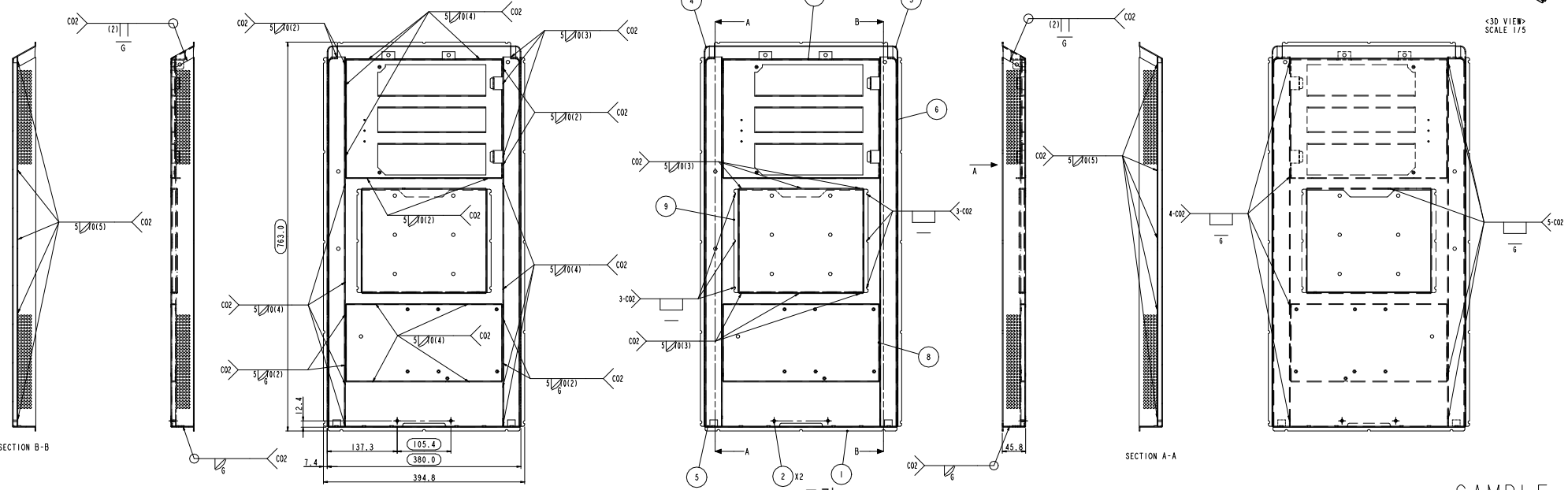

(x2) 코킹_M4X10

VIEW A

SAMPLE

NOTES.
1. This is a drawing for welding.
2. The perpendicularity and horizontality should be maintained after welding.
3. Make sure to keep the parts close to each other during welding.
4. Consult with the designer for welds other than instructed welding parts.
5. Next Process :
   1) Welding
   2) Powder coating
6. ◯: This mark means the dimension to be inspected.

NOTES.
1. 본 도면은 용접 도면임.
2. 용접 후 직각도 및 수평도가 유지될 것.
3. 용접시 각 부품 밀착하여 작업 할 것.
4. 용접 지시 이외 용접부는 설계자와 상의하에 진행 할 것.
5. 후공정 :
   1) 용접
   2) 분체 도장
6. ◯ 표시부는 수검 관리 치수임.

No	PART No.	PART NAME	MATERIAL	QTY	REMARK
9	4000500680	STEEL :FRAME:BODY_MOUNT_RE_NCT	SECC 1.6t	1	
8	4000500704	STEEL :FRAME:HOR_BODY_RE_MID_NCT	SECC 1.6t	1	
7	4000500703	STEEL :FRAME:HOR_BODY_RE_NCT	SECC 1.6t	1	
6	4000500644	STEEL :FRAME:VER_BODY_R_REAR_NCT	SECC 1.6t	1	
5	4000500643	STEEL :FRAME:VER_BODY_L_REAR_NCT	SECC 1.6t	1	
4	4000500683	STEEL :FRAME:CORNER_L_BODY_RE_NCT	SECC 1.6t	1	
3	4000500689	STEEL :FRAME:CORNER_R_BODY_RE_NCT	SECC 1.6t	1	
2	44830032	SCREW :CAULKING:M4X10:W/ZN	SWCH	2	
1	4000500681	STEEL :FRAME:BODY_REAR_NCT	SECC 1.6t	1	

▶MATERIAL		▶PART NAME		▶SCALE
▶SURFACE		K_STEEL; FRAME:BODY_REAR_NCT		1/4
▶DESIGNED	▶CHECKED	▶APPROVED		▶SHEET
2026.03.21 김동현	2026.03.21 남영준	2026.03.21 문창환		1/1
HYOSUNG TNS		▶PART No. 4140500231		▶SYM 00

P/N : 4140500231

본 도면은 효성TNS 자산으로 영업비밀로 엄격히 관리되며 무단 배포 및 불법적인 사용을 금합니다.
This drawing is property of Hyosung TNS INC. and strictly treated as a trade secret.
Therefore unauthorized distribution and illegal use are prohibited.