TOL.GRADE	TOLERANCE		
R	f	m	c
0 < L ≤ 4	±0.1	±0.2	±0.3
4 < L ≤ 16	±0.2		
16 < L ≤ 63	±0.3	±0.3	±0.5
63 < L ≤ 250	±0.5	±0.5	±0.8
250 < L ≤ 1000	±0.8	±0.8	±1.2
1000 < L	±1.5	±1.5	±2.3

CHANGED CONTENTS	SYM	DATE	DES	CHE	APP

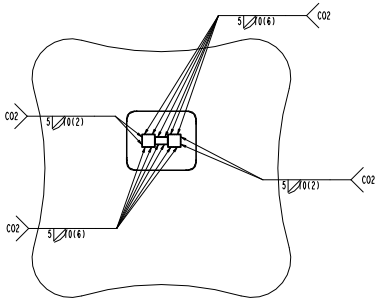

SECTION B-B

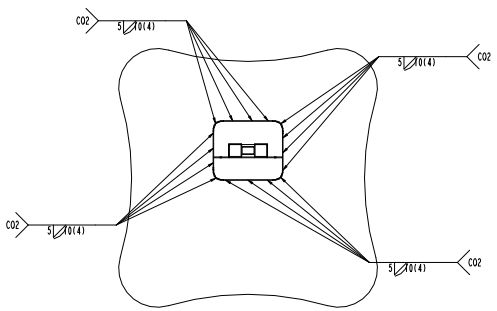

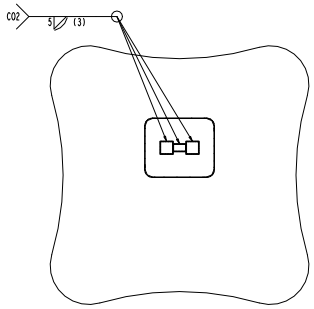

SECTION A-A

»용접»도장

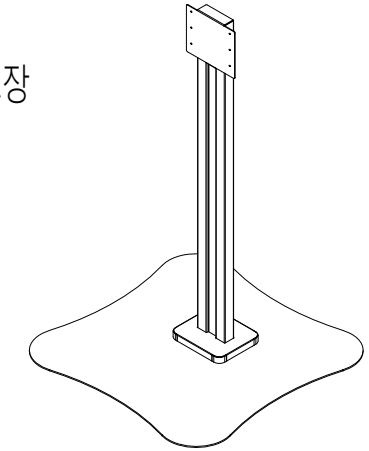

<3D VIEW>
SCALE 1/10

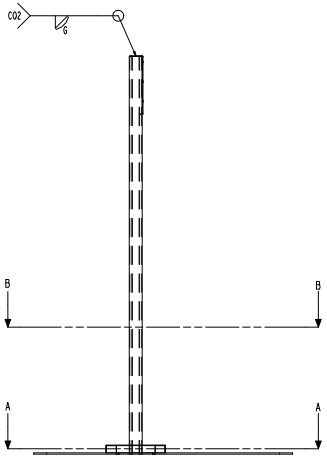

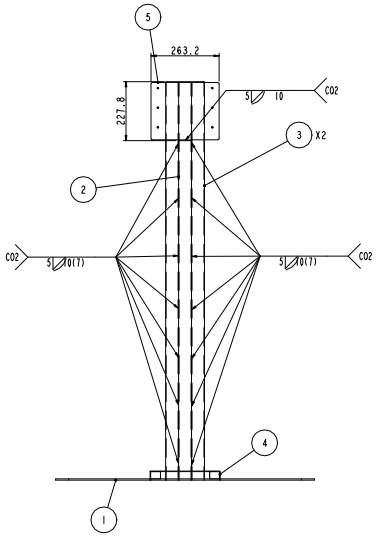

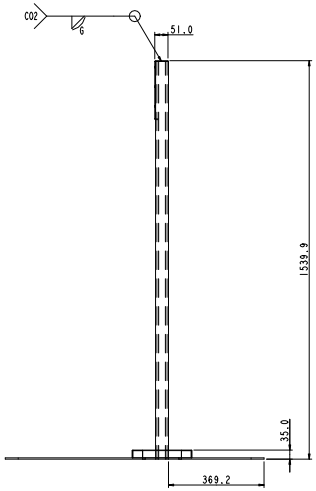

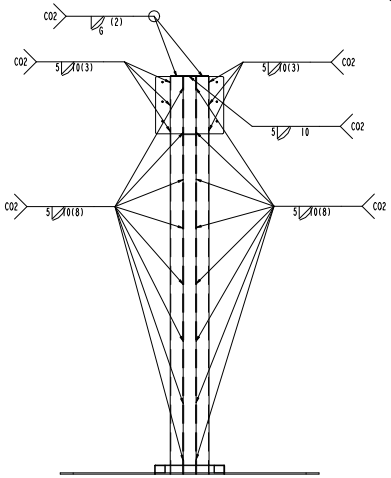

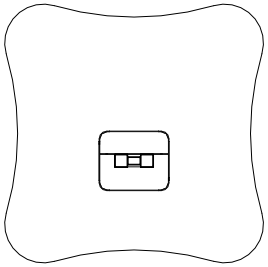

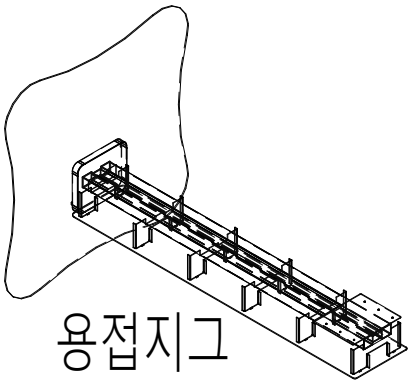

용접지그

P/N : 4140500237

SAMPLE

NOTES.
1. This is a drawing for welding and painting.
2. Painting Specifications
   - Hammertone powder coating (MN327K / AKZONOBEL) or our approved material
3. Paint Thickness
   - The whole: Make sure to maintain an average of 60 or more and 100 microns or less.
4. Apply Heat Treatment after painting .
5. Make sure there is no unpainted surface.
6. PEM Nut,Caulking screw,Pin & TAP should be masked when painting.
7. Hatching section in the drawing should be masked.
8. Consult with the designer and instruct welding for welds other than instructed ones.
9. The flatness and perpendicularity should be maintained after welding.
10. Make sure there is no warpage after welding.
11. The fitting holes of the parts must be blocked after welding.
12. ◯: This mark means the dimension to be inspected.

NOTES.
1. 본 도면은 용접 및 도장 도면 임.
2. 도장 사양
   - 함마톤 분체 도장 (MN327K / 악조노벨) 또는 당사 승인 재질
3. 도장 두께
   - 전체 : 평균 60 이상 100 미크론 이하 유지 할 것.
4. 도장후 열처리 할 것
5. 미도장이 없도록 할 것.
6. 도장시 PEM Nut,Caulking screw,Pin & TAP부는 마스킹 처리 할 것.
7. 도면내 해칭부 지시 영역 마스킹 처리 할 것.
8. 용접지시 이외의 용접부는 용접지도 및 상의하여 진행 할 것.
9. 용접 후 평탄도, 직각도가 유지 될 것.
10. 용접 후 휨이 없을 것.
11. 부품의 맞춤홀은 용접 후 먹음 처리 할 것.
12. ◯ 표시부는 수검 관리 치수임.

No	PART No.	PART NAME	MATERIAL	QTY	REMARK
5	4000500655	STEEL :BRKT:MOUNT_STAND_WALL_NCT	SPCC 3.0t	1	
4	4140500229	K_STEEL :COVER:STAND_BOT_NCT		1	
3	4000500640	STEEL :FRAME:SPCC:2.0:STAND_SI_V_NCT	SPCC 2.0t	2.0t 2	
2	4000500639	STEEL :FRAME:SPCC:2.0:STAND_CEN_V_NCT	SPCC 2.0t	2.0t 1	
1	4000500656	STEEL :PLATE:SPHC:5.0:STAND_BOTTOM_NCT	SPHC 5.0t	1	

▶MATERIAL		▶PART NAME	▶SCALE
▶SURFACE	SPRAY	K_STEEL; FRAME:STAND_BODY_NCT	1/10
▶DESIGNED	▶CHECKED / ▶APPROVED		▶SHEET
2026.03.23 김동현	2026.03.23 남영준 / 2026.03.23 문창환		1/1
HYOSUNG TNS		▶PART No. 4140500237	▶SYM 00

본 도면은 효성TNS 자산으로 영업비밀로 엄격히 관리되며 무단 배포 및 불법적인 사용을 금합니다.
This drawing is property of Hyosung TNS INC. and strictly treated as a trade secret.
Therefore unauthorized distribution and illegal use are prohibited.