TOL.GRADE / R	TOLERANCE Ⅰ	Ⅱ	Ⅲ
0 < L ≤ 4	±0.1	±0.2	±0.3
4 < L ≤ 16	±0.2		
16 < L ≤ 63	±0.3	±0.3	±0.5
63 < L ≤ 250	±0.5	±0.5	±0.8
250 < L ≤ 1000	±0.8	±0.8	±1.2
1000 < L	±1.5	±1.5	±2.3

CHANGED CONTENTS	SYM	DATE	DES	CHE	APP

NOTES.
1. 본 도면은 PEM NUT 압입 도면임.
2. 압입 작업 후 직각도 유지 할 것.
3. 압입 작업 후 아래와 같이 Torque-out 강도를 유지 하도록 할 것.
   - M3 PEM NUT : 30Kgf.cm 이상, M4/M5 PEM NUT : 60Kgf.cm 이상
4. Torque-out 테스트
   - SCM 재질의 육각 머리 볼트를 체결후 토크 렌치로 Torque-out 강도를 측정 한다.

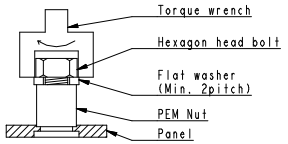

<Torque-out test>

5. 외곽 파단면 전둘레는 녹방지를 위해 은분처리 또는 그에 준하는 작업(방청)을 할 것.
   - 파단면 녹방지 작업은 작업 표준서 (S8-16-0001)에 준할 것.
   - 은분 작업은 Silver Powder Oil Base Pen (Korea Monami) 또는 유사품 사용할 것
   - 방청(OKC Rust #701) 적용품은 파단면에 검은색 점표시 2개할 것(10mm 이내)
6. ◯ 표시부는 치수 또는 주석의 수검 관리 항목임.

NOTES.
1. This is a drawing for PEM NUT indentation.
2. Make sure to maintain the perpendicularity after indentation.
3. Make sure to maintain torque-out strength as below.
   - M3 PEM NUT : 30Kgf.cm or more, M4/M5 PEM NUT : 60Kgf.cm or more
4. Torque-out test
   - Measure torque-out strength with a torque wrench after fastening a hexagonal head bolt made of SCM material.

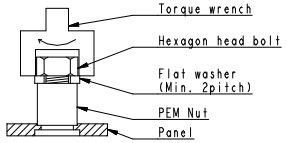

<Torque-out test>

5. The outer fracture surface should be painted with silver powder on all the rounds or treated with comparable work (rust proofing treatment) to prevent rust.
   - The rust proofing treatment should be complied with Manufacturing Standards (S8-16-0001).
   - For painting with silver powder, make sure to use Silver Powder Oil Base Pen (made by Monami, Korea) or similar ones.
   - Make sure to mark two black dots on the fracture surface of any parts (within 10mm) to which Rust proofing treatment (OKC RUST #701) has been applied.
6. ◯: This mark means the dimension or notes item to be inspected.

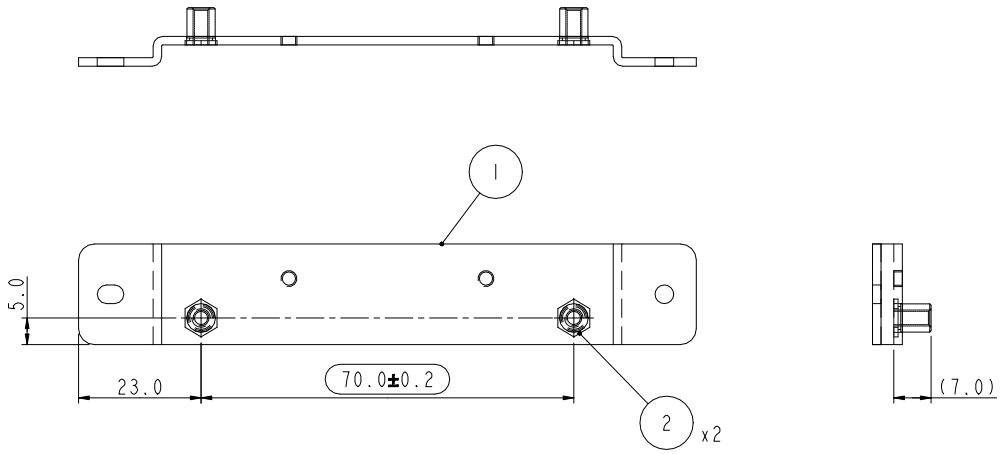

(x2) 펨넛_M3X7_관통

≫압입

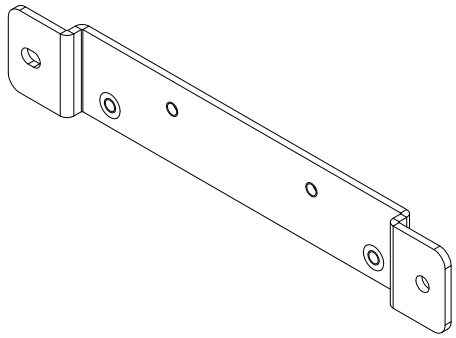

<3D VIEW>
SCALE 1/1

P/N : 4140500245

SAMPLE

No	PART No.	PART NAME	MATERIAL	QTY	REMARK
2	44966505	PEM_NUT :M3x7:THRU:W/ZN:T16-T30	SUM 22	2	
1	4000500716	STEEL :BRKT:PROXIMITY_SENSOR_NCT	1.6t	1	

▸MATERIAL		▸PART NAME	▸SCALE
▸SURFACE		K_STEEL; BRKT_PROXIMITY_SENSOR_NCT	1/1
▸DESIGNED	▸CHECKED	▸APPROVED	▸SHEET
2026.03.20	2026.03.20	2026.03.20	1/1
김동현	남영준	문창환	
HYOSUNG TNS		▸PART No. 4140500245	▸SYM 00

본 도면은 효성TNS 자산으로 영업비밀로 엄격히 관리되며 무단 배포 및 불법적인 사용을 금합니다.
This drawing is property of Hyosung TNS INC. and strictly treated as a trade secret.
Therefore unauthorized distribution and illegal use are prohibited.