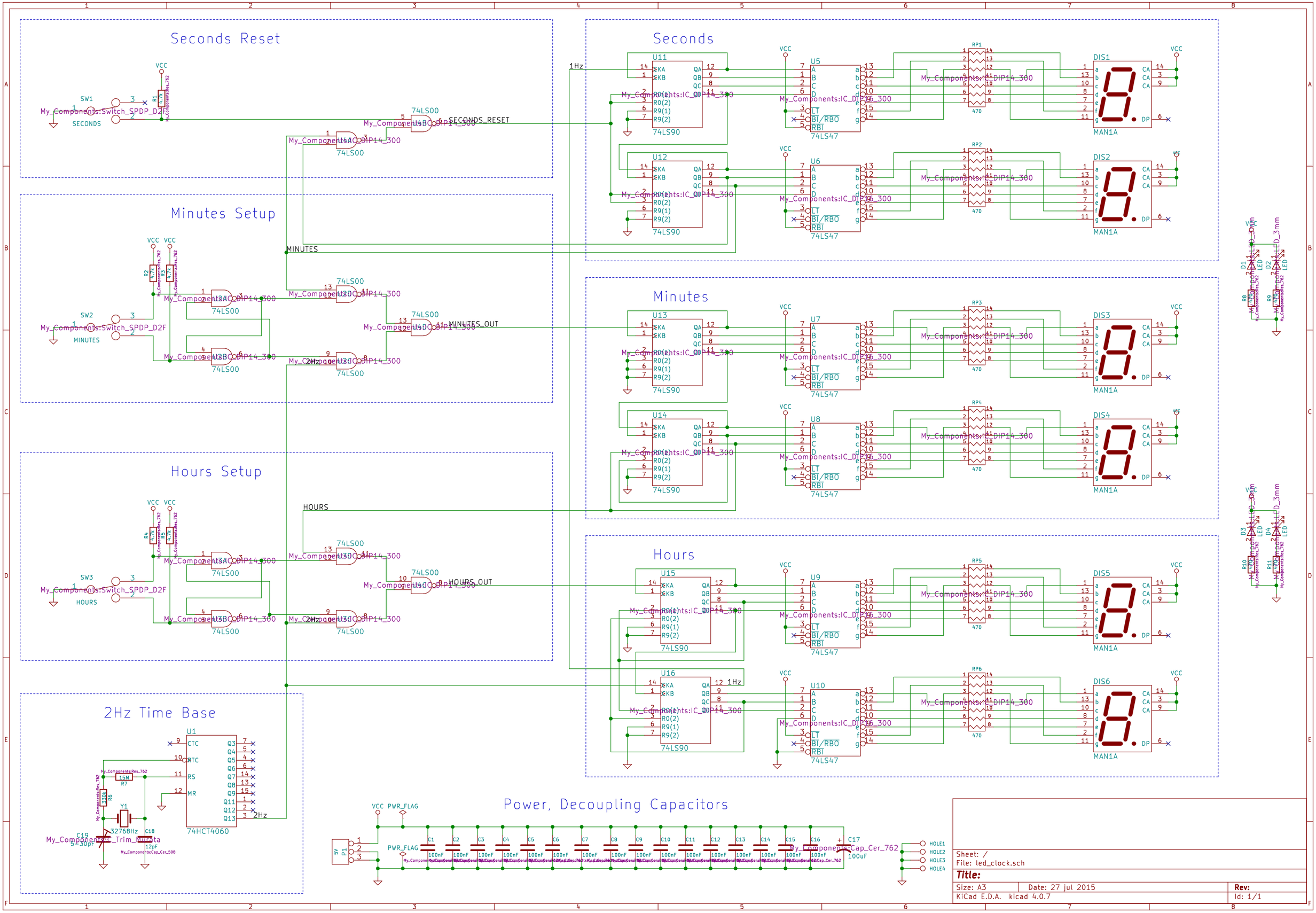
Seconds Reset
Minutes Setup
Hours Setup
2Hz Time Base
Seconds
Minutes
Hours
Power, Decoupling Capacitors
SECONDS_RESET
MINUTES
MINUTES_OUT
HOURS
HOURS_OUT
1Hz
2Hz
VCC
PWR_FLAG
SW1
SW2
SW3
SECONDS
MINUTES
HOURS
U1
74HCT4060
Y1
3276BHz
C19
5-30pF
C18
12pF
R7
15M
R6
330k
U11
U12
U13
U14
U15
U16
74LS90
U5
U6
U7
U8
U9
U10
74LS47
DIS1
DIS2
DIS3
DIS4
DIS5
DIS6
MAN1A
RP1
RP2
RP3
RP4
RP5
RP6
470
C1
C2
C3
C4
C5
C6
C7
C8
C9
C10
C11
C12
C13
C14
C15
C16
C17
100nF
100uF
P1
5V
HOLE1
HOLE2
HOLE3
HOLE4
Sheet: /
File: led_clock.sch
Title:
Size: A3
Date: 27 jul 2015
Rev:
KiCad E.D.A. kicad 4.0.7
Id: 1/1