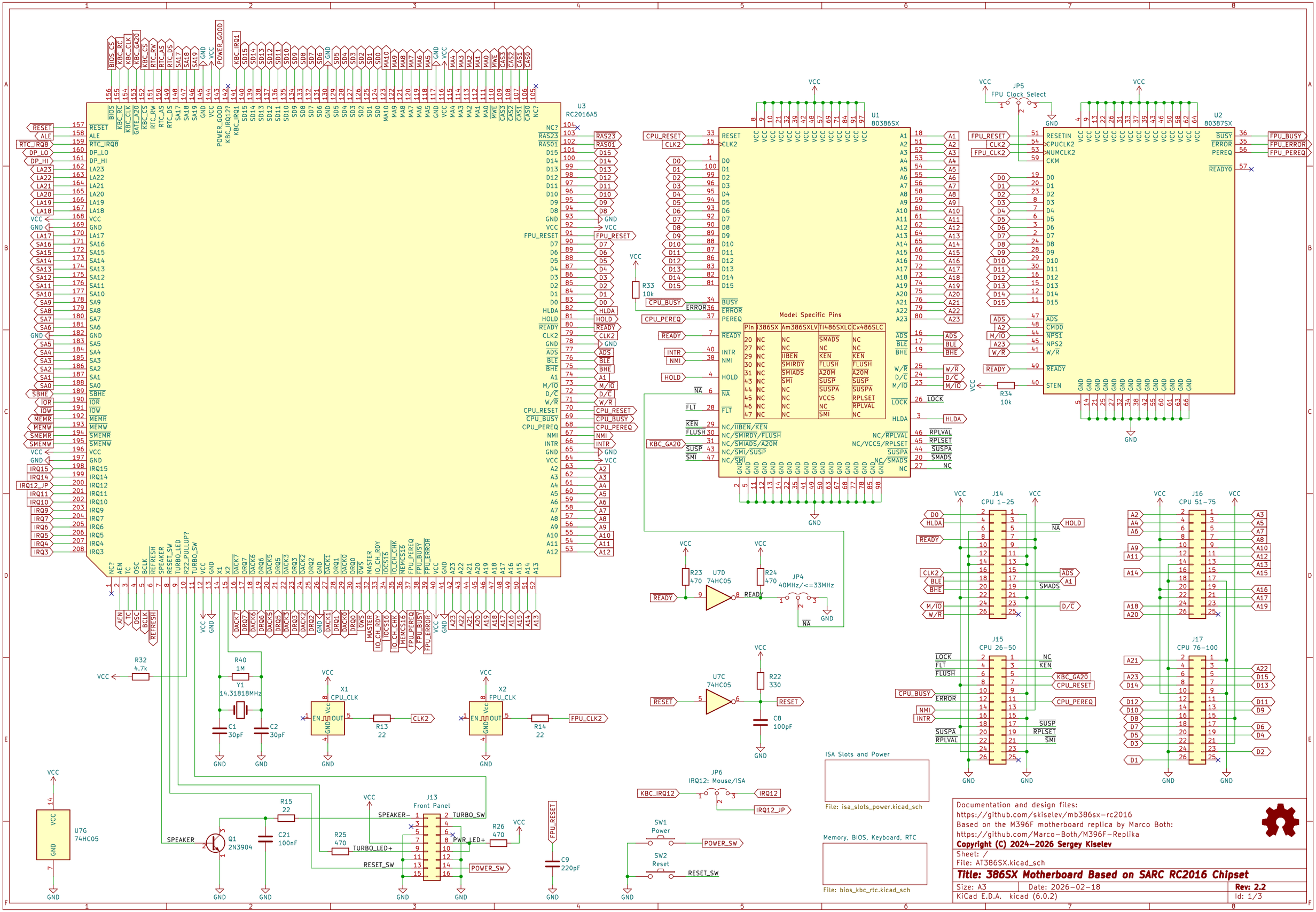


Documentation and design files:
https://github.com/skiselev/mb386sx-rc2016
Based on the M396F motherboard replica by Marco Both:
https://github.com/Marco-Both/M396F-Replika

**Copyright (C) 2024-2026 Sergey Kiselev**

Sheet: /
File: AT386SX.kicad_sch

**Title: 386SX Motherboard Based on SARC RC2016 Chipset**

| | | |
|---|---|---|
| Size: A3 | Date: 2026-02-18 | Rev: 2.2 |
| KiCad E.D.A. kicad (6.0.2) | | Id: 1/3 |

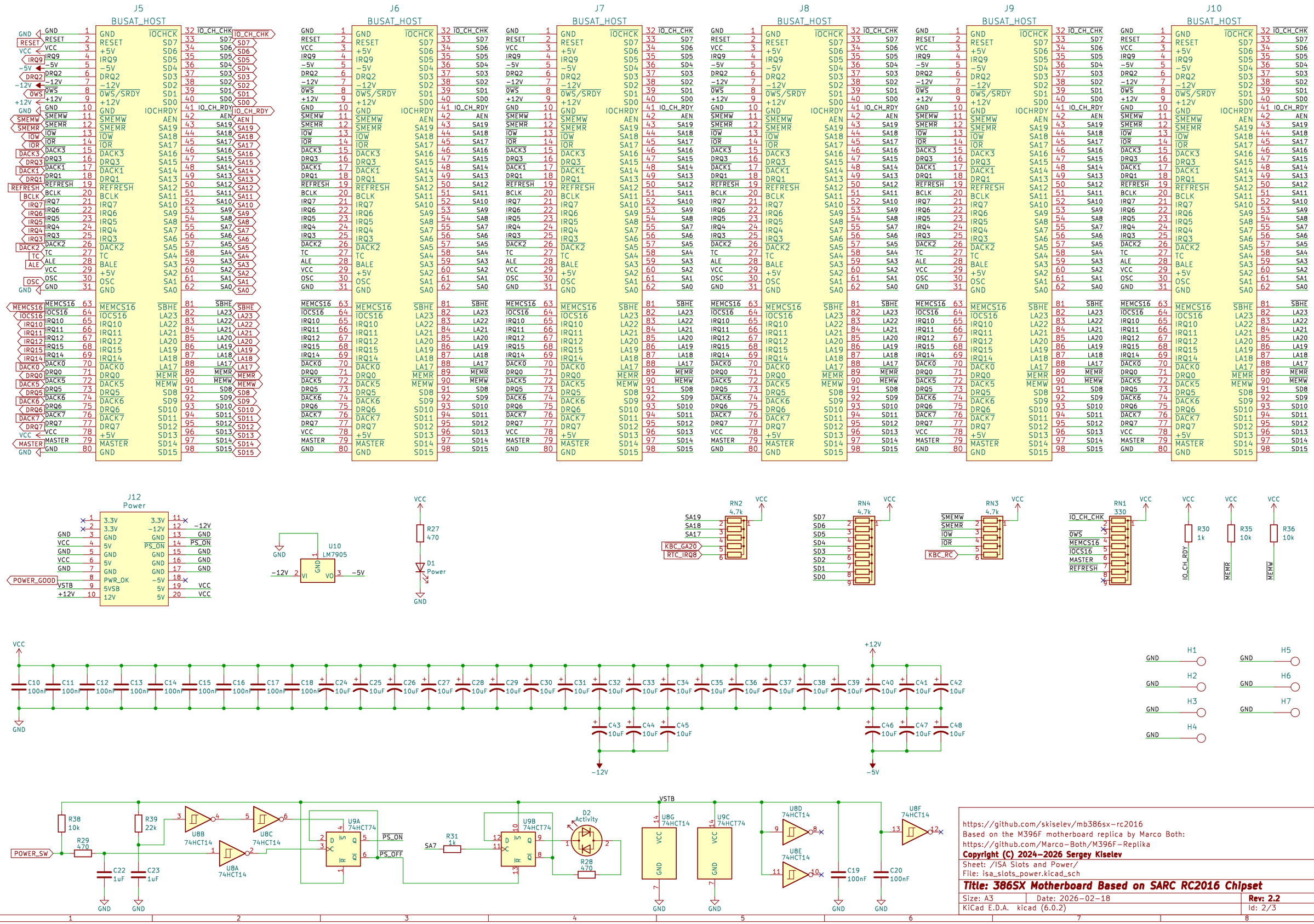
J5
J6
J7
J8
J9
J10
BUSAT_HOST
J12
Power
U10
LM7905
R27
470
D1
Power
RN2
4.7k
RN4
4.7k
RN3
4.7k
RN1
330
R30
1k
R35
10k
R36
10k
C10 100nF
C11 100nF
C12 100nF
C13 100nF
C14 100nF
C15 100nF
C16 100nF
C17 100nF
C18 100nF
C24 10uF
C25 10uF
C26 10uF
C27 10uF
C28 10uF
C29 10uF
C30 10uF
C31 10uF
C32 10uF
C33 10uF
C34 10uF
C35 10uF
C36 10uF
C37 10uF
C38 10uF
C39 10uF
C40 10uF
C41 10uF
C42 10uF
C43 10uF
C44 10uF
C45 10uF
C46 10uF
C47 10uF
C48 10uF
H1
H2
H3
H4
H5
H6
H7
R38
10k
R29
470
R39
22k
C22
1uF
C23
1uF
U8B
74HCT14
U8C
74HCT14
U8A
74HCT14
U9A
74HCT74
U9B
74HCT74
PS_ON
PS_OFF
R31
1k
D2
Activity
R28
470
U8G
74HCT14
U9C
74HCT74
U8D
74HCT14
U8E
74HCT14
U8F
74HCT14
C19
100nF
C20
100nF
POWER_SW
POWER_GOOD
VSTB
https://github.com/skiselev/mb386sx-rc2016
Based on the M396F motherboard replica by Marco Both:
https://github.com/Marco-Both/M396F-Replika
Copyright (C) 2024-2026 Sergey Kiselev
Sheet: /ISA Slots and Power/
File: isa_slots_power.kicad_sch
Title: 386SX Motherboard Based on SARC RC2016 Chipset
Size: A3
Date: 2026-02-18
Rev: 2.2
KiCad E.D.A. kicad (6.0.2)
Id: 2/3

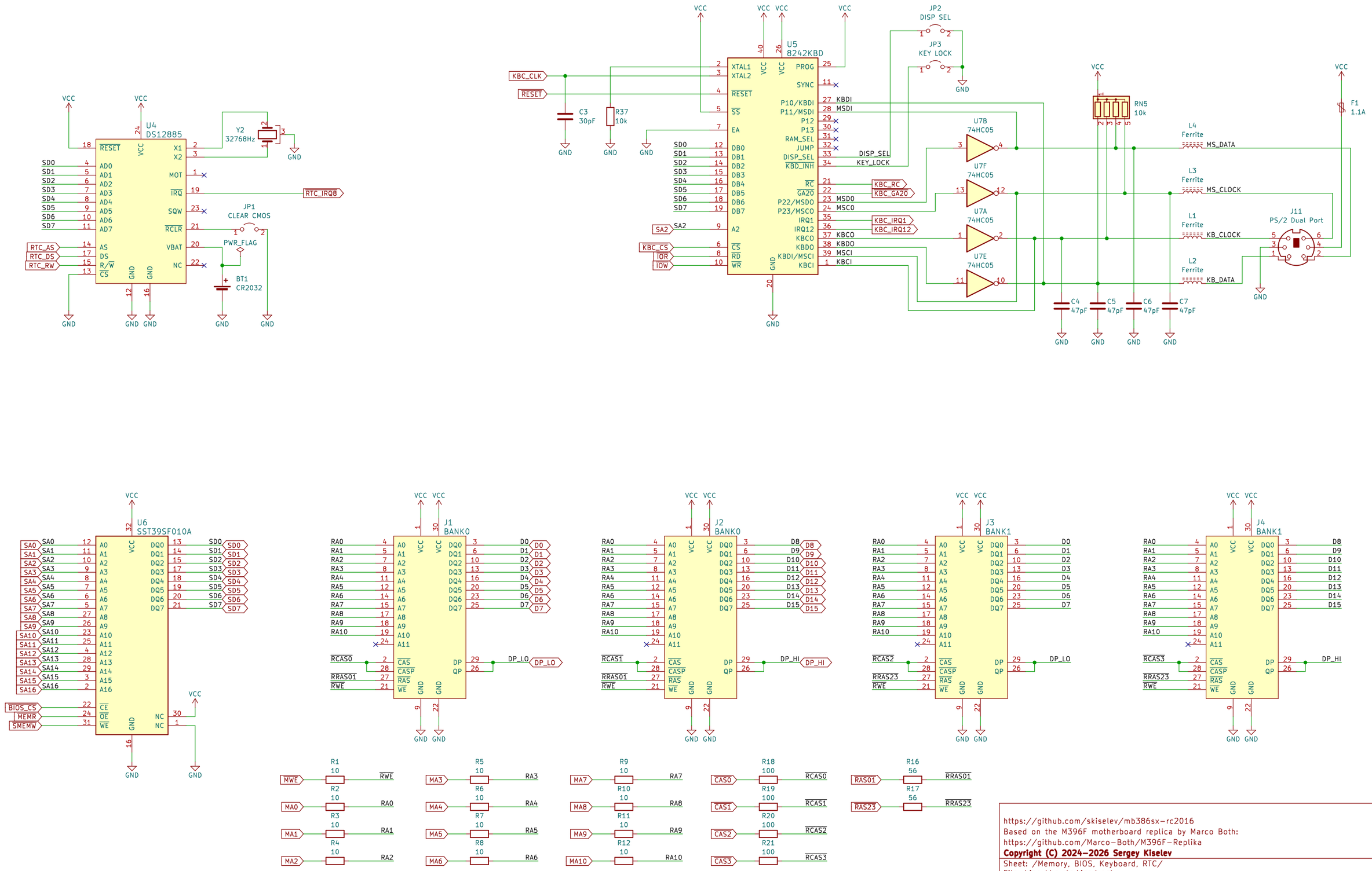


https://github.com/skiselev/mb386sx-rc2016
Based on the M396F motherboard replica by Marco Both:
https://github.com/Marco-Both/M396F-Replika

**Copyright (C) 2024-2026 Sergey Kiselev**

Sheet: /Memory, BIOS, Keyboard, RTC/
File: bios_kbc_rtc.kicad_sch

**Title: 386SX Motherboard Based on SARC RC2016 Chipset**

| | | |
|---|---|---|
| Size: A3 | Date: 2026-02-18 | Rev: 2.2 |
| KiCad E.D.A. kicad (6.0.2) | | Id: 3/3 |