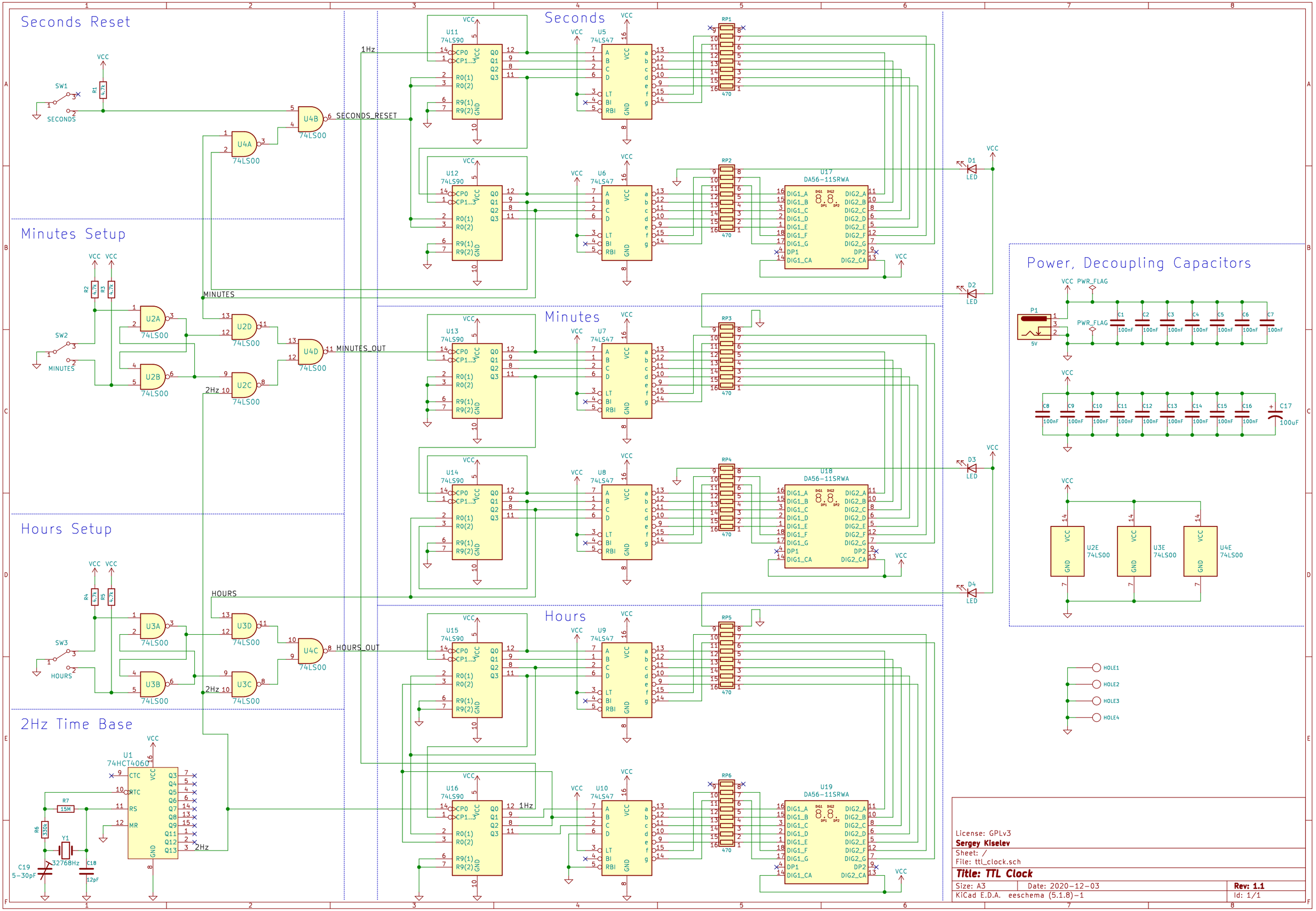
Seconds Reset
Minutes Setup
Hours Setup
2Hz Time Base
Seconds
Minutes
Hours
Power, Decoupling Capacitors
SECONDS_RESET
MINUTES_OUT
HOURS_OUT
1Hz
2Hz
MINUTES
HOURS
License: GPLv3
Sergey Kiselev
Sheet: /
File: ttl_clock.sch
Title: TTL Clock
Size: A3
Date: 2020-12-03
Rev: 1.1
KiCad E.D.A. eeschema (5.1.8)-1
Id: 1/1