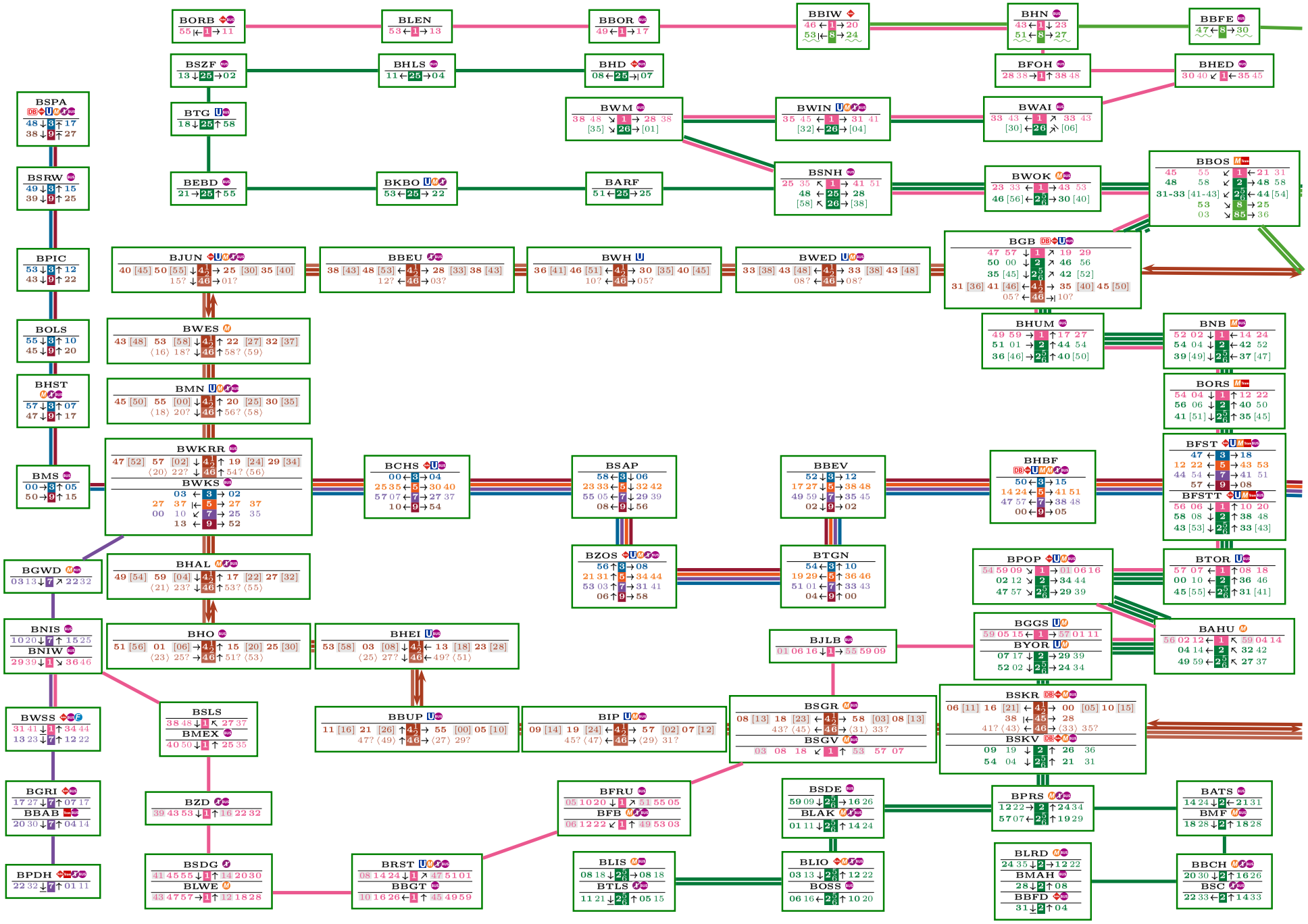
BORB
55 ← 1 → 11
BLEN
53 ← 1 → 13
BBOR
49 ← 1 → 17
BBIW
46 ← 1 → 20
53 |← 8 → 24
BHN
43 ← 1 ↓ 23
51 ← 8 → 27
BBFE
47 ← 8 → 30
BSZF
13 ↓ 25 → 02
BHLS
11 ← 25 → 04
BHD
08 ← 25 →| 07
BFOH
28 38 → 1 ↑ 38 48
BHED
30 40 ↙ 1 ← 35 45
BSPA
48 ↓ 8 ↑ 17
38 ↓ 9 ↑ 27
BTG
18 ↓ 25 ↑ 58
BWM
38 48 ↘ 1 → 28 38
[35] ↘ 26 → [01]
BWIN
35 45 ← 1 → 31 41
[32] ← 26 → [04]
BWAI
33 43 ← 1 ↗ 33 43
[30] ← 26 ↗ [06]
BSRW
49 ↓ 8 ↑ 15
39 ↓ 9 ↑ 25
BEBD
21 → 25 ↑ 55
BKBO
53 ← 25 → 22
BARF
51 ← 25 → 25
BSNH
25 35 ↖ 1 → 41 51
48 ← 25 → 28
[58] ↖ 26 → [38]
BWOK
23 33 ← 1 → 43 53
46 [56] ← 2 5/6 → 30 [40]
BBOS
45 55 ↙ 1 ← 21 31
48 58 ↙ 2 → 48 58
31-33 [41-43] ↙ 2 5/6 ← 44 [54]
53 ↘ 8 → 25
03 ↘ 85 → 36
BPIC
53 ↓ 8 ↑ 12
43 ↓ 9 ↑ 22
BJUN
40 [45] 50 [55] ↓ 4 1/2 → 25 [30] 35 [40]
15? ↓ 46 → 01?
BBEU
38 [43] 48 [53] ← 4 1/2 → 28 [33] 38 [43]
12? ← 46 → 03?
BWH
36 [41] 46 [51] ← 4 1/2 → 30 [35] 40 [45]
10? ← 46 → 05?
BWED
33 [38] 43 [48] ← 4 1/2 → 33 [38] 43 [48]
08? ← 46 → 08?
BGB
47 57 ↓ 1 ↗ 19 29
50 00 ↓ 2 ↗ 46 56
35 [45] ↓ 2 5/6 ↗ 42 [52]
31 [36] 41 [46] ← 4 1/2 → 35 [40] 45 [50]
05? ← 46 →| 10?
BOLS
55 ↓ 8 ↑ 10
45 ↓ 9 ↑ 20
BWES
43 [48] 53 [58] ↓ 4 1/2 ↑ 22 [27] 32 [37]
⟨16⟩ 18? ↓ 46 ↑ 58? ⟨59⟩
BHUM
49 59 → 1 ↑ 17 27
51 01 → 2 ↑ 44 54
36 [46] → 2 5/6 ↑ 40 [50]
BNB
52 02 ↓ 1 ← 14 24
54 04 ↓ 2 ← 42 52
39 [49] ↓ 2 5/6 ← 37 [47]
BHST
57 ↓ 8 ↑ 07
47 ↓ 9 ↑ 17
BMN
45 [50] 55 [00] ↓ 4 1/2 ↑ 20 [25] 30 [35]
⟨18⟩ 20? ↓ 46 ↑ 56? ⟨58⟩
BORS
54 04 ↓ 1 ↑ 12 22
56 06 ↓ 2 ↑ 40 50
41 [51] ↓ 2 5/6 ↑ 35 [45]
BMS
00 → 8 ↑ 05
50 → 9 ↑ 15
BWKRR
47 [52] 57 [02] ↓ 4 1/2 ↑ 19 [24] 29 [34]
⟨20⟩ 22? ↓ 46 ↑ 54? ⟨56⟩
BWKS
03 ← 3 → 02
27 37 |← 5 → 27 37
00 10 ↙ 7 → 25 35
13 ← 9 → 52
BCHS
00 ← 8 → 04
25 35 ← 5 → 30 40
57 07 ← 7 → 27 37
10 ← 9 → 54
BSAP
58 ← 8 ↓ 06
23 33 ← 5 ↓ 32 42
55 05 ← 7 ↓ 29 39
08 ← 9 ↓ 56
BBEV
52 ↓ 8 → 12
17 27 ↓ 5 → 38 48
49 59 ↓ 7 → 35 45
02 ↓ 9 → 02
BHBF
50 ← 3 → 15
14 24 ← 5 → 41 51
47 57 ← 7 → 38 48
00 ← 9 → 05
BFST
47 ← 3 → 18
12 22 ← 5 → 43 53
44 54 ← 7 → 41 51
57 ← 9 → 08
BFSTT
56 06 ↓ 1 ↑ 10 20
58 08 ↓ 2 ↑ 38 48
43 [53] ↓ 2 5/6 ↑ 33 [43]
BGWD
03 13 ↓ 7 ↗ 22 32
BHAL
49 [54] 59 [04] ↓ 4 1/2 ↑ 17 [22] 27 [32]
⟨21⟩ 23? ↓ 46 ↑ 53? ⟨55⟩
BZOS
56 ↑ 3 → 08
21 31 ↑ 5 → 34 44
53 03 ↑ 7 → 31 41
06 ↑ 9 → 58
BTGN
54 ← 3 ↑ 10
19 29 ← 5 ↑ 36 46
51 01 ← 7 ↑ 33 43
04 ← 9 ↑ 00
BPOP
54 59 09 ↘ 1 → 01 06 16
02 12 ↘ 2 → 34 44
47 57 ↘ 2 5/6 → 29 39
BTOR
57 07 ← 1 ↑ 08 18
00 10 ← 2 ↑ 36 46
45 [55] ← 2 5/6 ↑ 31 [41]
BNIS
10 20 ↓ 7 ↑ 15 25
BNIW
29 39 ↓ 1 ↘ 36 46
BHO
51 [56] 01 [06] → 4 1/2 ← 15 [20] 25 [30]
⟨23⟩ 25? → 46 ← 51? ⟨53⟩
BHEI
53 [58] 03 [08] ↓ 4 1/2 ← 13 [18] 23 [28]
⟨25⟩ 27? ↓ 46 ← 49? ⟨51⟩
BJLB
01 06 16 ↓ 1 → 55 59 09
BGGS
59 05 15 ← 1 → 57 01 11
BYOR
07 17 ↓ 2 → 29 39
52 02 ↓ 2 5/6 → 24 34
BAHU
56 02 12 ← 1 ↖ 59 04 14
04 14 ← 2 ↖ 32 42
49 59 ← 2 5/6 ↖ 27 37
BWSS
31 41 ↓ 1 ↑ 34 44
13 23 ↓ 7 ↑ 12 22
BSLS
38 48 ↓ 1 ↖ 27 37
BMEX
40 50 ↓ 1 ↑ 25 35
BBUP
11 [16] 21 [26] ↑ 4 1/2 → 55 [00] 05 [10]
47? ⟨49⟩ ↑ 46 → ⟨27⟩ 29?
BIP
09 [14] 19 [24] ← 4 1/2 → 57 [02] 07 [12]
45? ⟨47⟩ ← 46 → ⟨29⟩ 31?
BSGR
08 [13] 18 [23] ← 4 1/2 → 58 [03] 08 [13]
43? ⟨45⟩ ← 46 → ⟨31⟩ 33?
BSGV
03 08 18 ↙ 1 ↑ 53 57 07
BSKR
06 [11] 16 [21] ← 4 1/2 → 00 [05] 10 [15]
38 |← 45 → 28
41? ⟨43⟩ ← 46 → ⟨33⟩ 35?
BSKV
09 19 ↓ 2 ↑ 26 36
54 04 ↓ 2 5/6 ↑ 21 31
BGRI
17 27 ↓ 7 ↑ 07 17
BBAB
20 30 ↓ 7 ↑ 04 14
BZD
39 43 53 ↓ 1 ↑ 16 22 32
BFRU
05 10 20 ↓ 1 ↗ 51 55 05
BFB
06 12 22 ↙ 1 ↑ 49 53 03
BSDE
59 09 ↓ 2 5/6 → 16 26
BLAK
01 11 ↓ 2 5/6 ↑ 14 24
BPRS
12 22 → 2 ↑ 24 34
57 07 ← 2 5/6 ↑ 19 29
BATS
14 24 ↓ 2 ← 21 31
BMF
18 28 ↓ 2 ↑ 18 28
BPDH
22 32 ↓ 7 ↑ 01 11
BSDG
41 45 55 ↓ 1 ↑ 14 20 30
BLWE
43 47 57 → 1 ↑ 12 18 28
BRST
08 14 24 ↓ 1 ↗ 47 51 01
BBGT
10 16 26 ← 1 ↑ 45 49 59
BLIS
08 18 ↓ 2 5/6 → 08 18
BTLS
11 21 ↓ 2 5/6 ↑ 05 15
BLIO
03 13 ↓ 2 5/6 ↑ 12 22
BOSS
06 16 ← 2 5/6 ↑ 10 20
BLRD
24 35 ↓ 2 → 12 22
BMAH
28 ↓ 2 ↑ 08
BBFD
31 ↓ 2 ↑ 04
BBCH
20 30 ↓ 2 ↑ 16 26
BSC
22 33 ← 2 ↑ 14 33

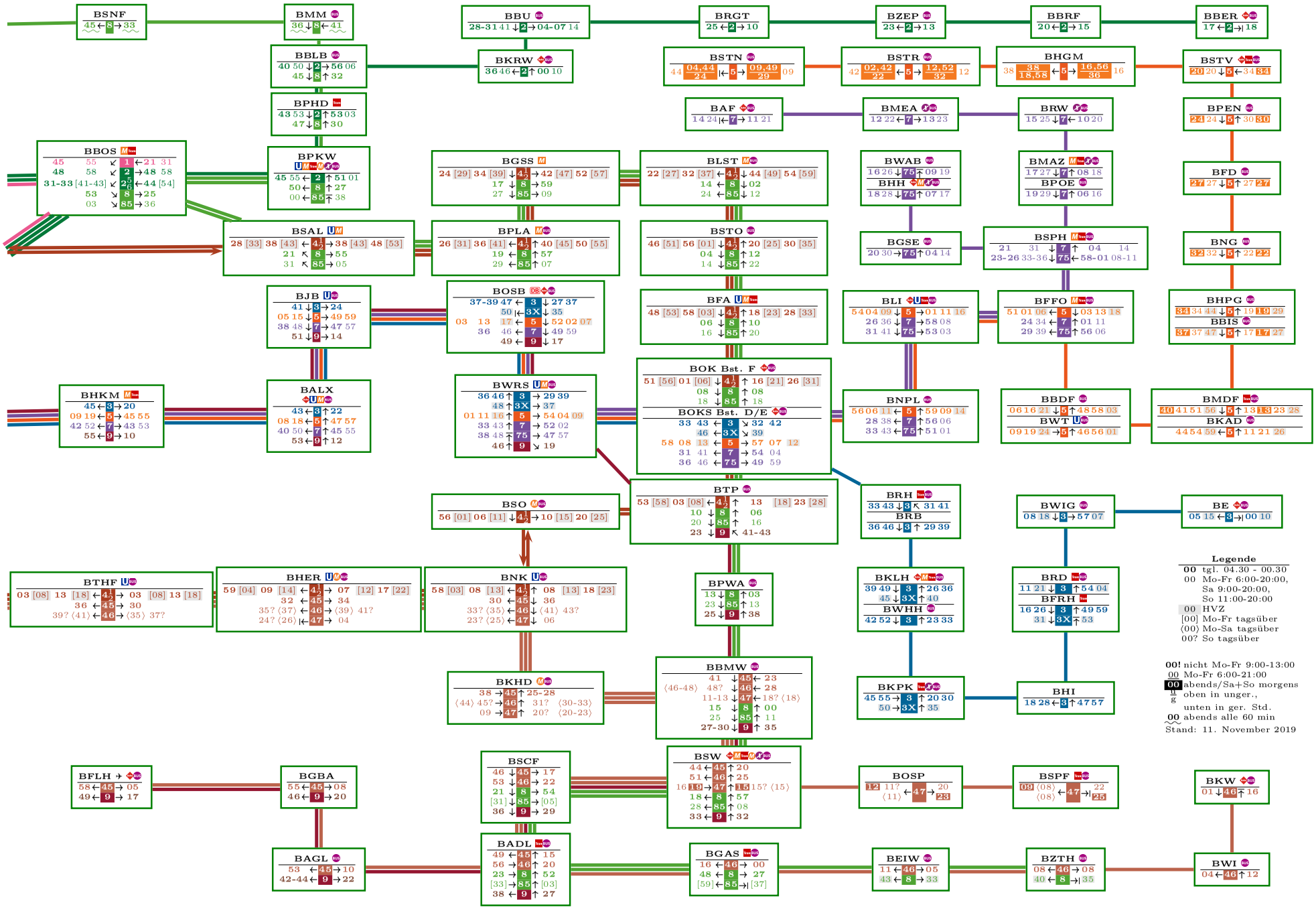
BSNF
BMM
BBU
BRGT
BZEP
BBRF
BBER
BBLB
BKRW
BSTN
BSTR
BHGM
BSTV
BPHD
BAF
BMEA
BRW
BPEN
BBOS
BPKW
BGSS
BLST
BWAB
BHH
BMAZ
BPOE
BFD
BSAL
BPLA
BSTO
BGSE
BSPH
BNG
BJB
BOSB
BFA
BLI
BFFO
BHPG
BBIS
BHKM
BALX
BWRS
BOK Bst. F
BOKS Bst. D/E
BNPL
BBDF
BWT
BMDF
BKAD
BTP
BRH
BRB
BWIG
BE
BSO
BTHF
BHER
BNK
BPWA
BKLH
BWHH
BRD
BFRH
BKHD
BBMW
BKPK
BHI
Legende
00 tgl. 04.30 - 00.30
00 Mo-Fr 6:00-20:00, Sa 9:00-20:00, So 11:00-20:00
00 HVZ
[00] Mo-Fr tagsüber
⟨00⟩ Mo-Sa tagsüber
00? So tagsüber
00! nicht Mo-Fr 9:00-13:00
00 Mo-Fr 6:00-21:00
00 abends/Sa+So morgens
u oben in unger.,
g unten in ger. Std.
00 abends alle 60 min
Stand: 11. November 2019
BFLH
BGBA
BSCF
BSW
BOSP
BSPF
BKW
BAGL
BADL
BGAS
BEIW
BZTH
BWI

S1 P (Mo-Fr)

BWSS	00:14	00:34	00:54			04:14	20	20:34	20:54	21:14	20	23:54
BZD	00:23	00:43	01:03		04:03	04:23		20:43	21:03	21:23		00:03
BSGV	00:37	00:57	01:17	03:57	04:17	04:37		20:57	21:17	21:37		00:17
BNB	00:54	01:14	01:34	04:14	04:34	04:54		21:14	21:34	21:54		00:34
BGB	00:59	01:19	01:38	04:19	04:39	04:59		21:19	21:39	21:59		00:39
BSNH	01:05	01:24		04:25	04:45	05:05		21:25	21:45	22:05		00:45
BFOH	01:18			04:38	04:58	05:18		21:38	21:58	22:18		00:58
BORB				04:55	05:15	05:35		21:55	22:15	22:35		01:15

S1 P (Sa)

BWSS	00:14	00:34	NV	04:54	20	23:54
BZD	00:23	00:43		05:03		00:03
BSGV	00:37	00:57		05:17		00:17
BNB	00:54	01:14		05:34		00:34
BGB	00:59	01:19		05:39		00:39
BSNH	01:05	01:25		05:45		00:45
BFOH	01:18	01:38		05:58		00:58
BORB	01:35	01:55		06:15		01:15

S1 P (So)

BWSS	00:14	00:34	NV	06:54	20	20:34	20:54	21:14	20	23:54
BZD	00:23	00:43		07:03		20:43	21:03	21:23		00:03
BSGV	00:37	00:57		07:17		20:57	21:17	21:37		00:17
BNB	00:54	01:14		07:34		21:14	21:34	21:54		00:34
BGB	00:59	01:19		07:39		21:19	21:39	21:59		00:39
BSNH	01:05	01:25		07:45		21:25	21:45	22:05		00:45
BFOH	01:18	01:38		07:58		21:38	21:58	22:18		00:58
BORB	01:35	01:55		08:15		21:55	22:15	22:35		01:15

S1 P (Mo-Fr)

BORB	00:11	00:31				04:11	20	23:51
BFOH	00:28	00:48			04:08	04:28		00:08
BGB	00:47	01:07		04:07	04:27	04:47		00:27
BPOP	00:59	01:19	03:59	04:19	04:39	04:59		00:39
BSGV	01:12	01:28	04:08	04:28	04:48	05:08		00:48
BZD	01:26		04:22	04:42	05:02	05:22		01:02
BWSS			04:31	04:51	05:11	05:31		01:11

S1 P (Sa)

BORB	00:11	00:31	00:51	NV	04:11		04:41	05:11	20	23:51
BFOH	00:28	00:48	01:08		04:28		04:58	05:28		00:08
BGB	00:47	01:07	01:27		04:47	05:07	05:23	05:47		00:27
BPOP	01:09	01:19	01:39		04:59	05:19	05:39	05:59		00:39
BSGV	01:18		01:48		05:08	05:28	05:48	06:08		00:48
BZD	01:32		02:02		05:22	05:42	06:02	06:22		01:02
BWSS	01:41		02:11		05:31	05:51	06:11	06:31		01:11

S1 P (So)

BORB	00:11	00:31	00:51	NV	06:11		06:41	07:11	20	23:51
BFOH	00:28	00:48	01:08		06:28		06:58	07:28		00:08
BGB	00:47	01:07	01:27		06:47	07:07	07:23	07:47		00:27
BPOP	01:09	01:19	01:39		06:59	07:19	07:39	07:59		00:39
BSGV	01:18		01:48		07:08	07:28	07:48	08:08		00:48
BZD	01:32		02:02		07:22	07:42	08:02	08:22		01:02
BWSS	01:41		02:11		07:31	07:51	08:11	08:31		01:11

S1 PI (Mo-Fr)

BWSS		05:24	20	21:04
BZD	05:13	05:33		21:13
BGB	05:49	06:09		21:49
BWAI	06:03	06:23		22:03
BFOH	06:08	06:28		22:08

S1 PI (abends,So-Do)

BWSS	21:24					
BZD	21:33	21:53	22:13	20	22:53	23:13
BGB	22:09	22:29	22:48		23:28	23:48
BWAI	22:23	22:43				
BFOH						

S1 PI (abends,Fr-Sa)

BWSS	21:24					
BZD	21:33	20	22:13	20	22:53	23:13
BGB	22:09		22:49		23:29	23:48
BWAI	22:23		23:03		23:43	
BFOH	22:28		23:08			

S1 PI (Sa)

BWSS		08:04	20	21:04
BZD	07:53	08:13		21:13
BGB	08:29	08:49		21:49
BWAI	08:43	09:03		22:03
BFOH	08:48	09:08		22:08

S1 PI (So)

BWSS		09:44	20	21:04
BZD	09:33	09:53		21:13
BGB	10:09	10:29		21:49
BWAI	10:23	10:43		22:03
BFOH	10:28	10:48		22:08

S1 PII (Mo-Fr HVZ)

BWSS	06:49	20	07:29			14:49		
BZD	06:59		07:39	20	09:39	14:59	20	18:39
BPOP	07:21		08:01		10:01	15:21		19:01

S1 PII (Mo-Fr HVZ)

BPOP	07:34	20	09:14	09:34	14:54	20	18:14	18:44	20	19:24
BZD	07:56		09:36	09:57	15:16		18:36	19:07		19:47
BWSS				10:06				19:16		19:56

S1 PI (Mo-Fr)

BFOH				05:38	20	19:58
BWAI		05:03	20	05:43		20:03
BGB		05:17		05:57		20:17
BNB		05:22		06:02		20:22
BPOP	05:09	05:29		06:09		20:29
BZD	05:32	05:52		06:32		20:52
BWSS	05:41	06:01		06:41		21:01

S1 PI (abends, Mo-Do)

BFOH	20	21:38						
BWAI		21:43						
BGB		21:57		22:37	20	23:17	20	23:57
BNB		22:02	20	22:42		23:22		00:02
BPOP		22:09		22:49		23:29		00:09
BZD		22:32		23:12		23:52		
BWSS				23:21		00:01		

S1 PI (abends,Fr)

BFOH	20	22:18	22:38		
BWAI		22:23	22:43		
BGB		22:37	22:57	20	23:57
BNB		22:42	23:02		00:02
BPOP		22:49	23:09		00:09
BZD		23:12	23:32		
BWSS		23:21	23:41		

S1 PI (Sa)

BFOH				08:18	20	19:58	20	22:18	22:38			
BWAI		07:43	20	08:23		20:03		22:23	22:43			
BGB		07:57		08:37		20:17		22:37	22:57	23:17	23:42	00:02
BNB		08:02		08:42		20:22		22:42	23:02	23:22	23:47	00:07
BPOP	07:49	08:09		08:49		20:29		22:49	23:09	23:29	23:54	00:14
BZD	08:12	08:32		09:12		20:52		23:12	23:32	23:52		
BWSS	08:21	08:41		09:21		21:01		23:21	23:41	00:01		

S1 PI (So)

BFOH				09:58	20	19:58	20	21:38						
BWAI		09:23	20	10:03		20:03		21:43						
BGB		09:37		10:17		20:17		21:57	20	22:37	22:57	23:17	23:42	00:02
BNB		09:42		10:22		20:22		22:02		22:42	23:02	23:22	23:47	00:07
BPOP	09:29	09:49		10:29		20:29		22:09		22:49	23:09	23:29	23:54	00:14
BZD	09:52	10:12		10:52		20:52		22:32		23:12	23:32	23:52		
BWSS	10:01	10:21		11:01		21:01				23:21	23:41	00:01		

S2 W (Mo-Fr) / **(Fr)**

										(Fr)
BBFD	00:04	00:24			04:04	20	23:04	23:24	23:44	23:24
BSKV	00:26	00:46		04:06	04:26		23:26	23:46	00:06	23:46
BAHU	00:32	00:52		04:12	04:32		23:32	23:52	00:12	23:52
BPOP	00:34	00:54		04:14	04:34		23:34	23:54	00:14	23:54
BNB	00:42	01:02		04:22	04:42		23:42	00:02	00:22	00:02
BGB	00:48	01:06	04:06	04:26	04:46		23:46	00:06	00:26	00:06
BBU o	01:06	01:27	04:24	04:44	05:04		00:04	00:24	00:44	00:24
BBU	01:07		04:27	04:47	05:07		00:07	00:27	00:47	00:25
BBER o	01:17		04:38	04:58	05:18		00:18	00:38	00:58	00:35

S2 W (Sa)

BBFD	00:04	00:14	NV	04:16	04:44	20	19:44	20:04	20	20:44	21:04	20	23:04	23:24	23:44
BSKV	00:26	00:36		04:38	05:06		20:06	20:26		21:06	21:26		23:26	23:46	00:06
BAHU	00:32	00:42		04:44	05:12		20:12	20:32		21:12	21:32		23:32	23:52	00:12
BPOP	00:34	00:44		04:46	05:14		20:14	20:34		21:14	21:34		23:34	23:54	00:14
BNB	00:42	00:52		04:54	05:22		20:22	20:42		21:22	21:42		23:42	00:02	00:22
BGB	00:46	00:56		04:58	05:26		20:26	20:46		21:26	21:46		23:46	00:06	00:26
BBU o		01:14		05:15	05:44		20:44	21:04		21:44	22:04		00:04	00:24	00:44
BBU		01:15		05:27	05:47		20:47	21:07		21:47	22:07		00:07	00:25	00:47
BBER o		01:25		05:38	05:58		20:58	21:18		21:58	22:18		00:18	00:35	00:58

S2 W (So)

BBFD	00:04	00:14	NV	06:16	06:44	20	21:24	21:44	22:04	22:24	22:44	23:04	23:24	23:44
BSKV	00:26	00:36		06:38	07:06		21:46	22:06	22:26	22:46	23:06	23:26	23:46	00:06
BAHU	00:32	00:42		06:44	07:12		21:52	22:12	22:32	22:52	23:12	23:32	23:52	00:12
BPOP	00:34	00:44		06:46	07:14		21:54	22:14	22:34	22:54	23:14	23:34	23:54	00:14
BNB	00:42	00:52		06:54	07:22		22:02	22:22	22:42	23:02	23:22	23:42	00:02	00:22
BGB	00:46	00:56		06:58	07:26		22:06	22:26	22:46	23:06	23:26	23:46	00:06	00:26
BBU o		01:14		07:15	07:44		22:24	22:44	23:04	23:24	23:44	00:04	00:24	00:44
BBU		01:15		07:27	07:47		22:27	22:47	23:07	23:27	23:47	00:07	00:27	00:47
BBER o		01:25		07:38	07:58		22:38	22:58	23:18	23:38	23:58	00:18	00:38	00:58

S2 W (Mo-Fr) / **(Fr)**

									(Fr)	(Fr)
BBER	00:17	00:37		03:57	20	23:17	23:37	23:57	23:37	23:57
BGB	00:50	01:10		04:30		23:50	00:10	00:30	00:10	00:37
BNB	00:54	01:14		04:34		23:54	00:14	00:34	00:14	00:42
BPOP	01:02	01:21	04:22	04:42		00:02	00:22	00:42	00:22	00:54
BSKV	01:10		04:29	04:49		00:09	00:29	00:49	00:29	01:02
BLRD			04:44	05:04		00:24	00:44	01:04	00:44	01:16
BBFD			04:51	05:11		00:31	00:51	01:11	00:53	01:23

S2 W (Sa)

BBER	00:37	NV	03:33	03:57		04:33	04:57	20	19:17	19:37	20	20:17	20:37	20	23:17	23:37	23:57
BGB	01:10		04:07	04:30	04:50	05:10	05:30		19:50	20:10		20:50	21:10		23:50	00:10	00:37
BNB	01:14		04:12	04:34	04:54	05:14	05:34		19:54	20:14		20:54	21:14		23:54	00:14	00:42
BPOP	01:24		04:22	04:42	05:02	05:22	05:42		20:02	20:22		21:02	21:22		00:02	00:22	00:54
BSKV	01:32		04:30	04:49	05:09	05:29	05:49		20:09	20:29		21:09	21:29		00:09	00:29	01:02
BLRD	01:46		04:44	05:04	05:24	05:44	06:04		20:24	20:44		21:24	21:44		00:24	00:44	01:06
BBFD	01:53		04:51	05:11	05:31	05:51	06:11		20:31	20:51		21:31	21:51		00:31	00:53	01:23

S2 W (So)

BBER	00:37	NV	05:33	05:57		06:33	06:57	20	20:37	20:57	21:17	20	23:57
BGB	01:10		06:07	06:30	06:50	07:10	07:30		21:10	21:30	21:50		00:30
BNB	01:14		06:12	06:34	06:54	07:14	07:34		21:14	21:34	21:54		00:34
BPOP	01:24		06:22	06:42	07:02	07:22	07:42		21:22	21:42	22:02		00:42
BSKV	01:32		06:30	06:49	07:09	07:29	07:49		21:29	21:49	22:09		00:49
BLRD	01:46		06:44	07:04	07:24	07:44	08:04		21:44	22:04	22:24		01:04
BBFD	01:53		06:51	07:11	07:31	07:51	08:11		21:51	22:11	22:31		01:11

S2 WI (Mo-Fr) / **S2 WI (Fr)**

								(Fr)	(Fr)	(Fr)	(Fr)
BLRD			05:02	05:22	20	21:22	21:42	21:42	20	22:22	22:42
BAHU		05:02	05:22	05:42		21:42	22:02	22:02		22:42	23:02
BPOP	04:44	05:04	05:24	05:44		21:44	22:04	22:04		22:44	23:04
BGB	04:56	05:16	05:36	05:56		21:56	22:16	22:16		22:56	23:16
BBU	05:14	05:34	05:54	06:14		22:14		22:34		23:14	

S2 WI (Sa)

BLRD		07:42	20	22:22	22:42
BAHU	07:42	08:02		22:42	23:02
BPOP	07:44	08:04		22:44	23:04
BGB	07:56	08:16		22:56	23:16
BBU	08:14	08:34		23:14	

S2 WI (So)

BLRD	09:22	20	21:22	21:42
BAHU	09:42		21:42	22:02
BPOP	09:44		21:44	22:04
BGB	09:56		21:56	22:16
BBU	10:14		22:14	

S2 WI (Mo-Fr) / **S2 WI (Fr)**

						(Fr)	(Fr)	(Fr)	(Fr)
BBU	04:21	05:01	20	21:41	21:59	22:01	20	22:41	22:59
BGB	04:40	05:20		22:00	22:17	22:20		23:00	23:17
BAHU	04:54	05:34		22:14		22:34		23:14	
BLRD		05:55		22:35		22:55		23:35	

S2 WI (Sa)

BBU		08:01	20	22:41	22:59
BGB	08:00	08:20		23:00	23:17
BAHU	08:14	08:34		23:14	
BLRD	08:35	08:55		23:35	

S2 WI (So)

BBU			10:01	20	21:41	21:59
BGB	09:40	20	10:20		22:00	22:17
BAHU	09:54		10:34		22:14	
BLRD	10:15		10:55		22:35	

S25 V (Mo-Fr)

BTLS	00:05	00:25	00:45			04:05	20	23:45
BAHU	00:27	00:47	01:07		04:07	04:27		00:07
BPOP	00:29	00:49	01:09		04:09	04:29		00:09
BNB	00:37	00:57			04:17	04:37		00:17
BSNH	00:48	01:08			04:28	04:48		00:28
BTG	00:58	01:17			04:38	04:58		00:38
BHLS	01:04			04:34	04:44	05:04		00:44
BHD	01:07			04:37	04:47	05:07		00:47

S25 V (Sa)

BTLS	00:05	00:25	00:44	NV	04:45	20	23:45
BAHU	00:27	00:47	01:07		05:07		00:07
BPOP	00:29	00:49	01:09		05:09		00:09
BNB	00:37	00:57			05:17		00:17
BSNH	00:48	01:08			05:28		00:28
BTG	00:58	01:18			05:38		00:38
BHLS	01:04	01:24			05:44		00:44
BHD	01:07	01:27			05:47		00:47

S25 V (So)

BTLS	00:05	00:25	00:44	NV		06:25	20	23:45
BAHU	00:27	00:47	01:07			06:47		00:07
BPOP	00:29	00:49	01:09		06:39	06:49		00:09
BNB	00:37	00:57			06:47	06:57		00:17
BSNH	00:48	01:08			07:01	07:08		00:28
BTG	00:58	01:18				07:18		00:38
BHLS	01:04	01:24				07:24		00:44
BHD	01:07	01:27				07:27		00:47

S25 V (Mo-Fr) / **Fr**

									Fr
BHD	00:08	00:28	00:38				04:08	20	23:48	23:48
BHLS	00:11	00:31	00:41				04:11		23:51	23:51
BTG	00:18	00:38				04:08	04:18		23:58	23:58
BSNH	00:28	00:48				04:18	04:28		00:08	00:08
BNB	00:39	00:59			04:19	04:29	04:39		00:19	00:19
BPOP	00:47	01:07			04:27	04:36	04:47		00:27	00:27
BLIS	01:08	01:27		04:37	04:48		05:08		00:48	00:47
BTLS	01:11			04:41	04:51		05:11		00:51	00:51

S25 V (Sa)

BHD	00:08	20	00:48	NV		05:08	20	23:28	23:48
BHLS	00:11		00:51			05:11		23:31	23:51
BTG	00:18		00:58			05:18		23:38	23:58
BSNH	00:28		01:08			05:28		23:48	00:08
BNB	00:39		01:19			05:39		23:59	00:19
BPOP	00:47		01:27		05:27	05:47		00:07	00:27
BLIS	01:08		01:48		05:48	06:08		00:28	00:47
BTLS	01:11		01:51		05:51	06:11		00:31	00:51

S25 V (So)

BHD	00:08	20	00:48	NV		07:08	20	23:48
BHLS	00:11		00:51			07:11		23:51
BTG	00:18		00:58			07:18		23:58
BSNH	00:28		01:08		07:08	07:28		00:08
BNB	00:39		01:19		07:19	07:39		00:19
BPOP	00:47		01:27		07:27	07:47		00:27
BLIS	01:08		01:48		07:48	08:08		00:48
BTLS	01:11		01:51		07:51	08:11		00:51

S26 VI (Mo-Fr)

BTLS			05:35	20	19:35	19:55	20	20:35	20	21:15
BLIS		05:18	05:38		19:38	19:58		20:38		21:18
BPOP		05:39	05:59		19:59	20:19		20:59		
BNB	05:27	05:47	06:07		20:07	20:27				
BWAI	05:46	06:06	06:26		20:26					

S26 VI (Sa)

BTLS	08:15	20	19:35	19:55	20	20:35
BLIS	08:18		19:38	19:58		20:38
BPOP	08:39		19:59	20:19		
BNB			20:07	20:27		
BWAI						

S26 VI (So)

BTLS	11:15	20	19:55	20	20:35
BLIS	11:18		19:58		20:38
BPOP	11:39		20:19		
BNB					
BWAI					

S26 VI (Mo-Fr)

BWAI				05:50	20	20:10	20:30
BNB		05:09	20	06:09		20:29	20:49
BPOP		05:17		06:17		20:37	
BLIS	05:18	05:38		06:38		20:58	
BTLS	05:21	05:41		06:41		21:01	

S26 VI (Sa)

BWAI						
BNB			08:09	08:29		
BPOP			08:17	08:37	20	19:57
BLIS	07:58	20	08:38	08:58		20:18
BTLS	08:01		08:41	09:01		20:21

S26 VI (So)

BWAI						
BNB			11:09	11:29		
BPOP			11:17	11:37	20	19:57
BLIS	10:58	20	11:38	11:58		20:18
BTLS	11:01		11:41	12:01		20:21

S3 B (Mo-Fr) / **(abends)**

								(abends)		
BE	00:05	00:25		03:45	04:05	20	22:45	23:05	20	23:45
BKPK	00:20	00:40	03:40	04:00	04:20		23:00	23:20		00:00
BOSB	00:39	00:57	03:59	04:19	04:39		23:19	23:39		00:19
BCHS	01:00		04:20	04:40	05:00		23:40	00:00		00:40
BWKS	01:03		04:23	04:43	05:03		23:43	00:03		00:43
BSPA	|		|	|	05:17		23:57	|		|
BGWD	01:05		04:25	04:45				00:05		00:45

S3 B (Sa)

BE	00:05	00:25	NV	04:25	20	06:05	20	22:45
BKPK	00:20	00:40		04:40		06:20		23:00
BOSB	00:39	00:57		04:59		06:39		23:19
BCHS	01:00			05:20		07:00		23:40
BWKS	01:03					07:03		23:43
BSPA	|					07:17		23:57
BGWD	01:05							

S3 B (So)

BE	00:05	00:25	NV	06:25	20	08:05	20	22:45
BKPK	00:20	00:40		06:40		08:20		23:00
BOSB	00:39	00:57		06:59		08:39		23:19
BCHS	01:00			07:20		09:00		23:40
BWKS	01:03					09:03		23:43
BSPA	|					09:17		23:57
BGWD	01:05							

S3 BII (Schultage)

BFRH	06:11	20	08:51	14:21	20	18:21
BOSB	06:30		09:10	14:40		18:40

S3 B (Mo-Fr)

BGWD	00:18	00:38		03:58	20	04:58			
BSPA	|	|		|		|	05:08	20	23:48
BWKS	00:22	00:42		04:02		05:02	05:22		00:02
BCHS	00:24	00:44		04:04		05:04	05:24		00:04
BOSB	00:47	01:07	04:07	04:27		05:27	05:47		00:27
BKPK	01:05	01:24	04:25	04:45		05:45	06:05		00:45
BE	01:20		04:40	05:00		06:00	06:20		01:00

S3 B (Sa)

BGWD	00:18	00:38		04:58	05:18				
BSPA	|	|		|	|		07:08	20	23:48
BWKS	00:22	00:42		05:02	05:22		07:22		00:02
BCHS	00:24	00:44		05:04	05:24	20	07:24		00:04
BOSB	00:47	01:07	NV	05:27	05:47		07:47		00:27
BKPK	01:05	01:25		05:45	06:05		08:05		00:45
BE	01:20	01:40		06:00	06:20		08:20		01:00

S3 B (So)

BGWD	00:18	00:38		06:58	07:18				
BSPA	|	|		|	|		09:08	20	23:48
BWKS	00:22	00:42		07:02	07:22		09:22		00:02
BCHS	00:24	00:44		07:04	07:24	20	09:24		00:04
BOSB	00:47	01:07	NV	07:27	07:47		09:47		00:27
BKPK	01:05	01:25		07:45	08:05		10:05		00:45
BE	01:20	01:40		08:00	08:20		10:20		01:00

S3 BII (Schultage)

BOSB	06:15	20	08:15	13:45	20	17:45	18:05	18:25
BFRH	06:33		08:33	14:03		18:03	18:24	18:44
BE							18:35	18:55

S3 BI (Mo-Fr)

BE	04:35	20	08:55		14:15	20	20:15			23:35
BFRH	04:46		09:06	20	14:26		20:26	20	23:26	23:46
BOSB	05:07		09:27		14:47		20:47		23:47	00:07

S3 BI (Sa)

BE	06:35	20	07:35			23:35
BFRH	06:46		07:46	20	23:26	23:46
BOSB	07:07		08:07		23:47	00:07

S3 BI (So)

BE	08:35	20	09:35			23:35
BFRH	08:46		09:46	20	23:26	23:46
BOSB	09:07		10:07		23:47	00:07

S3 BI (Mo-Fr)

BOSB	04:57	20	08:17	20	13:37	20	19:37	20	22:57	20	23:57
BFRH	05:19		08:39		13:59		19:59		23:19		00:19
BE	05:30		08:50		14:10		20:10		23:30		00:30

S3 BI (Sa)

BOSB	07:17	20	22:57	20	23:57
BFRH	07:39		23:19		00:19
BE			23:30		00:30

S3 BI (So)

BOSB	09:17	20	22:57	20	23:57
BFRH	09:39		23:19		00:19
BE			23:30		00:30

S41 A (Mo-Fr)																	S41 A (Sa)					S41 A (So)				
BSKR	00:06	00:16	00:26	00:36	00:46	00:56	01:09	01:16							04:16	10	23:56	00:06	00:16	NV	05:16	10	23:56	00:06	00:16	NV	06:06	10	23:56
BBUP	00:11	00:21	00:31	00:41	00:51	01:01	01:14	01:21						04:11	04:21		00:01	00:11	00:21		05:21		00:01	00:11	00:21		06:11		00:01
BHAL	00:17	00:27	00:37	00:47	00:57	01:07	01:20	01:27						04:17	04:27		00:07	00:17	00:27		05:27		00:07	00:17	00:27		06:17		00:07
BWES	00:22	00:32	00:42	00:52	01:03	01:12	01:25					04:02	10	04:22	04:32		00:12	00:22	00:32		05:32		00:12	00:22	00:32		06:22		00:12
BGB	00:35	00:45	00:55	01:05	01:16		01:38			03:55	10	04:15		04:35	04:45		00:25	00:35	00:45		05:45		00:25	00:35	00:45		06:35		00:25
BGSS	00:42	00:52	01:02	01:12	01:22				03:52	04:02		04:22		04:42	04:52		00:32	00:42	00:52		05:52		00:32	00:42	00:52		06:42		00:32
BOK	00:54	01:01	01:14	01:20					04:01	04:11		04:31		04:51	05:01		00:41	00:51	01:01		06:01		00:41	00:51	01:01		06:51		00:41
BSKR	01:09	01:15	01:28						04:15	04:25		04:45		05:05	05:15		00:55	01:05	01:15		06:15		00:55	01:05	01:15		07:05		00:55

S42 R (Mo-Fr)																	S42 R (Sa)					S42 R (So)				
BSKR	00:00	10	00:20	00:30	10	00:50	01:00	01:10	01:20						04:00	10	23:50	00:00	00:10	NV	05:10	10	23:50	00:00	00:10	NV	06:40	10	23:50
BHER	00:07		00:27	00:37		00:57	01:07	01:17	01:26					03:57	04:07		23:57	00:07	00:17		05:17		23:57	00:07	00:17		06:47		23:57
BOK	00:16		00:36	00:46		01:06	01:16	01:26					03:56	04:06	04:16		00:06	00:16	00:26		05:26		00:06	00:16	00:26		06:56		00:06
BGSS	00:24		00:44	00:54		01:14	01:24	01:34				03:54	04:04	04:14	04:24		00:14	00:24	00:34		05:34		00:14	00:24	00:34		07:04		00:14
BGB	00:31		00:51	01:01		01:21	01:30					04:01	04:11	04:21	04:31		00:21	00:31	00:41		05:41		00:21	00:31	00:41		07:11		00:21
BWES	00:43		01:03	01:13		01:33					04:03	04:13	04:23	04:33	04:43		00:33	00:43	00:53		05:53		00:33	00:43	00:53		07:23		00:33
BHAL	00:49		01:09	01:19						03:58	04:09	04:19	04:29	04:39	04:49		00:39	00:49	00:59		05:59		00:39	00:49	00:59		07:29		00:39
BBUP	00:55		01:15	01:24						04:05	04:15	04:25	04:35	04:45	04:55		00:45	00:55	01:05		06:05		00:45	00:55	01:05		07:35		00:45
BSKR	01:00		01:20							04:10	04:20	04:30	04:40	04:50	05:00		00:50	01:00	01:10		06:10		00:50	01:00	01:10		07:40		00:55

S41 AI (Mo-Fr)																							
BSKR				05:21	10	09:41	10	10:11	10:21	10	10:41			13:31	10	19:41	10	20:01	10	20:21	20:31	20:41	21:01
BBUP		05:06	10	05:26		09:46		10:16	10:26		10:46		13:26	13:36		19:46		20:06		20:26	20:36	20:46	21:06
BWES	05:07	05:17		05:37		09:57		10:27	10:37		10:57	13:27	13:37	13:47		19:57		20:17		20:37	20:47	20:57	21:17
BGB	05:20	05:30		05:50		10:10		10:40	10:50		11:10	13:40	13:50	14:00		20:10		20:30		20:50	21:00		
BGSS	05:27	05:37		05:57		10:17		10:47				13:47	13:57	14:07		20:17		20:37		20:57	21:06		
BHER	05:44	05:54		06:14		10:34		11:04				14:04	14:14	14:24		20:34		20:54		21:14			
BTHF	05:48	05:58		06:18		10:38						14:08	14:18	14:28		20:38		20:58		21:18			
BSKR	05:50	06:00		06:20		10:40						14:10	14:20	14:30		20:40		21:00					

S42 RI (Mo-Fr)																				
BSKR						05:45		06:05	10	10:15	10:25					14:25	10	20:15	10	20:35
BTHF				05:28	10	05:48	10	06:08		10:18	10:28			13:48	10	14:28		20:18		20:38
BHER			05:22	05:32		05:52		06:12		10:22	10:32			13:52		14:32		20:22		20:42
BGSS		05:30	05:39	05:49		06:09		06:29		10:39	10:49		13:59	14:09		14:49		20:39		20:59
BGB		05:37	05:46	05:56		06:16		06:36		10:46	10:56	13:56	14:06	14:16		14:56		20:46		21:06
BWES	05:28	05:49	05:58	06:08		06:28		06:48		10:58	11:08	14:08	14:18	14:28		15:08		20:58		21:18
BBUP	05:40	06:00	06:10	06:20		06:40		07:00		11:10	11:19	14:20	14:30	14:40		15:20		21:10		21:30
BSKR	05:45	06:05	06:15	06:25		06:45		07:05		11:15		14:25	14:35	14:45		15:25		21:15		

S45 U (Mo-Fr)							S45 U (Sa)							S45 U (So)					
BGAS			04:51						04:51					06:24					
BFLH			|	05:05	20	23:45			|	05:05	05:25	20	23:45	|			07:05	20	23:45
BSW	04:22	04:42	05:00	05:20		00:00	04:31	04:52	05:00	05:20	05:40		00:00	06:30	06:53	07:02	07:20		00:00
BTHF	04:36	04:56	05:16	05:36		00:16	04:46	05:06	05:15	05:35	05:56		00:16	06:46	07:06	07:16	07:36		00:16
BSKR	04:38	04:58	05:18	05:38		00:18					05:58		00:18			07:18	07:38		00:18

S45 U (Mo-Fr)									S45 U (Sa)										S45 U (So)									
BSKR	00:08	00:28		04:48	20	23:08	23:28	23:48	00:08	00:28				06:08	20	23:08	23:28	23:48	00:08	00:28				07:28	20	23:08	23:28	23:48
BTHF	00:10	00:30		04:50		23:10	23:30	23:50	00:10	00:30		04:50	20	06:10		23:10	23:30	23:50	00:10	00:30		06:50	20	07:30		23:10	23:30	23:50
BSW	00:23	00:43	04:44	05:04		23:24	23:43	00:04	00:23	00:43	04:33	05:04		06:24		23:24	23:43	00:04	00:23	00:43	06:33	07:04		07:44		23:24	23:43	00:04
BFLH			04:58	05:18		23:38		|			04:47	05:18		06:38		23:38		|			06:47	07:18		07:58		23:38		|
BGAS								00:12										00:12										00:12

S46 D (Mo-Fr)													Fr	(D → AI)		S46 D (Sa)												S46 D (So)										
BKW	00:01	00:21	00:41	01:01		04:01	20	21:01	21:21	21:41	20	23:41	21:21			00:01	00:21	NV	04:41	05:01	20	11:41	20	18:41	20	23:41	00:01	00:21	NV	06:21	20	11:41	20	18:41	20	23:41
BGAS	00:16	00:36	00:56	01:16	03:56	04:16		21:16	21:36	21:56		23:56	21:36	04:53	05:13	00:16	00:36		04:56	05:16		11:56		18:56		23:56	00:16	00:36		06:36		11:56		18:56		23:56
BTHF	00:39	00:58	01:18		04:21	04:41		21:41	22:01	22:21		00:19	22:01	05:18	05:38	00:39	00:59		05:19	05:39		12:19		19:19		00:19	00:39	00:59		06:59		12:19		19:19		00:19
BSKR	00:41				04:23	04:43		21:43	22:03	22:23		00:21	22:03	05:20	05:40	00:41	01:01		05:21	05:41		12:21		19:21		00:21	00:41	01:01		07:01		12:21		19:21		00:21
BWES					04:39	04:59		21:59	22:19	22:39		00:37	22:19							05:57		12:38		19:38		00:37				07:17		12:38		19:38		00:37
BGB																						12:50		19:50								12:50		19:50		

S46 D (Mo-Fr)														(Fr)				(RI → D)			
BGB					04:36																
BWES	00:16	00:36			04:53	20	20:16	20:36	20:56	21:16	21:36	20	23:36	23:56	20:36	20:56	21:17	23:56				
BSKR	00:33	00:53			04:55		20:33	20:53	21:13	21:33	21:53		23:53	00:13	20:53	21:13	21:33	00:13	10:45	11:05	20:45	21:05
BTHF	00:35	00:55	03:55	20	05:20		20:35	20:55	21:15	21:35	21:55		23:55	00:15	20:55	21:15	21:35	00:15	10:48	11:08	20:48	21:08
BGAS	01:00	01:19	04:20		05:36		21:00	21:20	21:40	22:00	22:20		00:20	00:40	21:20	21:40	22:00	00:40	11:10	11:30	21:10	21:30
BKW	01:16		04:36				21:16	21:36	21:56	22:16	22:36		00:36	00:56	21:36	21:56	22:16	00:58				

S46 D (Sa)																	S46 D (So)													
BGB										13:05	20	20:05												13:05	20	20:05		
BWES	00:16	00:36						05:58	20	13:18		20:18	20	23:38	23:58	00:18	00:36					07:18	20	13:18		20:18	20	23:58
BSKR	00:33	00:57	NV	04:27	04:57	05:15	20	06:15		13:35		20:35		23:55	00:15	00:35	00:57	NV	06:27	06:55	20	07:35		13:35		20:35		00:15
BTHF	00:35	00:59		04:30	05:00	05:17		06:17		13:37		20:37		23:57	00:17	00:37	01:00		06:30	06:57		07:37		13:37		20:37		00:17
BGAS	01:00	01:22		05:00	05:22	05:40		06:40		14:00		21:00		00:20	00:40	01:00	01:22		07:00	07:20		08:00		14:00		21:00		00:40
BKW	01:16	01:38		05:16	05:38	05:56		06:56		14:16		21:16		00:36	00:58	01:16	01:38		07:16	07:36		08:16		14:16		21:16		00:56

S47 K (Mo-Fr)												S47 K (Sa)							S47 K (So)						
	morgens								abends																
BSPF	00:09	20	01:09	04:09	20	04:49	05:08	20	20:28	20:49	20	23:49	05:09	20	06:09	06:28	06:48	20	20:28	07:09	20	08:09	08:28	08:48	20	20:28
BSW	00:15		01:15	04:15		04:55	05:15		20:35	20:55		23:55	05:15		06:15	06:34	06:55		20:35	07:15		08:15	08:34	08:55		20:35
BHER							05:26		20:46								07:04		20:44					09:04		20:44

S47 K (Mo-Fr)												S47 K (Sa)						S47 K (So)					
	morgens								abends														
BHER							05:44	20	20:24							07:24	20	20:24				09:24	20	20:24
BSW	00:19	20	01:19	04:19	20	05:39	05:56		20:36	20:59	20	23:59	05:19	20	07:19	07:36		20:36	07:19	20	09:19	09:36		20:36
BSPF	00:25		01:25	04:25		05:45	06:02		20:42	21:05		00:05	05:25		07:25	07:42		20:42	07:25		09:25	09:42		20:42

S5 E (Mo-Fr)										(abends)				S5 E (Sa)																S5 E (So)															
BSTN							04:09	20	20:29		21:09										05:09	20	05:49	40	09:09	20	19:09	40	20:29								07:09	20	07:49	40	11:09	20	19:09	40	20:29
BSTV						04:00	04:20		20:40	20	21:20										05:20		06:00	20	09:20		19:20	20	20:40								07:20		08:00	20	11:20		19:20	20	20:40
BMDF	00:01	00:21	00:41		04:01	04:21	04:41		21:01		21:41	20	23:41	00:01	00:21	00:42	NV	04:42	05:01	20	05:41		06:21		09:41		19:41		21:01	00:01	00:21	00:42	NV	06:42	07:01	20	07:41		08:21		11:41		19:41		21:01
BLI	00:14	00:34	00:54	03:54	04:14	04:34	04:54		21:14		21:54		23:54	00:14	00:34	00:54		04:54	05:14		05:54		06:34		09:54		19:54		21:14	00:14	00:34	00:54		06:54	07:14		07:54		08:34		11:54		19:54		21:14
BOSB	00:23	00:43	01:03	04:03	04:23	04:43	05:03		21:23		22:03		00:03	00:23	00:42	01:07		05:02	05:22		06:02		06:42		10:02		20:02		21:22	00:23	00:42	01:07		07:02	07:22		08:02		08:42		12:02		20:02		21:22
BWKS	00:47	01:07	01:27	04:27	04:47	05:07	05:27		21:47		22:27		00:27	00:47				05:27	05:47		06:27		07:07		10:27		20:27		21:27	00:47				07:27	07:47		08:27		09:07		12:27		20:27		21:27
BGWD	00:50	01:10																																											

S5 E (Mo-Fr)											(abends)			Fr	S5 E (Sa)														S5 E (So)													
BGWD					04:04	04:24																																				
BWKS	00:07	00:27	00:37		04:07	04:27	20	19:07	20	19:47	20	23:27	23:47	23:47	00:07						05:07	20	07:47	20	17:47	20	19:47	00:07						07:07	20	09:47	20	17:47	20	19:47
BOSB	00:32	00:52	01:02		04:32	04:52		19:32		20:12		23:32	00:12	00:12	00:32	00:53	01:13	NV	04:52	20	05:32		08:12		18:12		20:12	00:32	00:53	01:13	NV	06:52	20	07:32		10:12		18:12		20:12
BLI	00:41	01:01	01:10	04:21	04:41	05:01		19:41		20:21		00:01	00:21	00:21	00:41	01:05	01:22		05:01		05:41		08:21		18:21		20:21	00:41	01:05	01:22		07:01		07:41		10:21		18:21		20:21
BMDF	00:52	01:13		04:33	04:53	05:13		19:53		20:33		00:12	00:32	00:33	00:52	01:16	01:35		05:13		05:53		08:33		18:33		20:33	00:52	01:16	01:35		07:13		07:53		10:33		18:33		20:33
BSTV		01:34		04:54	05:14	05:34		20:14		20:54				00:54			01:55		05:34		06:14		08:54		18:54		20:54			01:55		07:34		08:14		10:54		18:54		20:54
BSTN		01:44		05:04	05:24	05:44		20:24		21:04				01:04			02:06		05:44		06:24	40	09:04		19:04	40	21:04			02:06		07:44		08:24	40	11:04		19:04	40	21:04

S5 EI (Mo-Fr)													(abends)									Fr	S5 EI (Sa)				S5 EI (So)			
BHPG						05:24	20	09:04		13:04	20	19:44																		
BMDF			04:31	04:51	20	05:31		09:11	20	13:11		19:51	20:11	20:31	20:51	20	21:31	21:49	20	23:09	20:31		06:11	20	19:51		08:11	20	19:51
BLI	04:04	20	04:44	05:04		05:44		09:24		13:24		20:04	20:24	20:44	21:04		21:44	22:04		23:24	20:44	06:04	06:24		20:04	08:04	08:24		20:04
BWRS	04:10		04:50	05:11		05:51		09:31		13:31		20:11	20:30	20:50	21:10		21:50	22:10		23:30	20:50	06:11	06:31		20:11	08:11	08:31		20:11
BOSB				05:13		05:53		09:33		13:33		20:13									20:52	06:13	06:33		20:13	08:13	08:33		20:13
BWKS				05:37		06:17		09:57		13:57		20:37										06:37	06:57		20:37	08:37	08:57		20:37

S5 EI (Mo-Fr)																(abends)								S5 EI (Sa)						S5 EI (So)					
BWKS				05:17	20	07:57	08:17	20	11:37	11:57	20	18:37	18:57	20	19:57	20:17	20:37								06:17	20	19:17	19:37	19:57		08:17	20	19:17	19:37	19:57
BOSB				05:42		08:22	08:42		12:02	12:22		19:02	19:22		20:22	20:42	21:02								06:42		19:42	20:02	20:22		08:42		19:42	20:02	20:22
BWRS	04:24	04:44	20	05:44		08:24	08:44		12:04	12:24		19:04	19:24		20:24	20:44	21:04	21:24	21:44	20	23:04	23:22	23:42	06:24	06:44		19:44	20:04	20:24	08:24	08:44		19:44	20:04	20:24
BLI	04:31	04:51		05:51		08:31	08:51		12:11	12:31		19:11	19:31		20:31	20:51	21:11	21:31	21:51		23:11	23:28	23:48	06:31	06:51		19:51	20:11	20:31	08:31	08:51		19:51	20:11	20:31
BMDF	04:44	05:03		06:03		08:43	09:04		12:24	12:43		19:23	19:42		20:42	21:04	21:22	21:42	22:04		23:24			06:44	07:04		20:04	20:22	20:42	08:44	09:04		20:04	20:22	20:42
BHPG		05:09		06:09		08:49				12:49		19:29																							

S5 EII (Mo-Fr*)							
BMDF	05:56	20	08:16	08:36	14:16	20	17:56
BWRS	06:15		08:36	08:56	14:35		18:15
BOSB			08:37	08:57			

S5 EII (Mo-Fr*)								
BOSB					13:47	14:07		
BWRS		06:29	20	08:09	13:49	14:09	20	18:09
BLI	06:16	06:36		08:16	13:56	14:16		18:16
BMDF	06:28	06:48		08:28	14:08	14:28		18:28

S5 EIII							FS	(Sa)		(So)	
BSTN	00:09		21:49	40	23:09		23:49	04:12	04:49	06:12	06:49
BSTV	00:20	21:40	22:00	20	23:20	23:40	00:00	04:22	05:00	06:22	07:00
BMDF	00:40	22:00	22:20		23:40	00:00	00:20	04:41	05:20	06:41	07:20

S5 EIII (abends)						F-S	(Sa)	(So)
BMDF	00:53	20:53	21:13	20	00:13	00:33	01:17	01:17
BSTV	01:14	21:13	21:34		00:34	00:54	01:36	01:36
BSTN	01:25		21:44	40	00:44	01:04	01:46	01:46

*: Die Zuggruppe EII fährt nur montags bis freitags außerhalb der Sommerferien

S7 O (Mo-Fr)

BAF	00:11	20	00:51			04:11	20	23:51
BLI	00:26		01:06		04:06	04:26		00:06
BCHS	00:57		01:37	04:17	04:37	04:57		00:37
BGWD	01:03		01:42	04:23	04:43	05:03		00:43
BPDH	01:22			04:42	05:02	05:22		01:02

S7 O (Sa)

BAF	00:11	00:31	00:51	NV	04:23	04:51	20	23:51
BLI	00:26	00:46	01:08		04:39	05:06		00:06
BCHS	00:57	01:21	01:51		05:17	05:37		00:37
BGWD	01:03	01:33	02:03		05:23	05:43		00:43
BPDH	01:22	01:52	02:22		05:42	06:02		01:02

S7 O (So)

BAF	00:11	00:31	00:51	NV	06:23	06:51	20	23:51
BLI	00:26	00:46	01:08		06:39	07:06		00:06
BCHS	00:57	01:21	01:51		07:17	07:37		00:37
BGWD	01:03	01:33	02:03		07:23	07:43		00:43
BPDH	01:22	01:52	02:22		07:42	08:02		01:02

S7 O (Mo-Fr)

BPDH	00:01	00:21	00:41			04:01	20	23:41
BGWD	00:22	00:42	01:02		04:02	04:22		00:02
BOSB	00:49	01:09	01:29	04:09	04:29	04:49		00:29
BLI	00:58	01:18		04:18	04:38	04:58		00:38
BAF	01:14			04:34	04:54	05:14		00:54

S7 O (Sa)

BPDH	00:01	00:21	NV	04:11	04:41	20	23:41
BGWD	00:22	00:42		04:32	05:02		00:02
BOSB	00:49	01:09		05:09	05:29		00:29
BLI	00:58	01:20		05:18	05:38		00:38
BAF	01:14	01:35		05:34	05:54		00:54

S7 O (So)

BPDH	00:01	00:21	NV	06:11	06:41	20	23:41
BGWD	00:22	00:42		06:32	07:02		00:02
BOSB	00:49	01:09		07:09	07:29		00:29
BLI	00:58	01:20		07:18	07:38		00:38
BAF	01:14	01:35		07:34	07:54		00:54

S7 OI (Mo-Fr)

BAF				05:01	20	20:01	20:21	20	22:01	20	22:41	23:01
BOSB			05:06	05:26		20:26	20:46		22:26		23:06	23:26
BCHS		05:07	05:27	05:47		20:47	21:07		22:47		23:27	23:47
BWKS		05:10	05:30	05:50		20:50	21:10		22:50		23:30	
BGWD		05:13	05:33	05:53		20:53	21:13		22:53		23:32	
BWSS	05:02	05:23	05:43	06:03		21:03	21:22		23:02			
BPDH	05:12	05:32	05:52	06:12		21:12						

S7 OI (Sa)

BAF				07:01	20	20:01	20:21	20	22:01	20	22:41	23:01
BOSB			07:06	07:26		20:26	20:46		22:26		23:06	23:26
BCHS		07:07	07:27	07:47		20:47	21:07		22:47		23:27	23:47
BWKS		07:10	07:30	07:50		20:50	21:10		22:50		23:30	
BGWD		07:13	07:33	07:53		20:53	21:13		22:53		23:32	
BWSS	07:03	07:23	07:43	08:03		21:03	21:22		23:02			
BPDH	07:12	07:32	07:52	08:12		21:12						

S7 OI (So)

BAF				09:01	20	20:01	20	20:41	21:01
BOSB			09:06	09:26		20:26		20:56	21:16
BCHS		09:07	09:27	09:47		20:47		21:27	21:47
BWKS		09:10	09:30	09:50		20:50		21:30	
BGWD		09:13	09:33	09:53		20:53		21:32	
BWSS	09:03	09:23	09:43	10:03		21:03			
BPDH	09:12	09:32	09:52	10:12		21:12			

S7 OI (Mo-Fr)

BPDH					05:11	20	21:11			
BWSS				05:02	05:22		21:22			
BGWD		04:32	20	05:12	05:32		21:32			
BWKS		04:35		05:15	05:35		21:35	20	22:35	22:55
BOSB		04:59		05:39	05:59		21:59		22:59	23:19
BWRS	04:42	05:02		05:42	06:02		22:02		23:02	
BAF	05:04	05:24		06:04	06:24		22:24		23:24	

S7 OI (Sa)

BPDH					07:11	20	21:11			
BWSS				07:02	07:22		21:22			
BGWD		06:32	20	07:12	07:32		21:32			
BWKS		06:35		07:15	07:35		21:35	20	22:35	22:55
BOSB		06:59		07:39	07:59		21:59		22:59	23:19
BWRS	06:42	07:02		07:42	08:02		22:02		23:02	
BAF	07:04	07.24		08:04	08:24		22:24		23:24	

S7 OI (So)

BPDH					09:11	20	20:11	20:31	20	21:11
BWSS				09:02	09:22		20:22	20:42		21:22
BGWD		08:32	20	09:12	09:32		20:32	20:52		
BWKS		08:35		09:15	09:35		20:35	20:55		
BOSB		08:59		09:39	09:59		20:59	21:19		
BWRS	08:42	09:02		09:42	10:02		21:02			
BAF	09:04	09:24		10:04	10:24		21:24			

S75 T (Mo-Fr)

BWAB	00:16	00:36	00:56		04:16	20	23:56
BHH	00:18	00:38	00:57	03:58	04:18		23:58
BLI	00:31	00:51		04:11	04:31		00:11
BOSB	00:40	01:00		04:20	04:40		00:20

S75 T (Sa)

BWAB	00:16	20	00:56	01:16	NV	04:36	20	23:56
BHH	00:18		00:58	01:18		04:38		23:58
BLI	00:31		01:11	01:31		04:51		00:11
BOSB	00:40		01:20			05:00		00:20

S75 T (So)

BWAB	00:16	20	00:56	01:16	NV	06:36	20	23:56
BHH	00:18		00:58	01:18		06:38		23:58
BLI	00:31		01:11	01:31		06:51		00:11
BOSB	00:40		01:20			07:00		00:20

S75 T (Mo-Fr)

BOSB	00:04	00:24	00:44		04:04	20	23:44
BLI	00:13	00:33	00:53		04:13		23:53
BHH	00:27	00:47	01:06	04:07	04:27		00:07
BWAB	00:29	00:49		04:09	04:29		00:09

S75 T (Sa)

BOSB	00:04	20	01:04		04:44	20	23:44
BLI	00:13		01:13	NV	04:53		23:53
BHH	00:27		01:27		05:07		00:07
BWAB	00:29		01:29		05:09		00:09

S75 T (So)

BOSB	00:04	20	01:04		06:44	20	23:44
BLI	00:13		01:13	NV	06:53		23:53
BHH	00:27		01:27		07:07		00:07
BWAB	00:29		01:29		07:09		00:09

S75 TI (Mo-Fr)

BWAB	05:06	20	08:06	20	13:46	20	20:46
BWRS	05:28		08:28		14:08		21:08
BOSB	05:30		08:30		14:10		21:10

S75 TI (Sa)

BWAB	08:46	20	19:26	19:46
BWRS	09:08		19:48	20:08
BOSB			19:50	

S75 TI (So)

BWAB	10:46	20	19:46
BWRS	11:08		20:08
BOSB			

S75 TI (Mo-Fr)

BOSB			05:34	20	08:34		14:14	20	20:34
BWRS			05:37		08:37	20	14:17		20:37
BLI	05:03	20	05:43		08:43		14:23		20:43
BWAB	05:19		05:59		08:59		14:39		20:59

S75 TI (Sa)

BOSB		08:34	08:54		
BWRS		08:37	08:57	20	19:37
BLI	08:23	08:43	09:03		19:43
BWAB	08:39	08:59	09:19		19:59

S75 TI (So)

BOSB		10:34	10:54		
BWRS		10:37	10:57	20	19:37
BLI	10:23	10:43	11:03		19:43
BWAB	10:39	10:59	11:19		19:59

S8 N (Mo-Do)

BZTH						05:20	20*	09:00					15:00	20*	18:00	20*	19:40
BGAS	00:08	00:28	00:48	04:08	20*	05:28		09:08	20*	13:08	13:28	20*	15:08		18:08		19:48
BPKW	00:47	01:07	01:27	04:47		06:07		09:47		13:47	14:07		15:47		18:47		20:27
BBLB		01:12	01:32	04:52		06:12		09:52		13:52	14:12		15:52		18:52		20:32
BBIW				05:13		06:33		10:13		14:13	14:33		16:13		19:13		20:56

abends

20:08	20	20:48	20	23:48
20:47		21:27		00:27
20:52		21:32		00:32
21:13		21:53	60	00:53

S8 N (Fr)

13:20	20*			
13:28		20*	19:48
14:07			20:27
14:12			20:32
14:33			20:56

S8 N (Sa)

00:08	00:28	NV	04:18	04:48	20	06:48	20*	19:48
00:47	01:07		04:57	05:27		07:27		20:27
00:52	01:12		05:02	05:32		07:32		20:32
			05:23	05:53	60	07:53		20:56

S8 N (So)

00:08	00:28	NV	04:18	04:48	30	06:48	20	07:48	20	08:28	20*	19:48
00:47	01:07		04:57	05:27		07:27		08:27		09:07		20:27
00:52	01:12		05:02	05:32		07:32		08:32		09:12		20:32
			05:23	05:53	60	07:53	60*	08:56		09:33		20:56

*: Die Fahrten zur Minute 32 ab Blankenburg halten zwei Minuten später in Hohen Neuendorf und drei Minuten später in Birkenwerder (Sa/So nur in geraden Stunden).

S8 N (Mo-Do)

BBIW						04:24	20	07:44	20	11:44	12:04	20	13:44	20	16:44	20	18:24	20	20:24
BBLB	00:05	00:25		04:05	04:25	04:45		08:05		12:05	12:25		14:05		17:05		18:45		20:45
BPKW	00:10	00:30	00:50	04:10	04:30	04:50		08:10		12:10	12:30		14:10		17:10		18:50		20:50
BGAS	00:47	01:07	01:27	04:47	05:07	05:27		08:47		12:47	13:07		14:47		17:47		19:27		21:27
BZTH					05:15	05:35		08:55					14:55		17:55		19:35		

abends

20:44		21:24	60	23:24
21:05	20	21:45	20	23:45
21:10		21:50		23:50
21:47		22:27		00:27

S8 N (Fr)

12:04	20		20	18:24
12:25				18:45
12:30				18:50
13:07				19:27
13:15				

S8 N (Sa)

		00:37		04:24	60	07:24	20	20:24
00:05	00:25	00:58		04:45	20	07:45		20:45
00:10	00:30	01:03	NV	04:50		07:50		20:50
00:47	01:07	01:40		05:27		08:27		21:27

S8 N (So)

		00:37		04:34		05:37		06:24	60	08:24		09:04	20	20:24
00:05	00:25	00:58		04:55	05:25	05:58	06:25	06:45	20	08:45	20	09:25		20:45
00:10	00:30	01:03	NV	05:00	05:30	06:03	06:30	06:50		08:50		09:30		20:50
00:47	01:07	01:40		05:37	06:07	06:40	07:07	07:27		09:27		10:07		21:27

S85 NI (Mo-Fr)

BPKW	05:20	20	18:20	20	21:20
BSW	05:48		18:48		21:48
BGAS	05:57		18:57		

S85 NI (Sa)

08:00	20	21:20
08:28		21:48

S85 NI (So)

10:00	20	21:20
10:28		21:48

S85 NI (Mo-Fr)

BGAS		04:59	20	19:19			
BSW	04:49	05:08		19:28	19:49	20	20:49
BPKW	05:18	05:38		19:58	20:18		21:18

S85 NI (Sa)

07:19	07:39		
07:29	07:49	20	20:49
07:58	08:18		21:18

S85 NI (So)

		09:59	10:19		
09:29	20	10:09	10:29	20	20:49
09:58		10:38	10:58		21:18

S9 C (Mo-Fr)

												Fr
BFLH	00:17	20	00:57	01:17			03:57	20	23:37	23:57	23:57
BSW	00:32		01:12	01:32		03:52	04:12		23:52	00:12	00:12
BLI	|		|	|	03:39	|	|		|	|	|
BOSB	00:49		01:29	01:48	03:49	04:09	04:29		00:09	00:29	00:29
BWKS	01:12		01:52		04:13	04:33	04:53		00:33	00:53	00:53
BSPA					04:27	04:47	05:07		00:47	01:07	01:09

S9 C (Sa)

00:17	00:37	NV	04:32	04:57	20	23:37	23:57
00:32	00:52		04:48	05:12		23:52	00:12
|	|		|	|		|	|
00:49	01:09		05:08	05:29		00:09	00:29
01:13	01:40		05:32	05:53		00:33	00:53
01:27	01:54		05:46	06:07		00:47	01:09

S9 C (So)

00:17	00:37	NV	06:32	06:57	20	23:57
00:32	00:52		06:48	07:12		00:12
|	|		|	|		|
00:49	01:09		07:08	07:29		00:29
01:13	01:40		07:32	07:53		00:53
01:27	01:54		07:46	08:07		01:07

S9 C (Mo-Fr)

BSPA	00:18	00:38			03:58	20	23:58
BWKS	00:32	00:52	03:12	20	04:12		00:12
BSW	01:13	01:33	03:53		04:53		00:53
BFLH	01:29		04:09		05:09		01:09

S9 C (Sa)

00:18	00:38	NV	04:36	04:58	20	23:58
00:32	00:52		04:50	05:12		00:12
01:20	01:50		05:33	05:53		00:53
01:36	02:06		05:49	06:09		01:09

S9 C (So)

00:18	00:38	NV	03:36	04:06	30	05:06	05:36	06:06	06:36	06:58	20	23:58
00:32	00:52		03:50	04:20		05:20	05:50	06:20	06:50	07:12		00:12
01:20	01:50		04:50	05:20		06:20	06:50	07:13	07:33	07:53		00:53
01:36	02:06		05:09	05:36		06:36	07:09	07:29	07:49	08:09		01:09

U1 → Uhlandstraße		(tagsüber)	(früh/abends)	(nachts)
WA	S U3 M Mo-Fr HVZ	06 16 26 36 46 56	07 17 27 37 47 57	07 22 37 52
S	U3 Mo-Fr HVZ	08 18 28 38 48 58	09 19 29 39 49 59	09 24 39 54
Gr	U3 M	10 20 30 40 50 00	11 21 31 41 51 01	11 26 41 56
Kbo	U3 U8 Mo-Fr	12 22 32 42 52 02	12 22 32 42 52 02	13 28 43 58
Pr	U3 Mo-Fr	14 24 34 44 54 04	14 24 34 44 54 04	15 30 45 00
Ho	U3 U6 M Mo-Fr HVZ	16 26 36 46 56 06	16 26 36 46 56 06	17 32 47 02
Mo	U3 U7	17 27 37 47 57 07	18 28 38 48 58 08	18 33 48 03
Go	U2 U3	19 29 39 49 59 09	19 29 39 49 59 09	20 35 50 05
Kus	U3 M Mo-Fr	21 31 41 51 01 11	21 31 41 51 01 11	22 37 52 07
Nu	U2 U3 U4 M Mo-Fr HVZ	22 32 42 52 02 12	23 33 43 53 03 13	23 38 53 08
Wt	U2 U3 M Mo-Fr	24 34 44 54 04 14	25 35 45 55 05 15	25 40 55 10
Kfo	U9 M Mo-Fr HVZ	26 36 46 56 06 16	27 37 47 57 07 17	27 42 57 12
U	M Mo-Fr HVZ	27 37 47 57 07 17	28 38 48 58 08 18	28 43 58 13

U1 → Warschauer Straße (tagsüber)		(früh/abends)	(nachts)
U	M Mo-Fr HVZ	00 10 20 30 40 50	00 10 20 30 40 50	02 17 32 47
Kfo	U9 U M Mo-Fr HVZ	01 11 21 31 41 51	01 11 21 31 41 51	03 18 33 48
Wt	U2 U3 M Mo-Fr	02 12 22 32 42 52	02 12 22 32 42 52	04 19 34 49
Nm	U2 U3 U4 M Mo-Fr HVZ	04 14 24 34 44 54	04 14 24 34 44 54	06 21 36 51
Kus	U3 M Mo-Fr	06 16 26 36 46 56	06 16 26 36 46 56	08 23 38 53
Go	U2 U3	08 18 28 38 48 58	08 18 28 38 48 58	10 25 40 55
Mo	U3 U7	09 19 29 39 49 59	09 19 29 39 49 59	11 26 41 56
Ho	U3 U6 M Mo-Fr HVZ	11 21 31 41 51 01	11 21 31 41 51 01	13 28 43 58
Pr	U3 Mo-Fr	13 23 33 43 53 03	13 23 33 43 53 03	15 30 45 00
Kbo	U3 U8 Mo-Fr	15 25 35 45 55 05	15 25 35 45 55 05	19 34 49 04
Gr	U3 M	16 26 36 46 56 06	16 26 36 46 56 06	20 35 50 05
S	U3 Mo-Fr HVZ	18 28 38 48 58 08	18 28 38 48 58 08	22 37 52 07
WA	S U3 M Mo-Fr HVZ	20 30 40 50 00 10	20 30 40 50 00 10	24 39 54 09

U3 → Krumme Lanke (Mo-Fr tagsüber)		(Sa-So)	(früh/abends)	(nachts)
WA	S U1 M Mo-Fr HVZ	03 09 13 19 23 29 33 39 43 49 53 59	01 11 21 31 41 51		
S	U1 Mo-Fr HVZ	05 11 15 21 25 31 35 41 45 51 55 01	03 13 23 33 43 53		
Gr	U1 M	07 13 17 23 27 33 37 43 47 53 57 03	05 15 25 35 45 55		
Kbo	U1 U8 Mo-Fr	09 15 19 25 29 35 39 45 49 55 59 05	07 17 27 37 47 57		
Pr	U1 Mo-Fr	11 17 21 27 31 37 41 47 51 57 01 07	09 19 29 39 49 59		
Ho	U1 U6 M Mo-Fr HVZ	13 19 23 29 33 39 43 49 53 59 03 09	11 21 31 41 51 01		
Mo	U1 U7	14 20 24 30 34 40 44 50 54 00 04 10	12 22 32 42 52 02		
Go	U1 U2	16 22 26 32 36 42 46 52 56 02 06 12	14 24 34 44 54 04		
Kus	U1 M Mo-Fr	18 24 28 34 38 44 48 54 58 04 08 14	16 26 36 46 56 06		
Nu	U1 U2 U4 M Mo-Fr HVZ	19 25 29 35 39 45 49 55 59 05 09 15	17 27 37 47 57 07	08 18 28 38 48 58	12 27 42 57
Wt	U1 U2 M Mo-Fr	21 27 31 37 41 47 51 57 01 07 11 17	19 29 39 49 59 09	10 20 30 40 50 00	14 29 44 59
Au		23 29 33 39 43 49 53 59 03 09 13 19	21 31 41 51 01 11	12 22 32 42 52 02	16 31 46 01
Sno	U9 Mo-Fr	24 30 34 40 44 50 54 00 04 10 14 20	22 32 42 52 02 12	13 23 33 43 53 03	17 32 47 02
Hz	Mo-Fr	26 32 36 42 46 52 56 02 06 12 16 22	24 34 44 54 04 14	15 25 35 45 55 05	19 34 49 04
Fpo	U7 Mo-Fr HVZ	28 34 38 44 48 54 58 04 08 14 18 24	26 36 46 56 06 16	17 27 37 47 57 07	20 35 50 05
Hb	S Mo-Fr	30 36 40 46 50 56 00 06 10 16 20 26	28 38 48 58 08 18	19 29 39 49 59 09	22 37 52 07
Rd	Mo-Fr	31 37 41 47 51 57 01 07 11 17 21 27	29 39 49 59 09 19	20 30 40 50 00 10	24 39 54 09
Bt	Mo-Fr	33 39 43 49 53 59 03 09 13 19 23 29	31 41 51 01 11 21	22 32 42 52 02 12	25 40 55 10
Po		34 40 44 50 54 00 04 10 14 20 24 30	32 42 52 02 12 22	23 33 43 53 03 13	27 42 57 12
Dd	M Fr	36 42 46 52 56 02 06 12 16 22 26 32	34 44 54 04 14 24	25 35 45 55 05 15	28 43 58 13
T	Mo-Fr	38 44 48 54 58 04 08 14 18 24 28 34	36 46 56 06 16 26	27 37 47 57 07 17	30 45 00 15
Os	Fr Mo-Fr HVZ	39 45 49 55 59 05 09 15 19 25 29 35	37 47 57 07 17 27	28 38 48 58 08 18	32 47 02 17
Ot	Mo-Fr	41 47 51 57 01 07 11 17 21 27 31 37	39 49 59 09 19 29	30 40 50 00 10 20	34 49 04 19
K	Fr Mo-Fr	43 49 53 59 03 09 13 19 23 29 33 39	41 51 01 11 21 31	32 42 52 02 12 22	36 51 06 21

U3 → Warschauer Str. (Mo-Fr tagsüber)		(Sa-So)	(früh/abends)	(nachts)
K	Fr Mo-Fr	03 07 13 17 23 27 33 37 43 47 53 57	05 15 25 35 45 55	06 16 26 36 46 56	10 25 40 55
Ot	Mo-Fr	05 09 15 19 25 29 35 39 45 49 55 59	07 17 27 37 47 57	08 18 28 38 48 58	12 27 42 57
Os	Fr Mo-Fr HVZ	07 11 17 21 27 31 37 41 47 51 57 01	09 19 29 39 49 59	10 20 30 40 50 00	14 29 44 59
T	Mo-Fr	09 13 19 23 29 33 39 43 49 53 59 03	11 21 31 41 51 01	12 22 32 42 52 02	15 30 45 00
Dd	M Fr	11 15 21 25 31 35 41 45 51 55 01 05	13 23 33 43 53 03	14 24 34 44 54 04	17 32 47 02
Po		12 16 22 26 32 36 42 46 52 56 02 06	14 24 34 44 54 04	15 25 35 45 55 05	19 34 49 04
Bt	Mo-Fr	14 18 24 28 34 38 44 48 54 58 04 08	16 26 36 46 56 06	17 27 37 47 57 07	20 35 50 05
Rd	Mo-Fr	15 19 25 29 35 39 45 49 55 59 05 09	17 27 37 47 57 07	18 28 38 48 58 08	22 37 52 07
Hb	S Mo-Fr	17 21 27 31 37 41 47 51 57 01 07 11	19 29 39 49 59 09	20 30 40 50 00 10	23 38 53 08
Fpo	U7 Mo-Fr HVZ	19 23 29 33 39 43 49 53 59 03 09 13	21 31 41 51 01 11	22 32 42 52 02 12	25 40 55 10
Hz	Mo-Fr	20 24 30 34 40 44 50 54 00 04 10 14	22 32 42 52 02 12	23 33 43 53 03 13	27 42 57 12
Sno	U9 Mo-Fr	22 26 32 36 42 46 52 56 02 06 12 16	24 34 44 54 04 14	25 35 45 55 05 15	29 44 59 14
Au		23 27 33 37 43 47 53 57 03 07 13 17	25 35 45 55 05 15	26 36 46 56 06 16	30 45 00 15
Wt	U1 U2 M Mo-Fr	25 29 35 39 45 49 55 59 05 09 15 19	27 37 47 57 07 17	28 38 48 58 08 18	32 47 02 17
Nm	U1 U2 U4 M Mo-Fr HVZ	27 31 37 41 47 51 57 01 07 11 17 21	29 39 49 59 09 19	30 40 50 00 10 20	34 49 04 19
Kus	U1 M Mo-Fr	29 33 39 43 49 53 59 03 09 13 19 23	31 41 51 01 11 21		
Go	U1 U2	31 35 41 45 51 55 01 05 11 15 21 25	33 43 53 03 13 23		
Mo	U1 U7	32 36 42 46 52 56 02 06 12 16 22 26	34 44 54 04 14 24		
Ho	U1 U6 M Mo-Fr HVZ	34 38 44 48 54 58 04 08 14 18 24 28	36 46 56 06 16 26		
Pr	U1 Mo-Fr	36 40 46 50 56 00 06 10 16 20 26 30	38 48 58 08 18 28		
Kbo	U1 U8 Mo-Fr	38 42 48 52 58 02 08 12 18 22 28 32	40 50 00 10 20 30		
Gr	U1 M	39 43 49 53 59 03 09 13 19 23 29 33	41 51 01 11 21 31		
S	U1 Mo-Fr HVZ	41 45 51 55 01 05 11 15 21 25 31 35	43 53 03 13 23 33		
WA	S U1 M Mo-Fr HVZ	43 47 53 57 03 07 13 17 23 27 33 37	45 55 05 15 25 35		

U2 → Ruhleben (Mo-Fr HVZ)			(Mo-Fr NVZ,Sa-So,Ferien)	(früh/abends)	(nachts)
PA	S M Mo-Fr HVZ	03 07 11 15 19 23 27 31 35 39 43 47 51 55 59	04 09 14 19 24 29 34 39 44 49 54 59	04 14 24 34 44 54	09 24 39 54
VIN	M Mo-Fr HVZ	04 08 12 16 20 24 28 32 36 40 44 48 52 56 00	05 10 15 20 25 30 35 40 45 50 55 00	06 16 26 36 46 56	11 26 41 56
Sh	S M	06 10 14 18 22 26 30 34 38 42 46 50 54 58 02	07 12 17 22 27 32 37 42 47 52 57 02	08 18 28 38 48 58	13 28 43 58
EB	M Mo-Fr	08 12 16 20 24 28 32 36 40 44 48 52 56 00 04	09 14 19 24 29 34 39 44 49 54 59 04	10 20 30 40 50 00	15 30 45 00
Sz		10 14 18 22 26 30 34 38 42 46 50 54 58 02 06	11 16 21 26 31 36 41 46 51 56 01 06	12 22 32 42 52 02	17 32 47 02
Lu	M Mo-Fr	12 16 20 24 28 32 36 40 44 48 52 56 00 04 08	13 18 23 28 33 38 43 48 53 58 03 08	13 23 33 43 53 03	18 33 48 03
A	S U5 U8 M Mo-Fr HVZ	14 18 22 26 30 34 38 42 46 50 54 58 02 06 10	15 20 25 30 35 40 45 50 55 00 05 10	15 25 35 45 55 05	20 35 50 05
Ko		16 20 24 28 32 36 40 44 48 52 56 00 04 08 12	17 22 27 32 37 42 47 52 57 02 07 12	17 27 37 47 57 07	22 37 52 07
Mk	Mo-Fr	17 21 25 29 33 37 41 45 49 53 57 01 05 09 13	18 23 28 33 38 43 48 53 58 03 08 13	19 29 39 49 59 09	24 39 54 09
Sp	Mo-Fr HVZ	19 23 27 31 35 39 43 47 51 55 59 03 07 11 15	20 25 30 35 40 45 50 55 00 05 10 15	20 30 40 50 00 10	25 40 55 10
Hv		21 25 29 33 37 41 45 49 53 57 01 05 09 13 17	22 27 32 37 42 47 52 57 02 07 12 17	22 32 42 52 02 12	27 42 57 12
Mi	U6 Mo-Fr	23 27 31 35 39 43 47 51 55 59 03 07 11 15 19	24 29 34 39 44 49 54 59 04 09 14 19	24 34 44 54 04 14	29 44 59 14
MH	M Mo-Fr	24 28 32 36 40 44 48 52 56 00 04 08 12 16 20	25 30 35 40 45 50 55 00 05 10 15 20	25 35 45 55 05 15	30 45 00 15
Pd	S M Mo-Fr	25 29 33 37 41 45 49 53 57 01 05 09 13 17 21	26 31 36 41 46 51 56 01 06 11 16 21	27 37 47 57 07 17	32 47 02 17
MB	M	27 31 35 39 43 47 51 55 59 03 07 11 15 19 23	28 33 38 43 48 53 58 03 08 13 18 23	28 38 48 58 08 18	33 48 03 18
Gu	U1 U3	28 32 36 40 44 48 52 56 00 04 08 12 16 20 24	29 34 39 44 49 54 59 04 09 14 19 24	30 40 50 00 10 20	35 50 05 20
Bs	M Mo-Fr	30 34 38 42 46 50 54 58 02 06 10 14 18 22 26	31 36 41 46 51 56 01 06 11 16 21 26	32 42 52 02 12 22	37 52 07 22
No	U1 U3 U4 M Mo-Fr HVZ	32 36 40 44 48 52 56 00 04 08 12 16 20 24 28	33 38 43 48 53 58 03 08 13 18 23 28	33 43 53 03 13 23	38 53 08 23
Wt	U1 U3 M Mo-Fr	33 37 41 45 49 53 57 01 05 09 13 17 21 25 29	34 39 44 49 54 59 04 09 14 19 24 29	35 45 55 05 15 25	40 55 10 25
Zo	S U9 M Fr Mo-Fr HVZ	36 40 44 48 52 56 00 04 08 12 16 20 24 28 32	37 42 47 52 57 02 07 12 17 22 27 32	38 48 58 08 18 28	43 58 13 28
Zo	S U9 M Fr Mo-Fr HVZ	36 40 44 48 52 56 00 04 08 12 16 20 24 28 32	37 42 47 52 57 02 07 12 17 22 27 32	38 48 58 08 18 28	45 00 15 30
RP	M Fr Mo-Fr	37 41 45 49 53 57 01 05 09 13 17 21 25 29 33	38 43 48 53 58 03 08 13 18 23 28 33	39 49 59 09 19 29	46 01 16 31
Obi		39 43 47 51 55 59 03 07 11 15 19 23 27 31 35	40 45 50 55 00 05 10 15 20 25 30 35	41 51 01 11 21 31	48 03 18 33
Bmo	U7	40 44 48 52 56 00 04 08 12 16 20 24 28 32 36	41 46 51 56 01 06 11 16 21 26 31 36	42 52 02 12 22 32	49 04 19 34
So	Mo-Fr	42 46 50 54 58 02 06 10 14 18 22 26 30 34 38	43 48 53 58 03 08 13 18 23 28 33 38	44 54 04 14 24 34	51 06 21 36
Kd	S Mo-Fr	43 47 51 55 59 03 07 11 15 19 23 27 31 35 39	44 49 54 59 04 09 14 19 24 29 34 39	45 55 05 15 25 35	52 07 22 37
Th	M Fr Mo-Fr HVZ	45 49 53 57 01 05 09 13 17 21 25 29 33 37 41	46 51 56 01 06 11 16 21 26 31 36 41	47 57 07 17 27 37	54 09 24 39
Nd/u	Mo-Fr	51 59 03 11 19 27 35 43	53 03 13 23 33 43	49 59 09 19 29 39	56 11 26 41
Nd/g	Mo-Fr	47 55 07 15 23 31 39	53 03 13 23 33 43	49 59 09 19 29 39	56 11 26 41
Sd/u		52 04 12 20 28 36 44	54 04 14 24 34 44	50 00 10 20 30 40	57 12 27 42
Sd/g		48 56 00 08 16 24 32 40	54 04 14 24 34 44	50 00 10 20 30 40	57 12 27 42
Rl/u	M Mo-Fr	54 06 14 22 30 38 46	56 06 16 26 36 46	52 02 12 22 32 42	59 14 29 44
Rl/g	M Mo-Fr	50 58 02 10 18 26 34 42	56 06 16 26 36 46	52 02 12 22 32 42	59 14 29 44

U2 → Pankow (Mo-Fr HVZ)			(Mo-Fr NVZ,Sa-So,Ferien)	(früh/abends)	(nachts)
Rl/u	M Mo-Fr	03 11 19 27 35 43 51 59	03 13 23 33 43 53	03 13 23 33 43 53	13 28 43 58
Rl/g	M Mo-Fr	07 15 23 31 39 47 55	03 13 23 33 43 53	03 13 23 33 43 53	13 28 43 58
Sd/u		05 13 21 29 37 45 53	05 15 25 35 45 55	05 15 25 35 45 55	15 30 45 00
Sd/g		09 17 25 33 41 49 57 01	05 15 25 35 45 55	05 15 25 35 45 55	15 30 45 00
Nd/u	Mo-Fr	07 15 23 31 39 47 55	07 17 27 37 47 57	06 16 26 36 46 56	16 31 46 01
Nd/g	Mo-Fr	11 19 27 35 43 51 59 03	07 17 27 37 47 57	06 16 26 36 46 56	16 31 46 01
Th	M Fr Mo-Fr HVZ	09 13 17 21 25 29 33 37 41 45 49 53 57 01 05	04 09 14 19 24 29 34 39 44 49 54 59	08 18 28 38 48 58	18 33 48 03
Kd	S Mo-Fr	10 14 18 22 26 30 34 38 42 46 50 54 58 02 06	05 10 15 20 25 30 35 40 45 50 55 00	10 20 30 40 50 00	20 35 50 05
So	Mo-Fr	12 16 20 24 28 32 36 40 44 48 52 56 00 04 08	07 12 17 22 27 32 37 42 47 52 57 02	11 21 31 41 51 01	21 36 51 06
Bmo	U7	13 17 21 25 29 33 37 41 45 49 53 57 01 05 09	08 13 18 23 28 33 38 43 48 53 58 03	13 23 33 43 53 03	23 38 53 08
Obi		14 18 22 26 30 34 38 42 46 50 54 58 02 06 10	09 14 19 24 29 34 39 44 49 54 59 04	14 24 34 44 54 04	24 39 54 09
RP	M Fr Mo-Fr	16 20 24 28 32 36 40 44 48 52 56 00 04 08 12	11 16 21 26 31 36 41 46 51 56 01 06	16 26 36 46 56 06	26 41 56 11
Zo	S U9 M Fr Mo-Fr HVZ	18 22 26 30 34 38 42 46 50 54 58 02 06 10 14	13 18 23 28 33 38 43 48 53 58 03 08	18 28 38 48 58 08	28 43 58 13
Zo	S U9 M Fr Mo-Fr HVZ	18 22 26 30 34 38 42 46 50 54 58 02 06 10 14	13 18 23 28 33 38 43 48 53 58 03 08	18 28 38 48 58 08	30 45 00 15
Wt	U1 U3 M Mo-Fr	20 24 28 32 36 40 44 48 52 56 00 04 08 12 16	15 20 25 30 35 40 45 50 55 00 05 10	21 31 41 51 01 11	32 47 02 17
No	U1 U3 U4 M Mo-Fr HVZ	22 26 30 34 38 42 46 50 54 58 02 06 10 14 18	17 22 27 32 37 42 47 52 57 02 07 12	22 32 42 52 02 12	33 48 03 18
Bs	M Mo-Fr	23 27 31 35 39 43 47 51 55 59 03 07 11 15 19	18 23 28 33 38 43 48 53 58 03 08 13	24 34 44 54 04 14	35 50 05 20
Gu	U1 U3	25 29 33 37 41 45 49 53 57 01 05 09 13 17 21	20 25 30 35 40 45 50 55 00 05 10 15	26 36 46 56 06 16	37 52 07 22
MB	M	27 31 35 39 43 47 51 55 59 03 07 11 15 19 23	22 27 32 37 42 47 52 57 02 07 12 17	27 37 47 57 07 17	38 53 08 23
Pd	S M Mo-Fr	28 32 36 40 44 48 52 56 00 04 08 12 16 20 24	23 28 33 38 43 48 53 58 03 08 13 18	29 39 49 59 09 19	40 55 10 25
MH	M Mo-Fr	30 34 38 42 46 50 54 58 02 06 10 14 18 22 26	25 30 35 40 45 50 55 00 05 10 15 20	30 40 50 00 10 20	41 56 11 26
Mi	U6 Mo-Fr	31 35 39 43 47 51 55 59 03 07 11 15 19 23 27	26 31 36 41 46 51 56 01 06 11 16 21	31 41 51 01 11 21	42 57 12 27
Hv		32 36 40 44 48 52 56 00 04 08 12 16 20 24 28	27 32 37 42 47 52 57 02 07 12 17 22	33 43 53 03 13 23	44 59 14 29
Sp	Mo-Fr HVZ	34 38 42 46 50 54 58 02 06 10 14 18 22 26 30	29 34 39 44 49 54 59 04 09 14 19 24	34 44 54 04 14 24	45 00 15 30
Mk	Mo-Fr	35 39 43 47 51 55 59 03 07 11 15 19 23 27 31	30 35 40 45 50 55 00 05 10 15 20 25	35 45 55 05 15 25	46 01 16 31
Ko		36 40 44 48 52 56 00 04 08 12 16 20 24 28 32	31 36 41 46 51 56 01 06 11 16 21 26	37 47 57 07 17 27	48 03 18 33
A	S U5 U8 M Mo-Fr HVZ	38 42 46 50 54 58 02 06 10 14 18 22 26 30 34	33 38 43 48 53 58 03 08 13 18 23 28	39 49 59 09 19 29	50 05 20 35
Lu	M Mo-Fr	40 44 48 52 56 00 04 08 12 16 20 24 28 32 36	35 40 45 50 55 00 05 10 15 20 25 30	41 51 01 11 21 31	52 07 22 37
Sz		42 46 50 54 58 02 06 10 14 18 22 26 30 34 38	37 42 47 52 57 02 07 12 17 22 27 32	42 52 02 12 22 32	53 08 23 38
EB	M Mo-Fr	44 48 52 56 00 04 08 12 16 20 24 28 32 36 40	39 44 49 54 59 04 09 14 19 24 29 34	44 54 04 14 24 34	55 10 25 40
Sh	S M	46 50 54 58 02 06 10 14 18 22 26 30 34 38 42	41 46 51 56 01 06 11 16 21 26 31 36	46 56 06 16 26 36	57 12 27 42
VIN	M Mo-Fr HVZ	48 52 56 00 04 08 12 16 20 24 28 32 36 40 44	43 48 53 58 03 08 13 18 23 28 33 38	49 59 09 19 29 39	00 15 30 45
PA	S M Mo-Fr HVZ	50 54 58 02 06 10 14 18 22 26 30 34 38 42 46	45 50 55 00 05 10 15 20 25 30 35 40	50 00 10 20 30 40	01 16 31 46

U5 → Alexanderplatz (Mo-Fr HVZ)		(Mo-Fr NVZ)						(früh/abends)		(nachts)
Hö	BUS	00 – alle 4-5 min	05	15	25	35	45	55	05 15 25 35 45 55	05 20 35 50
LL	BUS	02 – alle 4-5 min	07	17	27	37	47	57	07 17 27 37 47 57	07 22 37 52
Hd	M Tram F BUS	04 – alle 4-5 min	09	19	29	39	49	59	09 19 29 39 49 59	09 24 39 54
C	BUS	05 – alle 4-5 min	10	20	30	40	50	00	10 20 30 40 50 00	10 25 40 55
GK	BUS	07 – alle 4-5 min	12	22	32	42	52	02	12 22 32 42 52 02	12 27 42 57
KL	BUS NBUS	08 – alle 4-5 min	08 13 18 23 28 33 38 43 48 53 58 03						13 23 33 43 53 03	13 28 43 58
Wh	S BUS NBUS	11 – alle 4-5 min	11 16 21 26 31 36 41 46 51 56 01 06						16 26 36 46 56 06	16 31 46 01
E	F BUS NBUS	13 – alle 4-5 min	13 18 23 28 33 38 43 48 53 58 03 08						18 28 38 48 58 08	18 33 48 03
Bü	BUS	15 – alle 4-5 min	15 20 25 30 35 40 45 50 55 00 05 10						20 30 40 50 00 10	20 35 50 05
Tk	M Tram NBUS NBUS	17 – alle 4-5 min	17 22 27 32 37 42 47 52 57 02 07 12						22 32 42 52 02 12	23 38 53 08
Fi	BUS NBUS	19 – alle 4-5 min	19 24 29 34 39 44 49 54 59 04 09 14						24 34 44 54 04 14	25 40 55 10
Li	F S Tram NBUS NBUS	21 – alle 4-5 min	22 27 32 37 42 47 52 57 02 07 12 17						27 37 47 57 07 17	27 42 57 12
Md	BUS NBUS	23 – alle 4-5 min	23 28 33 38 43 48 53 58 03 08 13 18						28 38 48 58 08 18	28 43 58 13
Ff	S M Tram	24 – alle 4-5 min	25 30 35 40 45 50 55 00 05 10 15 20						30 40 50 00 10 20	30 45 00 15
Sa		26 – alle 4-5 min	27 32 37 42 47 52 57 02 07 12 17 22						32 42 52 02 12 22	31 46 01 16
Ft	M Tram	27 – alle 4-5 min	28 33 38 43 48 53 58 03 08 13 18 23						33 43 53 03 13 23	33 48 03 18
WR	BUS	28 – alle 4-5 min	29 34 39 44 49 54 59 04 09 14 19 24						34 44 54 04 14 24	34 49 04 19
Sr	BUS	30 – alle 4-5 min	31 36 41 46 51 56 01 06 11 16 21 26						36 46 56 06 16 26	35 50 05 20
Si		31 – alle 4-5 min	32 37 42 47 52 57 02 07 12 17 22 27						37 47 57 07 17 27	37 52 07 22
Al	F S U2 U8 M BUS NBUS	33 – alle 4-5 min	34 39 44 49 54 59 04 09 14 19 24 29						39 49 59 09 19 29	38 53 08 23

U5 → Hönow (Mo-Fr HVZ)		(Mo-Fr NVZ)								(früh/abends)	(nachts)
Al	F S U2 U8 M BUS NBUS	00 – alle 4-5 min	00 05 10 15 20 25 30 35 40 45 50 55							05 15 25 35 45 55	05 20 35 50
Si	BUS	02 – alle 4-5 min	02 07 12 17 22 27 32 37 42 47 52 57							07 17 27 37 47 57	07 22 37 52
Sr	BUS	04 – alle 4-5 min	04 09 14 19 24 29 34 39 44 49 54 59							09 19 29 39 49 59	08 23 38 53
WR	BUS	05 – alle 4-5 min	05 10 15 20 25 30 35 40 45 50 55 00							10 20 30 40 50 00	10 25 40 55
Ft	M Tram	06 – alle 4-5 min	06 11 16 21 26 31 36 41 46 51 56 01							11 21 31 41 51 01	11 26 41 56
Sa		08 – alle 4-5 min	08 13 18 23 28 33 38 43 48 53 58 03							13 23 33 43 53 03	12 27 42 57
Ff	S M Tram	09 – alle 4-5 min	10 15 20 25 30 35 40 45 50 55 00 05							15 25 35 45 55 05	14 29 44 59
Md	BUS NBUS	11 – alle 4-5 min	11 16 21 26 31 36 41 46 51 56 01 06							16 26 36 46 56 06	15 30 45 00
Li	F S Tram NBUS NBUS	12 – alle 4-5 min	13 18 23 28 33 38 43 48 53 58 03 08							18 28 38 48 58 08	17 32 47 02
Fi	BUS NBUS	14 – alle 4-5 min	15 20 25 30 35 40 45 50 55 00 05 10							20 30 40 50 00 10	19 34 49 04
Tk	M Tram NBUS NBUS	16 – alle 4-5 min	17 22 27 32 37 42 47 52 57 02 07 12							22 32 42 52 02 12	21 36 51 06
Bü	BUS	19 – alle 4-5 min	20 25 30 35 40 45 50 55 00 05 10 15							25 35 45 55 05 15	23 38 53 08
E	F BUS NBUS	21 – alle 4-5 min	22 27 32 37 42 47 52 57 02 07 12 17							27 37 47 57 07 17	25 40 55 10
Wh	S BUS NBUS	23 – alle 4-5 min	24 29 34 39 44 49 54 59 04 09 14 19							29 39 49 59 09 19	28 43 58 13
KL	BUS NBUS	25 – alle 4-5 min	26 31 36 41 46 51 56 01 06 11 16 21							31 41 51 01 11 21	30 45 00 15
GK	BUS	27 – alle 4-5 min	33	43	53	03	13	23		33 43 53 03 13 23	32 47 02 17
C	BUS	28 – alle 4-5 min	34	44	54	04	14	24		34 44 54 04 14 24	33 48 03 18
Hd	M Tram F BUS	30 – alle 4-5 min	36	46	56	06	16	26		36 46 56 06 16 26	35 50 05 20
LL	BUS	31 – alle 4-5 min	37	47	57	07	17	27		37 47 57 07 17 27	36 51 06 21
Hö	BUS	33 – alle 4-5 min	39	49	59	09	19	29		39 49 59 09 19 29	38 53 08 23

U4 → Innsbrucker Pl. (Mo-Sa HVZ)				(NVZ)
Nm	U1 U2 U3 M BUS NBUS	00 05 10 15 20 25 30 35 40 45 50 55		06 16 26 36 46 56
V		02 07 12 17 22 27 32 37 42 47 52 57		08 18 28 38 48 58
Bpo	U7	03 08 13 18 23 28 33 38 43 48 53 58		09 19 29 39 49 59
RS	M BUS NBUS	05 10 15 20 25 30 35 40 45 50 55 00		11 21 31 41 51 01
Ip	S M BUS	06 11 16 21 26 31 36 41 46 51 56 01		12 22 32 42 52 02

U4 → Nollendorfplatz (Mo-Sa HVZ)				(NVZ)
Ip	S M BUS	01 06 11 16 21 26 31 36 41 46 51 56		06 16 26 36 46 56
RS	M BUS NBUS	02 07 12 17 22 27 32 37 42 47 52 57		07 17 27 37 47 57
Bpo	U7	03 08 13 18 23 28 33 38 43 48 53 58		08 18 28 38 48 58
V		05 10 15 20 25 30 35 40 45 50 55 00		10 20 30 40 50 00
Nm	U1 U2 U3 M BUS NBUS	07 12 17 22 27 32 37 42 47 52 57 02		12 22 32 42 52 02

U55 → Hauptbahnhof (täglich)			
BRT	S BUS	00 10 20 30 40 50	
BUN		01 11 21 31 41 51	
HBF	DB F S M M F BUS NBUS	02 12 22 32 42 52	

U55 → Brandenburger Tor (täglich)		
HBF	DB F S M M F BUS NBUS	05 15 25 35 45 55
BUN		06 16 26 36 46 56
BRT	S BUS	07 17 27 37 47 57

U6 → Mariendorf (tagsüber)			(früh/abends)	(nachts)
Tg	BUS NBUS	02 07 12 17 22 27 32 37 42 47 52 57	03 13 23 33 43 53	05 20 35 50
Bk	BUS	03 08 13 18 23 28 33 38 43 48 53 58	05 15 25 35 45 55	07 22 37 52
Hh	F BUS NBUS	05 10 15 20 25 30 35 40 45 50 55 00	06 16 26 36 46 56	08 23 38 53
OTI		06 11 16 21 26 31 36 41 46 51 56 01	07 17 27 37 47 57	09 24 39 54
Scha	BUS	07 12 17 22 27 32 37 42 47 52 57 02	09 19 29 39 49 59	11 26 41 56
Sch	M F BUS	09 14 19 24 29 34 39 44 49 54 59 04	10 20 30 40 50 00	12 27 42 57
Afr	BUS	10 15 20 25 30 35 40 45 50 55 00 05	12 22 32 42 52 02	14 29 44 59
Rb		11 16 21 26 31 36 41 46 51 56 01 06	13 23 33 43 53 03	15 30 45 00
Se	M Tram NBUS NBUS	13 18 23 28 33 38 43 48 53 58 03 08	15 25 35 45 55 05	17 32 47 02
Lpo	U9 NBUS NBUS	15 20 25 30 35 40 45 50 55 00 05 10	16 26 36 46 56 06	20 35 50 05
We	S M BUS NBUS	16 21 26 31 36 41 46 51 56 01 06 11	17 27 37 47 57 07	21 36 51 06
Ri	M BUS NBUS	17 22 27 32 37 42 47 52 57 02 07 12	18 28 38 48 58 08	22 37 52 07
Sk		18 23 28 33 38 43 48 53 58 03 08 13	20 30 40 50 00 10	23 38 53 08
NA	M Tram NBUS	19 24 29 34 39 44 49 54 59 04 09 14	21 31 41 51 01 11	24 39 54 09
Ob	M Tram	21 26 31 36 41 46 51 56 01 06 11 16	22 32 42 52 02 12	26 41 56 11
F	F S M Tram BUS	22 27 32 37 42 47 52 57 02 07 12 17	24 34 44 54 04 14	27 42 57 12
Fr	BUS	23 28 33 38 43 48 53 58 03 08 13 18	25 35 45 55 05 15	28 43 58 13
Mic	U2 M BUS	25 30 35 40 45 50 55 00 05 10 15 20	26 36 46 56 06 16	30 45 00 15
Ks	M	26 31 36 41 46 51 56 01 06 11 16 21	27 37 47 57 07 17	31 46 01 16
Hu	U1 U3 M BUS NBUS	27 32 37 42 47 52 57 02 07 12 17 22	29 39 49 59 09 19	32 47 02 17
Me	U7 M BUS NBUS	29 34 39 44 49 54 59 04 09 14 19 24	31 41 51 01 11 21	34 49 04 19
PL	BUS NBUS	31 36 41 46 51 56 01 06 11 16 21 26	33 43 53 03 13 23	36 51 06 21
Ps		32 37 42 47 52 57 02 07 12 17 22 27	34 44 54 04 14 24	37 52 07 22
Ts	S BUS NBUS	34 39 44 49 54 59 04 09 14 19 24 29	36 46 56 06 16 26	39 54 09 24
At	M BUS NBUS	35 40 45 50 55 00 05 10 15 20 25 30	37 47 57 07 17 27	40 55 10 25
Ka	BUS	36 41 46 51 56 01 06 11 16 21 26 31	38 48 58 08 18 28	41 56 11 26
Ull	BUS	37 42 47 52 57 02 07 12 17 22 27 32	39 49 59 09 19 29	42 57 12 27
Wl	BUS	39 44 49 54 59 04 09 14 19 24 29 34	41 51 01 11 21 31	44 59 14 29
Mf	M F BUS NBUS	40 45 50 55 00 05 10 15 20 25 30 35	42 52 02 12 22 32	45 00 15 30

U6 → Tegel (tagsüber)			(früh/abends)	(nachts)
Mf	M F BUS NBUS	01 06 11 16 21 26 31 36 41 46 51 56	06 16 26 36 46 56	13 28 43 58
Wl	BUS	02 07 12 17 22 27 32 37 42 47 52 57	07 17 27 37 47 57	14 29 44 59
Ull	BUS	03 08 13 18 23 28 33 38 43 48 53 58	09 19 29 39 49 59	15 30 45 00
Ka	BUS	05 10 15 20 25 30 35 40 45 50 55 00	10 20 30 40 50 00	17 32 47 02
At	M BUS NBUS	06 11 16 21 26 31 36 41 46 51 56 01	11 21 31 41 51 01	18 33 48 03
Ts	S BUS NBUS	07 12 17 22 27 32 37 42 47 52 57 02	13 23 33 43 53 03	19 34 49 04
Ps		09 14 19 24 29 34 39 44 49 54 59 04	14 24 34 44 54 04	21 36 51 06
PL	BUS NBUS	10 15 20 25 30 35 40 45 50 55 00 05	16 26 36 46 56 06	22 37 52 07
Me	U7 M BUS NBUS	12 17 22 27 32 37 42 47 52 57 02 07	18 28 38 48 58 08	24 39 54 09
Hu	U1 U3 M BUS NBUS	14 19 24 29 34 39 44 49 54 59 04 09	20 30 40 50 00 10	26 41 56 11
Ks	M	15 20 25 30 35 40 45 50 55 00 05 10	21 31 41 51 01 11	27 42 57 12
Mic	U2 M BUS	17 22 27 32 37 42 47 52 57 02 07 12	23 33 43 53 03 13	29 44 59 14
Fr	BUS	18 23 28 33 38 43 48 53 58 03 08 13	24 34 44 54 04 14	30 45 00 15
F	F S M Tram BUS	19 24 29 34 39 44 49 54 59 04 09 14	25 35 45 55 05 15	31 46 01 16
Ob	M Tram	20 25 30 35 40 45 50 55 00 05 10 15	26 36 46 56 06 16	32 47 02 17
NA	M Tram BUS	22 27 32 37 42 47 52 57 02 07 12 17	28 38 48 58 08 18	34 49 04 19
Sk		23 28 33 38 43 48 53 58 03 08 13 18	29 39 49 59 09 19	35 50 05 20
Ri	M BUS NBUS	24 29 34 39 44 49 54 59 04 09 14 19	30 40 50 00 10 20	36 51 06 21
We	S M BUS NBUS	25 30 35 40 45 50 55 00 05 10 15 20	31 41 51 01 11 21	37 52 07 22
Lpo	U9 BUS NBUS	27 32 37 42 47 52 57 02 07 12 17 22	35 45 55 05 15 25	40 55 10 25
Se	M Tram BUS NBUS	28 33 38 43 48 53 58 03 08 13 18 23	36 46 56 06 16 26	41 56 11 26
Rb		30 35 40 45 50 55 00 05 10 15 20 25	37 47 57 07 17 27	43 58 13 28
Afr	BUS	31 36 41 46 51 56 01 06 11 16 21 26	39 49 59 09 19 29	44 59 14 29
Sch	M F BUS	32 37 42 47 52 57 02 07 12 17 22 27	40 50 00 10 20 30	45 00 15 30
Scha	BUS	33 38 43 48 53 58 03 08 13 18 23 28	41 51 01 11 21 31	47 02 17 32
OTI		35 40 45 50 55 00 05 10 15 20 25 30	43 53 03 13 23 33	48 03 18 33
Hh	F BUS NBUS	36 41 46 51 56 01 06 11 16 21 26 31	44 54 04 14 24 34	49 04 19 34
Bk	BUS	37 42 47 52 57 02 07 12 17 22 27 32	45 55 05 15 25 35	51 06 21 36
Tg	BUS NBUS	39 44 49 54 59 04 09 14 19 24 29 34	47 57 07 17 27 37	52 07 22 37

U8 → Hermannstr. (Mo-Fr HVZ)			(Mo-Fr NVZ)				(früh/abends)	(nachts)
WIU	S M F BUS NBUS	01 06 11 16 21 26 31 36 41 46 51 56	06	16	26	36	46	56
RR	F BUS	03 08 13 18 23 28 33 38 43 48 53 58	08	18	28	38	48	58
KB	S M F	05 10 15 20 25 30 35 40 45 50 55 00	10	20	30	40	50	00
LD	BUS	06 11 16 21 26 31 36 41 46 51 56 01	11	21	31	41	51	01
PB	BUS NBUS	07 12 17 22 27 32 37 42 47 52 57 02	07 12 17 22 27 32 37 42 47 52 57 02					
RE	BUS	09 14 19 24 29 34 39 44 49 54 59 04	09 14 19 24 29 34 39 44 49 54 59 04					
FN	BUS	10 15 20 25 30 35 40 45 50 55 00 05	10 15 20 25 30 35 40 45 50 55 00 05					
Olu	U9 M Tram BUS NBUS	12 17 22 27 32 37 42 47 52 57 02 07	12 17 22 27 32 37 42 47 52 57 02 07					
Pk	M	14 19 24 29 34 39 44 49 54 59 04 09	14 19 24 29 34 39 44 49 54 59 04 09					
Gb	DB F S BUS	15 20 25 30 35 40 45 50 55 00 05 10	15 20 25 30 35 40 45 50 55 00 05 10					
Vo	BUS	17 22 27 32 37 42 47 52 57 02 07 12	17 22 27 32 37 42 47 52 57 02 07 12					
B	M BUS	18 23 28 33 38 43 48 53 58 03 08 13	18 23 28 33 38 43 48 53 58 03 08 13					
Ro	M BUS	20 25 30 35 40 45 50 55 00 05 10 15	20 25 30 35 40 45 50 55 00 05 10 15					
W	BUS	21 26 31 36 41 46 51 56 01 06 11 16	21 26 31 36 41 46 51 56 01 06 11 16					
Ap	F S U2 U5 M BUS NBUS	23 28 33 38 43 48 53 58 03 08 13 18	23 28 33 38 43 48 53 58 03 08 13 18					
Jn	S BUS NBUS	25 30 35 40 45 50 55 00 05 10 15 20	25 30 35 40 45 50 55 00 05 10 15 20					
He	BUS NBUS	26 31 36 41 46 51 56 01 06 11 16 21	26 31 36 41 46 51 56 01 06 11 16 21					
Mr	M	28 33 38 43 48 53 58 03 08 13 18 23	28 33 38 43 48 53 58 03 08 13 18 23					
Kbu	U1 U3 BUS	30 35 40 45 50 55 00 05 10 15 20 25	30 35 40 45 50 55 00 05 10 15 20 25					
ST		31 36 41 46 51 56 01 06 11 16 21 26	31 36 41 46 51 56 01 06 11 16 21 26					
Hpo	U7 M BUS NBUS	33 38 43 48 53 58 03 08 13 18 23 28	33 38 43 48 53 58 03 08 13 18 23 28					
Hpo	U7 M BUS NBUS	33 38 43 48 53 58 03 08 13 18 23 28	33 38 43 48 53 58 03 08 13 18 23 28					
Bo	BUS	35 40 45 50 55 00 05 10 15 20 25 30	35 40 45 50 55 00 05 10 15 20 25 30					
L		36 41 46 51 56 01 06 11 16 21 26 31	36 41 46 51 56 01 06 11 16 21 26 31					
HMS	S M BUS NBUS	37 42 47 52 57 02 07 12 17 22 27 32	37 42 47 52 57 02 07 12 17 22 27 32					

U8 → Wittenau (Mo-Fr HVZ)			(Mo-Fr NVZ)				(früh/abends)	(nachts)
HMS	S M BUS NBUS	02 07 12 17 22 27 32 37 42 47 52 57	02 07 12 17 22 27 32 37 42 47 52 57				02 12 22 32 42 52	03 18 33 48
L		04 09 14 19 24 29 34 39 44 49 54 59	04 09 14 19 24 29 34 39 44 49 54 59				04 14 24 34 44 54	04 19 34 49
Bo	BUS	05 10 15 20 25 30 35 40 45 50 55 00	05 10 15 20 25 30 35 40 45 50 55 00				05 15 25 35 45 55	06 21 36 51
Hpo	U7 M BUS NBUS	07 12 17 22 27 32 37 42 47 52 57 02	07 12 17 22 27 32 37 42 47 52 57 02				07 17 27 37 47 57	07 22 37 52
ST		09 14 19 24 29 34 39 44 49 54 59 04	09 14 19 24 29 34 39 44 49 54 59 04				09 19 29 39 49 59	09 24 39 54
Kbu	U1 U3 BUS	11 16 21 26 31 36 41 46 51 56 01 06	11 16 21 26 31 36 41 46 51 56 01 06				11 21 31 41 51 01	11 26 41 56
Mr	M	13 18 23 28 33 38 43 48 53 58 03 08	13 18 23 28 33 38 43 48 53 58 03 08				13 23 33 43 53 03	13 28 43 58
He	BUS NBUS	14 19 24 29 34 39 44 49 54 59 04 09	14 19 24 29 34 39 44 49 54 59 04 09				14 24 34 44 54 04	15 30 45 00
Jn	S BUS NBUS	15 20 25 30 35 40 45 50 55 00 05 10	15 20 25 30 35 40 45 50 55 00 05 10				15 25 35 45 55 05	16 31 46 01
Ap	F S U2 U5 M BUS NBUS	17 22 27 32 37 42 47 52 57 02 07 12	17 22 27 32 37 42 47 52 57 02 07 12				17 27 37 47 57 07	18 33 48 03
W	BUS	19 24 29 34 39 44 49 54 59 04 09 14	19 24 29 34 39 44 49 54 59 04 09 14				19 29 39 49 59 09	19 34 49 04
Ro	M BUS	20 25 30 35 40 45 50 55 00 05 10 15	20 25 30 35 40 45 50 55 00 05 10 15				20 30 40 50 00 10	21 36 51 06
B	M BUS	22 27 32 37 42 47 52 57 02 07 12 17	22 27 32 37 42 47 52 57 02 07 12 17				22 32 42 52 02 12	22 37 52 07
Vo	BUS	23 28 33 38 43 48 53 58 03 08 13 18	23 28 33 38 43 48 53 58 03 08 13 18				23 33 43 53 03 13	24 39 54 09
Gb	DB F S BUS	25 30 35 40 45 50 55 00 05 10 15 20	25 30 35 40 45 50 55 00 05 10 15 20				25 35 45 55 05 15	25 40 55 10
Pk	M	26 31 36 41 46 51 56 01 06 11 16 21	26 31 36 41 46 51 56 01 06 11 16 21				26 36 46 56 06 16	27 42 57 12
Olu	U9 M Tram BUS NBUS	28 33 38 43 48 53 58 03 08 13 18 23	28 33 38 43 48 53 58 03 08 13 18 23				28 38 48 58 08 18	28 43 58 13
FN	BUS	30 35 40 45 50 55 00 05 10 15 20 25	30 35 40 45 50 55 00 05 10 15 20 25				30 40 50 00 10 20	30 45 00 15
RE	BUS	31 36 41 46 51 56 01 06 11 16 21 26	31 36 41 46 51 56 01 06 11 16 21 26				31 41 51 01 11 21	31 46 01 16
PB	BUS NBUS	32 37 42 47 52 57 02 07 12 17 22 27	32 37 42 47 52 57 02 07 12 17 22 27				32 42 52 02 12 22	33 48 03 18
LD	BUS	34 39 44 49 54 59 04 09 14 19 24 29	34	44	54	04	14	24
KB	S M F	35 40 45 50 55 00 05 10 15 20 25 30	35	45	55	05	15	25
RR	F BUS	37 42 47 52 57 02 07 12 17 22 27 32	37	47	57	07	17	27
WIU	S M F BUS NBUS	38 43 48 53 58 03 08 13 18 23 28 33	38	48	58	08	18	28

HMS								03 18 33 48
L								04 19 34 49
Bo								06 21 36 51
Hpo								07 22 37 52
ST								09 24 39 54
Kbu								11 26 41 56
Mr								13 28 43 58
He								15 30 45 00
Jn								16 31 46 01
Ap								18 33 48 03
W								19 34 49 04
Ro								21 36 51 06
B								22 37 52 07
Vo								24 39 54 09
Gb								25 40 55 10
Pk								27 42 57 12
Olu								28 43 58 13
FN								30 45 00 15
RE								31 46 01 16
PB								33 48 03 18
LD								34 49 04 19
KB								35 50 05 20
RR								37 52 07 22
WIU								39 54 09 24

U9 → Rath.Steglitz		(Mo-Sa HVZ)	(Mo-Sa NVZ,So,Ferien)	(früh/abends)	(nachts)
Olo	U8 M Tram BUS BUS	01 05 09 13 17 21 25 29 33 37 41 45 49 53 57	01 06 11 16 21 26 31 36 41 46 51 56	01 11 21 31 41 51	01 16 31 46
Np	BUS	02 06 10 14 18 22 26 30 34 38 42 46 50 54 58	02 07 12 17 22 27 32 37 42 47 52 57	02 12 22 32 42 52	02 17 32 47
Lpu	U6 BUS BUS	03 07 11 15 19 23 27 31 35 39 43 47 51 55 59	03 08 13 18 23 28 33 38 43 48 53 58	03 13 23 33 43 53	04 19 34 49
Am	BUS	05 09 13 17 21 25 29 33 37 41 45 49 53 57 01	05 10 15 20 25 30 35 40 45 50 55 00	05 15 25 35 45 55	05 20 35 50
WF	S	06 10 14 18 22 26 30 34 38 42 46 50 54 58 02	06 11 16 21 26 31 36 41 46 51 56 01	06 16 26 36 46 56	07 22 37 52
Bi		07 11 15 19 23 27 31 35 39 43 47 51 55 59 03	07 12 17 22 27 32 37 42 47 52 57 02	07 17 27 37 47 57	08 23 38 53
Tm	M X BUS BUS	09 13 17 21 25 29 33 37 41 45 49 53 57 01 05	09 14 19 24 29 34 39 44 49 54 59 04	09 19 29 39 49 59	09 24 39 54
Ha	BUS BUS	10 14 18 22 26 30 34 38 42 46 50 54 58 02 06	10 15 20 25 30 35 40 45 50 55 00 05	10 20 30 40 50 00	11 26 41 56
Zu	Bahn S U2 M X BUS BUS	12 16 20 24 28 32 36 40 44 48 52 56 00 04 08	12 17 22 27 32 37 42 47 52 57 02 07	12 22 32 42 52 02	13 28 43 58
Zu	Bahn S U2 M X BUS BUS	12 16 20 24 28 32 36 40 44 48 52 56 00 04 08	12 17 22 27 32 37 42 47 52 57 02 07	12 22 32 42 52 02	15 30 45 00
Kfu	U1 M X BUS BUS	14 18 22 26 30 34 38 42 46 50 54 58 02 06 10	14 19 24 29 34 39 44 49 54 59 04 09	14 24 34 44 54 04	16 31 46 01
Snu	U3 BUS	15 19 23 27 31 35 39 43 47 51 55 59 03 07 11	15 20 25 30 35 40 45 50 55 00 05 10	15 25 35 45 55 05	17 32 47 02
Gt		16 20 24 28 32 36 40 44 48 52 56 00 04 08 12	16 21 26 31 36 41 46 51 56 01 06 11	16 26 36 46 56 06	18 33 48 03
Beo	U7 BUS BUS	17 21 25 29 33 37 41 45 49 53 57 01 05 09 13	17 22 27 32 37 42 47 52 57 02 07 12	17 27 37 47 57 07	20 35 50 05
Bu	S BUS	19 23 27 31 35 39 43 47 51 55 59 03 07 11 15	19 24 29 34 39 44 49 54 59 04 09 14	19 29 39 49 59 09	21 36 51 06
Fw	BUS	20 24 28 32 36 40 44 48 52 56 00 04 08 12 16	20 25 30 35 40 45 50 55 00 05 10 15	20 30 40 50 00 10	23 38 53 08
Wsg	M X BUS BUS	21 25 29 33 37 41 45 49 53 57 01 05 09 13 17	21 26 31 36 41 46 51 56 01 06 11 16	21 31 41 51 01 11	24 39 54 09
Slu	M BUS	23 27 31 35 39 43 47 51 55 59 03 07 11 15 19	23 28 33 38 43 48 53 58 03 08 13 18	23 33 43 53 03 13	25 40 55 10
Rzu	S M X BUS	24 28 32 36 40 44 48 52 56 00 04 08 12 16 20	24 29 34 39 44 49 54 59 04 09 14 19	24 34 44 54 04 14	26 41 56 11

U9 → Osloer Str.		(Mo-Sa HVZ)	(Mo-Sa NVZ,So,Ferien)	(früh/abends)	(nachts)
Rzu	S M X BUS	03 07 11 15 19 23 27 31 35 39 43 47 51 55 59	01 06 11 16 21 26 31 36 41 46 51 56	01 11 21 31 41 51	01 16 31 46
Slo	M BUS	04 08 12 16 20 24 28 32 36 40 44 48 52 56 00	02 07 12 17 22 27 32 37 42 47 52 57	02 12 22 32 42 52	02 17 32 47
Wsg	M X BUS BUS	05 09 13 17 21 25 29 33 37 41 45 49 53 57 01	03 08 13 18 23 28 33 38 43 48 53 58	03 13 23 33 43 53	04 19 34 49
Fw	BUS	06 10 14 18 22 26 30 34 38 42 46 50 54 58 02	04 09 14 19 24 29 34 39 44 49 54 59	04 14 24 34 44 54	05 20 35 50
Bu	S BUS	08 12 16 20 24 28 32 36 40 44 48 52 56 00 04	06 11 16 21 26 31 36 41 46 51 56 01	06 16 26 36 46 56	06 21 36 51
Beo	U7 BUS BUS	09 13 17 21 25 29 33 37 41 45 49 53 57 01 05	07 12 17 22 27 32 37 42 47 52 57 02	07 17 27 37 47 57	08 23 38 53
Gt		11 15 19 23 27 31 35 39 43 47 51 55 59 03 07	09 14 19 24 29 34 39 44 49 54 59 04	09 19 29 39 49 59	09 24 39 54
Snu	U3 BUS	12 16 20 24 28 32 36 40 44 48 52 56 00 04 08	10 15 20 25 30 35 40 45 50 55 00 05	10 20 30 40 50 00	10 25 40 55
Kfu	U1 M X BUS BUS	13 17 21 25 29 33 37 41 45 49 53 57 01 05 09	11 16 21 26 31 36 41 46 51 56 01 06	11 21 31 41 51 01	11 26 41 56
Zu	Bahn S U2 M X BUS BUS	14 18 22 26 30 34 38 42 46 50 54 58 02 06 10	12 17 22 27 32 37 42 47 52 57 02 07	12 22 32 42 52 02	13 28 43 58
Zu	Bahn S U2 M X BUS BUS	14 18 22 26 30 34 38 42 46 50 54 58 02 06 10	12 17 22 27 32 37 42 47 52 57 02 07	12 22 32 42 52 02	15 30 45 00
Ha	BUS BUS	16 20 24 28 32 36 40 44 48 52 56 00 04 08 12	14 19 24 29 34 39 44 49 54 59 04 09	14 24 34 44 54 04	17 32 47 02
Tm	M X BUS BUS	18 22 26 30 34 38 42 46 50 54 58 02 06 10 14	16 21 26 31 36 41 46 51 56 01 06 11	16 26 36 46 56 06	18 33 48 03
Bi		19 23 27 31 35 39 43 47 51 55 59 03 07 11 15	17 22 27 32 37 42 47 52 57 02 07 12	17 27 37 47 57 07	20 35 50 05
WF	S	20 24 28 32 36 40 44 48 52 56 00 04 08 12 16	18 23 28 33 38 43 48 53 58 03 08 13	18 28 38 48 58 08	21 36 51 06
Am	BUS	22 26 30 34 38 42 46 50 54 58 02 06 10 14 18	20 25 30 35 40 45 50 55 00 05 10 15	20 30 40 50 00 10	22 37 52 07
Lpu	U6 BUS BUS	23 27 31 35 39 43 47 51 55 59 03 07 11 15 19	21 26 31 36 41 46 51 56 01 06 11 16	21 31 41 51 01 11	24 39 54 09
Np	BUS	25 29 33 37 41 45 49 53 57 01 05 09 13 17 21	23 28 33 38 43 48 53 58 03 08 13 18	23 33 43 53 03 13	25 40 55 10
Olo	U8 M Tram BUS BUS	26 30 34 38 42 46 50 54 58 02 06 10 14 18 22	24 29 34 39 44 49 54 59 04 09 14 19	24 34 44 54 04 14	26 41 56 11

U7 → Rudow		(HVZ)	(Sa-So, NVZ, Ferien)	(früh/abends)	(nachts)
RSp	DB Bahn S M X BUS BUS	03 07 11 15 19 23 27 31 35 39 43 47 51 55 59	01 06 11 16 21 26 31 36 41 46 51 56	05 15 25 35 45 55	12 27 42 57
AS	X	04 08 12 16 20 24 28 32 36 40 44 48 52 56 00	02 07 12 17 22 27 32 37 42 47 52 57	06 16 26 36 46 56	13 28 43 58
Zi	X	05 09 13 17 21 25 29 33 37 41 45 49 53 57 01	04 09 14 19 24 29 34 39 44 49 54 59	07 17 27 37 47 57	15 30 45 00
Hs	X BUS BUS	07 11 15 19 23 27 31 35 39 43 47 51 55 59 03	06 11 16 21 26 31 36 41 46 51 56 01	09 19 29 39 49 59	17 32 47 02
P	BUS BUS	09 13 17 21 25 29 33 37 41 45 49 53 57 01 05	07 12 17 22 27 32 37 42 47 52 57 02	11 21 31 41 51 01	18 33 48 03
Rm	BUS BUS	10 14 18 22 26 30 34 38 42 46 50 54 58 02 06	09 14 19 24 29 34 39 44 49 54 59 04	12 22 32 42 52 02	20 35 50 05
Sie	BUS	12 16 20 24 28 32 36 40 44 48 52 56 00 04 08	10 15 20 25 30 35 40 45 50 55 00 05	14 24 34 44 54 04	21 36 51 06
Hl	BUS	13 17 21 25 29 33 37 41 45 49 53 57 01 05 09	12 17 22 27 32 37 42 47 52 57 02 07	15 25 35 45 55 05	23 38 53 08
JK	M X BUS	14 18 22 26 30 34 38 42 46 50 54 58 02 06 10	13 18 23 28 33 38 43 48 53 58 03 08	16 26 36 46 56 06	24 39 54 09
Jho	Bahn S M X BUS	16 20 24 28 32 36 40 44 48 52 56 00 04 08 12	14 19 24 29 34 39 44 49 54 59 04 09	18 28 38 48 58 08	25 40 55 10
Mp	M	17 21 25 29 33 37 41 45 49 53 57 01 05 09 13	16 21 26 31 36 41 46 51 56 01 06 11	19 29 39 49 59 09	27 42 57 12
Rw	M X	19 23 27 31 35 39 43 47 51 55 59 03 07 11 15	17 22 27 32 37 42 47 52 57 02 07 12	21 31 41 51 01 11	28 43 58 13
Bmu	U2	20 24 28 32 36 40 44 48 52 56 00 04 08 12 16	19 24 29 34 39 44 49 54 59 04 09 14	24 34 44 54 04 14	30 45 00 15
Wd	Bahn S M X BUS	21 25 29 33 37 41 45 49 53 57 01 05 09 13 17	20 25 30 35 40 45 50 55 00 05 10 15	25 35 45 55 05 15	31 46 01 16
Ad	M X BUS BUS	23 27 31 35 39 43 47 51 55 59 03 07 11 15 19	21 26 31 36 41 46 51 56 01 06 11 16	26 36 46 56 06 16	32 47 02 17
Kn	BUS	24 28 32 36 40 44 48 52 56 00 04 08 12 16 20	22 27 32 37 42 47 52 57 02 07 12 17	27 37 47 57 07 17	33 48 03 18
Fpu	U3 BUS BUS	25 29 33 37 41 45 49 53 57 01 05 09 13 17 21	24 29 34 39 44 49 54 59 04 09 14 19	29 39 49 59 09 19	35 50 05 20
Bli	BUS BUS	27 31 35 39 43 47 51 55 59 03 07 11 15 19 23	25 30 35 40 45 50 55 00 05 10 15 20	30 40 50 00 10 20	36 51 06 21
Beu	U9 BUS BUS	28 32 36 40 44 48 52 56 00 04 08 12 16 20 24	26 31 36 41 46 51 56 01 06 11 16 21	31 41 51 01 11 21	39 54 09 24
Bpu	U4	29 33 37 41 45 49 53 57 01 05 09 13 17 21 25	28 33 38 43 48 53 58 03 08 13 18 23	33 43 53 03 13 23	41 56 11 26
Ei		30 34 38 42 46 50 54 58 02 06 10 14 18 22 26	29 34 39 44 49 54 59 04 09 14 19 24	34 44 54 04 14 24	42 57 12 27
Kt	M BUS	32 36 40 44 48 52 56 00 04 08 12 16 20 24 28	30 35 40 45 50 55 00 05 10 15 20 25	35 45 55 05 15 15	43 58 13 28
Y	S M	33 37 41 45 49 53 57 01 05 09 13 17 21 25 29	32 37 42 47 52 57 02 07 12 17 22 27	37 47 57 07 17 27	45 00 15 30
Mu	U1 U3	35 39 43 47 51 55 59 03 07 11 15 19 23 27 31	33 38 43 48 53 58 03 08 13 18 23 28	38 48 58 08 18 28	46 01 16 31
Me	U6 M BUS BUS	37 41 45 49 53 57 01 05 09 13 17 21 25 29 33	35 40 45 50 55 00 05 10 15 20 25 30	40 50 00 10 20 30	49 04 19 34
Gs	BUS	38 42 46 50 54 58 02 06 10 14 18 22 26 30 34	37 42 47 52 57 02 07 12 17 22 27 32	42 52 02 12 22 32	50 05 20 35
Sü		40 44 48 52 56 00 04 08 12 16 20 24 28 32 36	38 43 48 53 58 03 08 13 18 23 28 33	43 53 03 13 23 33	52 07 22 37
Hpu	U8 M BUS BUS	42 46 50 54 58 02 06 10 14 18 22 26 30 34 38	40 45 50 55 00 05 10 15 20 25 30 35	45 55 05 15 25 35	55 10 25 40
Rk	BUS BUS	43 47 51 55 59 03 07 11 15 19 23 27 31 35 39	42 47 52 57 02 07 12 17 22 27 32 37	47 57 07 17 27 37	56 11 26 41
KM		45 49 53 57 01 05 09 13 17 21 25 29 33 37 41	43 48 53 58 03 08 13 18 23 28 33 38	48 58 08 18 28 38	58 13 28 43
Nk	S BUS BUS	46 50 54 58 02 06 10 14 18 22 26 30 34 38 42	45 50 55 00 05 10 15 20 25 30 35 40	50 00 10 20 30 40	59 14 29 44
Gz	BUS	48 52 56 00 04 08 12 16 20 24 28 32 36 40 44	46 51 56 01 06 11 16 21 26 31 36 41	51 01 11 21 31 41	01 16 31 46
Bl	BUS	49 53 57 01 05 09 13 17 21 25 29 33 37 41 45	48 53 58 03 08 13 18 23 28 33 38 43	53 03 13 23 33 43	02 17 32 47
Pi	M	51 55 59 03 07 11 15 19 23 27 31 35 39 43 47	49 54 59 04 09 14 19 24 29 34 39 44	54 04 14 24 34 44	04 19 34 49
Br	M BUS	52 56 00 04 08 12 16 20 24 28 32 36 40 44 48	51 56 01 06 11 16 21 26 31 36 41 46	56 06 16 26 36 46	05 20 35 50
Jt	M X BUS	54 58 02 06 10 14 18 22 26 30 34 38 42 46 50	52 57 02 07 12 17 22 27 32 37 42 47	57 07 17 27 37 47	07 22 37 52
La	BUS	55 59 03 07 11 15 19 23 27 31 35 39 43 47 51	54 59 04 09 14 19 24 29 34 39 44 49	59 09 19 29 39 49	08 23 38 53
Wk		57 01 05 09 13 17 21 25 29 33 37 41 45 49 53	55 00 05 10 15 20 25 30 35 40 45 50	00 10 20 30 40 50	10 25 40 55
Zd	BUS	58 02 06 10 14 18 22 26 30 34 38 42 46 50 54	56 01 06 11 16 21 26 31 36 41 46 51	01 11 21 31 41 51	11 26 41 56
R	X BUS	59 03 07 11 15 19 23 27 31 35 39 43 47 51 55	58 03 08 13 18 23 28 33 38 43 48 53	03 13 23 33 43 53	12 27 42 57

U7 → Spandau		(HVZ)	(Sa-So, NVZ, Ferien)	(früh/abends)	(nachts)
R	X BUS	01 05 09 13 17 21 25 29 33 37 41 45 49 53 57	00 05 10 15 20 25 30 35 40 45 50 55	05 15 25 35 45 55	01 16 31 46
Zd	BUS	02 06 10 14 18 22 26 30 34 38 42 46 50 54 58	02 07 12 17 22 27 32 37 42 47 52 57	06 16 26 36 46 56	03 18 33 48
Wk		03 07 11 15 19 23 27 31 35 39 43 47 51 55 59	03 08 13 18 23 28 33 38 43 48 53 58	07 17 27 37 47 57	04 19 34 49
La	BUS	05 09 13 17 21 25 29 33 37 41 45 49 53 57 01	04 09 14 19 24 29 34 39 44 49 54 59	09 19 29 39 49 59	05 20 35 50
Jt	M X BUS	06 10 14 18 22 26 30 34 38 42 46 50 54 58 02	06 11 16 21 26 31 36 41 46 51 56 01	10 20 30 40 50 00	07 22 37 52
Br	M BUS	08 12 16 20 24 28 32 36 40 44 48 52 56 00 04	08 13 18 23 28 33 38 43 48 53 58 03	12 22 32 42 52 02	09 24 39 54
Pi	M	09 13 17 21 25 29 33 37 41 45 49 53 57 01 05	09 14 19 24 29 34 39 44 49 54 59 04	13 23 33 43 53 03	10 25 40 55
Bl	BUS	11 15 19 23 27 31 35 39 43 47 51 55 59 03 07	10 15 20 25 30 35 40 45 50 55 00 05	15 25 35 45 55 05	11 26 41 56
Gz	BUS	13 17 21 25 29 33 37 41 45 49 53 57 01 05 09	12 17 22 27 32 37 42 47 52 57 02 07	17 27 37 47 57 07	13 28 43 58
Nk	S BUS BUS	14 18 22 26 30 34 38 42 46 50 54 58 02 06 10	14 19 24 29 34 39 44 49 54 59 04 09	18 28 38 48 58 08	15 30 45 00
KM		16 20 24 28 32 36 40 44 48 52 56 00 04 08 12	15 20 25 30 35 40 45 50 55 00 05 10	20 30 40 50 00 10	16 31 46 01
Rk	BUS BUS	17 21 25 29 33 37 41 45 49 53 57 01 05 09 13	16 21 26 31 36 41 46 51 56 01 06 11	21 31 41 51 01 11	17 32 47 02
Hpu	U8 M BUS BUS	18 22 26 30 34 38 42 46 50 54 58 02 06 10 14	18 23 28 33 38 43 48 53 58 03 08 13	22 32 42 52 02 12	19 34 49 04
Sü		20 24 28 32 36 40 44 48 52 56 00 04 08 12 16	20 25 30 35 40 45 50 55 00 05 10 15	24 34 44 54 04 14	21 36 51 06
Gs	BUS	22 26 30 34 38 42 46 50 54 58 02 06 10 14 18	21 26 31 36 41 46 51 56 01 06 11 16	26 36 46 56 06 16	22 37 52 07
Me	U6 M BUS BUS	24 28 32 36 40 44 48 52 56 00 04 08 12 16 20	23 28 33 38 43 48 53 58 03 08 13 18	28 38 48 58 08 18	25 40 55 10
Mu	U1 U3	25 29 33 37 41 45 49 53 57 01 05 09 13 17 21	25 30 35 40 45 50 55 00 05 10 15 20	29 39 49 59 09 19	26 41 56 11
Y	S M	27 31 35 39 43 47 51 55 59 03 07 11 15 19 23	26 31 36 41 46 51 56 01 06 11 16 21	31 41 51 01 11 21	28 43 58 13
Kt	M BUS	28 32 36 40 44 48 52 56 00 04 08 12 16 20 24	28 33 38 43 48 53 58 03 08 13 18 23	32 42 52 02 12 22	29 44 59 14
Ei		30 34 38 42 46 50 54 58 02 06 10 14 18 22 26	29 34 39 44 49 54 59 04 09 14 19 24	34 44 54 04 14 24	31 46 01 16
Bpu	U4	31 35 39 43 47 51 55 59 03 07 11 15 19 23 27	30 35 40 45 50 55 00 05 10 15 20 25	35 45 55 05 15 25	32 47 02 17
Beu	U9 BUS BUS	32 36 40 44 48 52 56 00 04 08 12 16 20 24 28	32 37 42 47 52 57 02 07 12 17 22 27	38 48 58 08 18 28	33 48 03 18
Bli	BUS BUS	33 37 41 45 49 53 57 01 05 09 13 17 21 25 29	33 38 43 48 53 58 03 08 13 18 23 28	39 49 59 09 19 29	34 49 04 19
Fpu	U3 BUS BUS	35 39 43 47 51 55 59 03 07 11 15 19 23 27 31	34 39 44 49 54 59 04 09 14 19 24 29	41 51 01 11 21 31	36 51 06 21
Kn	BUS	36 40 44 48 52 56 00 04 08 12 16 20 24 28 32	36 41 46 51 56 01 06 11 16 21 26 31	42 52 02 12 22 32	37 52 07 22
Ad	M X BUS BUS	37 41 45 49 53 57 01 05 09 13 17 21 25 29 33	37 42 47 52 57 02 07 12 17 22 27 32	43 53 03 13 23 33	38 53 08 23
Wd	Bahn S M X BUS	39 43 47 51 55 59 03 07 11 15 19 23 27 31 35	38 43 48 53 58 03 08 13 18 23 28 33	45 55 05 15 25 35	40 55 10 25
Bmu	U2	40 44 48 52 56 00 04 08 12 16 20 24 28 32 36	40 45 50 55 00 05 10 15 20 25 30 35	46 56 06 16 26 36	41 56 11 26
Rw	M X	41 45 49 53 57 01 05 09 13 17 21 25 29 33 37	41 46 51 56 01 06 11 16 21 26 31 36	47 57 07 17 27 37	42 57 12 27
Mp	M	43 47 51 55 59 03 07 11 15 19 23 27 31 35 39	43 48 53 58 03 08 13 18 23 28 33 38	49 59 09 19 29 39	44 59 14 29
Jhu	Bahn S M X BUS	44 48 52 56 00 04 08 12 16 20 24 28 32 36 40	44 49 54 59 04 09 14 19 24 29 34 39	50 00 10 20 30 40	45 00 15 30
JK	M X BUS	46 50 54 58 02 06 10 14 18 22 26 30 34 38 42	45 50 55 00 05 10 15 20 25 30 35 40	52 02 12 22 32 42	47 02 17 32
Hl	BUS	47 51 55 59 03 07 11 15 19 23 27 31 35 39 43	47 52 57 02 07 12 17 22 27 32 37 42	53 03 13 23 33 43	48 03 18 33
Sie	BUS	49 53 57 01 05 09 13 17 21 25 29 33 37 41 45	48 53 58 03 08 13 18 23 28 33 38 43	55 05 15 25 35 45	50 05 20 35
Rm	BUS BUS	50 54 58 02 06 10 14 18 22 26 30 34 38 42 46	49 54 59 04 09 14 19 24 29 34 39 44	56 06 16 26 36 46	51 06 21 36
P	BUS BUS	52 56 00 04 08 12 16 20 24 28 32 36 40 44 48	51 56 01 06 11 16 21 26 31 36 41 46	58 08 18 28 38 48	53 08 23 38
Hs	X BUS BUS	53 57 01 05 09 13 17 21 25 29 33 37 41 45 49	53 58 03 08 13 18 23 28 33 38 43 48	59 09 19 29 39 49	54 09 24 39
Zi	X	55 59 03 07 11 15 19 23 27 31 35 39 43 47 51	54 59 04 09 14 19 24 29 34 39 44 49	01 11 21 31 41 51	56 11 26 41
AS	X	56 00 04 08 12 16 20 24 28 32 36 40 44 48 52	56 01 06 11 16 21 26 31 36 41 46 51	02 12 22 32 42 52	57 12 27 42
RSp	DB Bahn S M X BUS BUS	57 01 05 09 13 17 21 25 29 33 37 41 45 49 53	57 02 07 12 17 22 27 32 37 42 47 52	03 13 23 33 43 53	58 13 28 43

N1 → S+U Zoologischer Garten

BWRS/WA	M M10	11 25 41 55
S	N65	14 28 44 58
Gr	M M29	18 32 48 02
Kbo/Kbu	N8	20 34 50 04
Pr		21 35 51 05
Ho/Hu	M M41 N42	26 37 56 07
Mehringbr.	N6	26 40 56 10
Mo/Mu		27 41 57 11
MB	M M29	29 43 59 13
Pdmr. Br.	N2 M M29 M48	30 44 00 14
Kus	N2 M M48	32 46 02 16
Bs	N2 M M19 M48	33 47 03 17
No/Nm/Nu	N2 M M19 N26	34 48 04 18
Wt	N2 N8 M M19 M29 M46 N26	37 51 07 21
Kfo/Kfu	N2 N8 N9 M M19 M29 M46 N10 N26	54 24
BZOS/Zo/Zu	N2 N9 M M45 M46 M49 N10 N26	56 26

N1 → S+U Warschauer Straße

BZOS/Zo/Zu	N2 N9 M M45 M46 M49 N10 N26	00 30
Kfo/Kfu	N2 N8 N9 M M19 M29 M46 N10 N26	02 32
Wt	N2 N8 M M19 M29 M46 N26	05 21 35 51
No/Nm/Nu	N2 M M19 N26	08 24 38 54
Bs	N2 M M19 M48	09 25 39 55
Kus	N2 M M48	10 26 40 56
Pdmr. Br.	N2 M M29 M48	12 28 42 58
MB	M M29	13 29 43 59
Mo/Mu		15 31 45 01
Mehringbr.	N6	16 32 46 02
Ho/Hu	M M41 N42	17 33 47 03
Pr		19 35 49 05
Kbo/Kbu	N8	20 36 50 06
Gr	M M29	22 38 52 08
S	N65	25 41 55 11
BWRS/WA	M M10	28 44 58 14

N3 → S Mexikoplatz

Wt	N1 N2 M M19 M29 M46 N26	14 44
Kfo/Kfu	N1 N2 N9 M M19 M29 M46 N10 N26	17 47
Sno/Snu	N9	20 50
Hz		21 51
Fpo/Fpu	N7 N42	23 53
BHO	N10	25 55
BHEI/Hb		27 57
Wiesbad. Str.		30 00
Bt		32 02
Rohlfsstr.		33 03
Dd	M M11	36 06
T		38 08
Os (Arg.A.)	N10	42 12
Onk.-Tom-Str.		44 14
K		46 16
BMEX		48 18

N3 → U Wittenbergplatz

BMEX		20 50
K		22 52
Onk.-Tom-Str.		24 54
Os (Arg.A.)	N10	26 56
T		28 58
Dd	M M11	30 00
Rohlfsstr.		32 02
Bt		34 04
Wiesbad. Str.		36 06
BHEI/Hb		39 09
BHO	N10	41 11
Fpo/Fpu	N7 N42	47 17
Hz		49 19
Sno/Snu	N9	50 20
Kfo/Kfu	N1 N2 N9 M M19 M29 M46 N10 N26	52 22
Wt	N1 N2 M M19 M29 M46 N26	55 25

N2 → U Ruhleben

BPKW/PA	M M1 M M27 N50	26 56
VIN	M M1	29 59
Bornh.Str.	M M1 M13	31 01
BSAL/Sh	M M1	32 02
EB	M M1 M10	35 05
Sz		38 08
Lu		40 10
BALX (Memh.)	N5 N8 M M2 M4 M5 N40 N42 N65	43 13
BALX (Memh.)	N5 N8 M M2 M4 M5 N40 N42 N65	30 45 00 15
Marienkirche	N5 N8 M M4 M5 N40 N42 N65	31 46 01 16
RHO	N8 N40 N42 N65	32 47 02 17
Sp	N42	35 50 05 20
Jerus. Str.		36 51 06 21
Mi/Mic	N6	37 52 07 22
Wilhelmstr.	M M48	38 53 08 23
BPOP/Pd	M M41 M48	39 54 09 24
BPOP/Pd	M M41 M48	42 57 12 27
Pdmr. Br.	N1 M M29 M48	45 00 15 30
Kus	N1 M M48	47 02 17 32
Bs	N1 M M19 M48	48 03 18 33
No/Nm/Nu	N1 M M19 N26	49 04 19 34
Wt	N1 N8 M M19 M29 M46 N26	52 07 22 37
Kfo/Kfu	N1 N8 N9 M M19 M29 M46 N10 N26	55 10 25 40
BZOS/Zo/Zu	N1 N9 M M45 M46 M49 N10 N26	56 11 26 41
BZOS/Zo/Zu	N1 N9 M M45 M46 M49 N10 N26	15 45
RP	M M45	18 48
Obi		20 50
Bmo/Bmu	N7	24 54
So		26 56
Kd		27 57
Th	M M49 N42	30 00
Nd		32 02
Rl	M M45	36 06

N2 → S+U Pankow

Rl	M M45	21 51
Nd		25 55
Th (Süd)	M M49 N42	27 57
Kd		28 58
So		30 00
Bmo/Bmu	N7	33 03
Obi		35 05
RP	M M45	37 07
BZOS/Zo/Zu	N1 N9 M M45 M46 M49 N10 N26	43 13
BZOS/Zo/Zu	N1 N9 M M45 M46 M49 N10 N26	30 45 00 15
Kfo/Kfu	N1 N8 N9 M M19 M29 M46 N10 N26	32 47 02 17
Wt	N1 N8 M M19 M29 M46 N26	35 50 05 20
No/Nm/Nu	N1 M M19 N26	38 53 08 23
Bs	N1 M M19 M48	39 54 09 24
Kus	N1 M M48	40 55 10 25
Pdmr. Br.	N1 M M29 M48	42 57 12 27
BPOP/Pd	M M41 M48	45 00 15 30
Wilhelmstr.	M M48	46 01 16 31
Mi/Mic	N6	47 02 17 32
Jerus. Str.		49 04 19 34
Sp	N42	50 05 20 35
RHO	N8 N40 N42 N65	52 07 22 37
Marienkirche	N5 N8 M M4 M5 N40 N42 N65	53 08 23 38
BALX (Memh.)	N5 N8 M M2 M4 M5 N40 N42 N65	10 40
BALX (Memh.)	N5 N8 M M2 M4 M5 N40 N42 N65	15 45
Lu		19 49
Sz		21 51
EB	M M1 M10	24 54
BSAL/Sh	M M1	27 57
Bornh. Str.	M M1 M13	28 58
VIN	M M1	30 00
BPKW/PA	M M1 M M27 N50	33 03

N6 → U Alt-Mariendorf

Tg	N22 N24 N25 N33	07 37
Bk		09 39
Hh	N33	11 41
Otisstraße		13 43
Scha		15 45
Sch	M M21	18 48
Afr		21 51
Rb		22 52
Se	M M13 N20 N26	25 55
Lpo/Lpu	N9 N20	28 58
BWED/We	N20	29 59
Ri	M M27 N20	31 01
Sk		33 03
NA	M M10 N40	35 05
Ob (Torstr)		36 06
Ob	M M1	37 07
BFST/BFSTT/F	M M1	38 08
ULO/ULU		40 10
Mic	N2	41 11
Ks	M M29	43 13
Mehringbr.	N1	50 20
Me	N7 M M19 N42	53 23
Me	N7 M M19 N42	58 28
PL	N42	59 29
Ps		01 31
BTHF/Ts	N84	02 32
Ts (Ringb.)	N84	03 33
At	M M46 N84	04 34
Ka		06 36
Ull		08 38
Wl		10 40
Mf (Alt-M'df)	M M76 M77 N79	12 42
Mf (Reißeck)	M M76 M77 N79	13 43

N6 → U Alt-Tegel

Mf (Reißeck)	M M76 M77 N79	14 44
Mf (Alt-M'df)	M M76 M77 N79	16 46
Wl		17 47
Ull		19 49
Ka		21 51
At	M M46 N84	24 54
Ts (Ringb)	N84	25 55
BTHF/Ts	N84	26 56
Ps		28 58
PL	N42	29 59
Me	N7 M M19 N42	36 06
Mehringbr.	N1	39 09
Ks	M M29	42 12
Mic	N2	44 14
ULO/ULU		46 16
BFST/BFSTT/F	M M1	48 18
Ob	M M1	50 20
Ob (Torstr)		51 21
NA	M M10 N40	52 22
Sk		53 23
Ri	M M27 N20	55 25
BWED/WE	N20	56 26
Lpo/Lpu	N9 N20	58 28
Lpo/Lpu	N9 N20	02 32
Se	M M13 N20 N26	04 34
Rb		08 38
Afr		09 39
Sch	M M21	13 43
Scha		17 47
Otisstraße		18 48
Hh	N33	20 50
Bk		22 52
Tg	N22 N24 N25 N33	24 54

N8 → S+U Hermannstraße

Wilhelmsr. D.	N24 N53	21 51
BWIN/WIU	M M21 N24	25 55
WIU (U)	M M21 N24	26 56
RR (Eichb.)		28 58
BKBO/KB	M M21	31 01
LD		33 03
PB	N20	35 05
PB (Aros.A.)	N20	36 06
RE		38 08
FN		40 10
Olu (Troms.)	N9 M M13 N52	42 12
Olu (Troms.)	N9 M M13 N52	44 14
Pk	M M27	47 17
BGB/Gb		49 19
Vo		52 22
B	M M10	53 23
Ro	M M1 N40	55 25
W (Gipsstr)	M M1 N40 N42 N65	56 26
BALX (Memh.)	N2 N5 M M2 M4 M5 N40 N42 N65	58 28
BALX (Memh.)	N2 N5 M M2 M4 M5 N40 N42 N65	00 30
RHO	N2 N40 N42 N65	02 32
BJB/Jn	N40 N65	04 34
He	N65	06 36
Mr	M M29	08 38
Kbu (Adalb)	N1	12 42
ST		15 45
Hpo/Hpu (W)	N7 M M29 M41 N94	16 46
Hpo/Hpu (W)	N7 M M29 M41 N94	18 48
Bo		19 49
L		21 51
HMS	M M44 N79	23 53

N8 → Wilhelmsruher Damm

HMS	M M44 N79	02 32
L		04 34
Bo		06 36
Hpo/Hpu (O)	N7 M M29 M41 N94	09 39
Hpo/Hpu (O)	N7 M M29 M41 N94	12 42
ST		14 44
Kbu (Adalb)	N1	17 47
Mr	M M29	20 50
He	N65	22 52
BJB/Jn	N40 N65	23 53
RHO	N2 N40 N42 N65	24 54
Marienkirche	N2 N5 M M4 M5 N40 N42 N65	25 55
W	N2 N5 M M1 N40 N42 N65	31 01
Ro	M M1 N40	32 02
B	M M10 N40	35 05
Vo		36 06
BGB/Gb		38 08
Pk	M M27	40 10
Olo/Olu	N9 M M13 N52	44 14
FN		46 16
RE		48 18
PB	N20	51 21
LD		53 23
KB	M M21	55 25
RR (Eichb)		58 28
BWIN/WIU	M M21 N24	01 31
Wilhelmsr. D.	N24 N53	07 37

N5 → S+U Alexanderplatz/Memhardstr.

Riesaer Str.	M M6 N95	11 41
Hö		14 44
LL		15 45
Hd	M M6	19 49
C		21 51
GK		23 53
KL	N91	26 56
BWT/Wh	N69 N90 N91 N95	29 59
BWT/Wh	N69 N90 N91 N95	31 46 01 16
Alt-Biesdorf		34 49 04 19
Rhinstr.	M M17	39 54 09 24
R.-Uhrig-Str.		40 55 10 25
Lbg.Br.(Nord)	N50 N94	41 56 11 26
Md (Atzp.)	N50 N56 N94	42 57 12 27
Md (Atzp.)	N50 N56 N94	44 57 14 27
BFA/Ff	M M13	46 59 16 29
Sa		48 01 18 31
Ft	M M10	49 02 19 32
WR		51 04 21 34
Sr		53 06 23 36
Si		55 08 25 38
A/Al/Ap (U)	M M4 M5 N65	56 09 26 39
BALX (Memh.s)	N2 N8 M M2 M4 M5 N40 N42 N65	58 11 28 41

N5 → Riesaer Straße

A/Al/Ap (U)	M M4 M5 N65	02 19 32 49
Si		04 21 34 51
Sr		06 23 36 53
WR		08 25 38 55
Ft	M M10	10 27 40 57
Sa		12 29 42 59
Ff	M M13	14 31 44 01
Md (Atzp.)	N50 N56 N94	16 33 46 03
Md (Atzp.)	N50 N56 N94	18 33 48 03
Lbg.Br. (Süd)	N50 N94	19 34 49 04
R.-Uhrig-Str.		21 36 51 06
Rhinstr.	M M17	22 37 52 07
Alt-Biesdorf		27 42 57 12
BWT/Wh	N69 N90 N91 N95	31 46 01 16
KL	N91	35 05
GK		37 07
C		39 09
Hd	M M6	41 11
LL		45 15
Hö		46 16
Riesaer Str.	M M6 N95	48 18

N7 → Flughafen Schönefeld

			WE
BSPA (Seegef)	M32 M37 M45 N30 N34	07 37	
RSp (Altst)	M32 M37 M45 N30 N34	08 38	
AS		10 40	
Zi		11 41	
Hs	N33	13 43	
P	N39	15 45	
Rm	N23 N39	17 47	
Sie		19 49	
Halemweg		21 51	
JK (West)	M21	24 54	
BJUN (Dohrn)	M21 M27	26 56	
Mp (Meitner)	M27	28 58	
Rw	M45	30 00	
Bmo/Bmu	N2	32 02	
Ks-Friedr.-S.	M49	34 04	
BCHS		35 05	
Ad (Brandb.)	M19 M29 N10	37 07	
Ad (Brandb.)	M19 M29 N10	40 10	
Kn		43 13	
Fpo/Fpu	N3 N42	44 14	
Bli (Uhland)	N42	46 16	
Beo/Beu (Bln)	N9 N42	48 18	
Beo/Beu (Bln)	N9 N42	53 23	
Bpo/Bpu		54 24	
Grunewaldstr.	M46	54 24	
Ei		55 25	
Kt	M48	57 27	
BGGS/Y	M19	59 29	
BYOR/Y	M19	00 30	
Großbeerenstr	M19	02 32	
Me	N6 M19 N42	03 33	
Gs		05 35	
Sü		08 38	
Hpo/Hpu (O)	N8 M29 M41 N94	11 41	
Hpo/Hpu (O)	N8 M29 M41 N94	13 43	
Hpo/Hpu (W)	N8 M29 M41 N94	14 44	
Hpo/Hpu (W)	N8 M29 M41 N94	18 48	
Rk	N94	21 51	
KM		22 52	
BNK/Nk	N79	24 54	
Nk (Lahnstr)	N79	25 55	
Gz		26 56	
Gz (Jahnstr)		27 57	
Buschkrug		29 59	
Parchim. All.	M46	31 01	
Gutschmidtstr		34 04	
Johann. Ch.	M11	36 06	
Lipschitzall.	M11	38 08	
Wutzkyallee	M11	39 09	
Zwickauer D.	M11	40 10	
R		43 13	47 17
BFLH	N60	51 21	55 25
SXF ✈	N60	53 23	57 27

N7 → S+U Rathaus Spandau

			WE
SXF ✈	N60	06 36	03 33
BFLH	N60	08 38	05 35
R		15 45	12 42
Zwickauer D.	M11	17 47	
Wutzkyallee	M11	18 48	
Lipschitzall.	M11	19 49	
Johann. Ch.	M11	21 51	
Gutschmidtstr		23 53	
Parchim. All.	M46	26 56	
Buschkrug		28 58	
Gz (Jahnstr)		30 00	
Gz		31 01	
Nk (Lahnstr)		32 02	
BNK/Nk	N79	33 03	
KM		35 05	
Rk	N94	37 07	
Hpo/Hpu (O)	N8 M29 M41 N94	39 09	
Hpo/Hpu (O)	N8 M29 M41 N94	43 13	
Hpo/Hpu (W)	N8 M29 M41 N94	44 14	
Hpo/Hpu (W)	N8 M29 M41 N94	48 18	
Sü		51 21	
Gs		54 24	
Me	N6 M19 N42	56 26	
Großbeerenstr	M19	57 27	
BYOR/Y	M19	59 29	
BGGS/Y	M19	00 30	
Kt	M48	02 32	
Ei		04 34	
Grunewaldstr.	M46	05 35	
Bpo/Bpu		05 35	
Beo/Beu	N9 N42	07 37	
Bli (Uhland)	N42	09 39	
Bli	N42	10 40	
Fpo/Fpu	N3 N42	11 41	
Fpo/Fpu	N3 N42	14 44	
Kn		15 45	
Ad	M19 M29 N10	17 47	
BCHS		18 48	
Ks-Friedr.-S.	M49	19 49	
Bmo/Bmu	N2	22 52	
Rw	M45	24 54	
Mp (Osnabr)	M27	26 56	
BJUN (Olbers)	M21 M27	28 58	
BJUN (Teg.W.)	M27	29 59	
JK (Ost)	M21	30 00	
Halemweg		33 03	
Sie		35 05	
Rm	N23 N39	37 07	
P	N39	39 09	
Hs	N33	41 11	
Hs	N33	44 14	
Zi		46 16	
AS		47 17	
RSp (Altst)	M32 M37 M45 N30 N34	50 20	

N9 → S+U Rathaus Steglitz

Olo/Olu	N8 M13 N52	06 21 36 51	
Np		09 24 39 54	
Lpo/Lpu	N6 N20	11 26 41 56	
Lpo/Lpu	N6 N20	11 29 41 59	
Am		13 31 43 01	
BWF/WF		15 33 45 03	
Bi		16 34 46 04	
Tm (Stromstr)	M27 N40	17 35 47 05	
Tm (Stromstr)	M27 N40	19 35 49 05	
Bachstraße		21 37 51 07	
BTGN		22 38 52 08	
BZOS/Zo/Zu	N1 N2 M45 M46 M49 N10 N26	26 42 56 12	
BZOS/Zo/Zu	N1 N2 M45 M46 M49 N10 N26	45	15
Kfo/Kfu	N1 N2 N3 M19 M29 M46 N10 N26	47	17
Sno/Snu	N3	50	20
Gt		51	21
Beo/Beu	N7 N42	53	23
BBUP/Bu		56	26
Fw		58	28
Wsg	M48 M76 N81	01	31
Slo/Slu	M48	02	32
BRST/Rzu	M48 M82 M85 N88	05	35

N9 → U Osloer Straße

BRST/Rzu	M48 M82 M85 N88	28	58
Slo/Slu	M48	30	00
Wsg	M48 M76 N81	32	02
Fw		34	04
BBUP/Bu		35	05
Beo/Beu	N7 N42	38	08
Gt		40	10
Sno/Snu	N3	41	11
Kfo/Kfu	N1 N2 N3 M19 M29 M46 N10 N26	43	13
BZOS (Jebens)	N1 N2 M45 M46 M49 N10 N26	44	14
BZOS (Jebens)	N1 N2 M45 M46 M49 N10 N26	30 45 00	15
BTGN		33 48 03	18
Bachstraße		34 49 04	19
Tm (Stromstr)	M27 N40	37 52 07	22
Bi		39 54 09	24
BWF/WF		40 55 10	25
Am		42 57 12	27
Lpo/Lpu	N6 N20	45 00 15	30
Lpo/Lpu	N6 N20	45 02 15	32
Np		47 04 17	34
Olo/Olu	N8 M13 N52	50 07 20	37

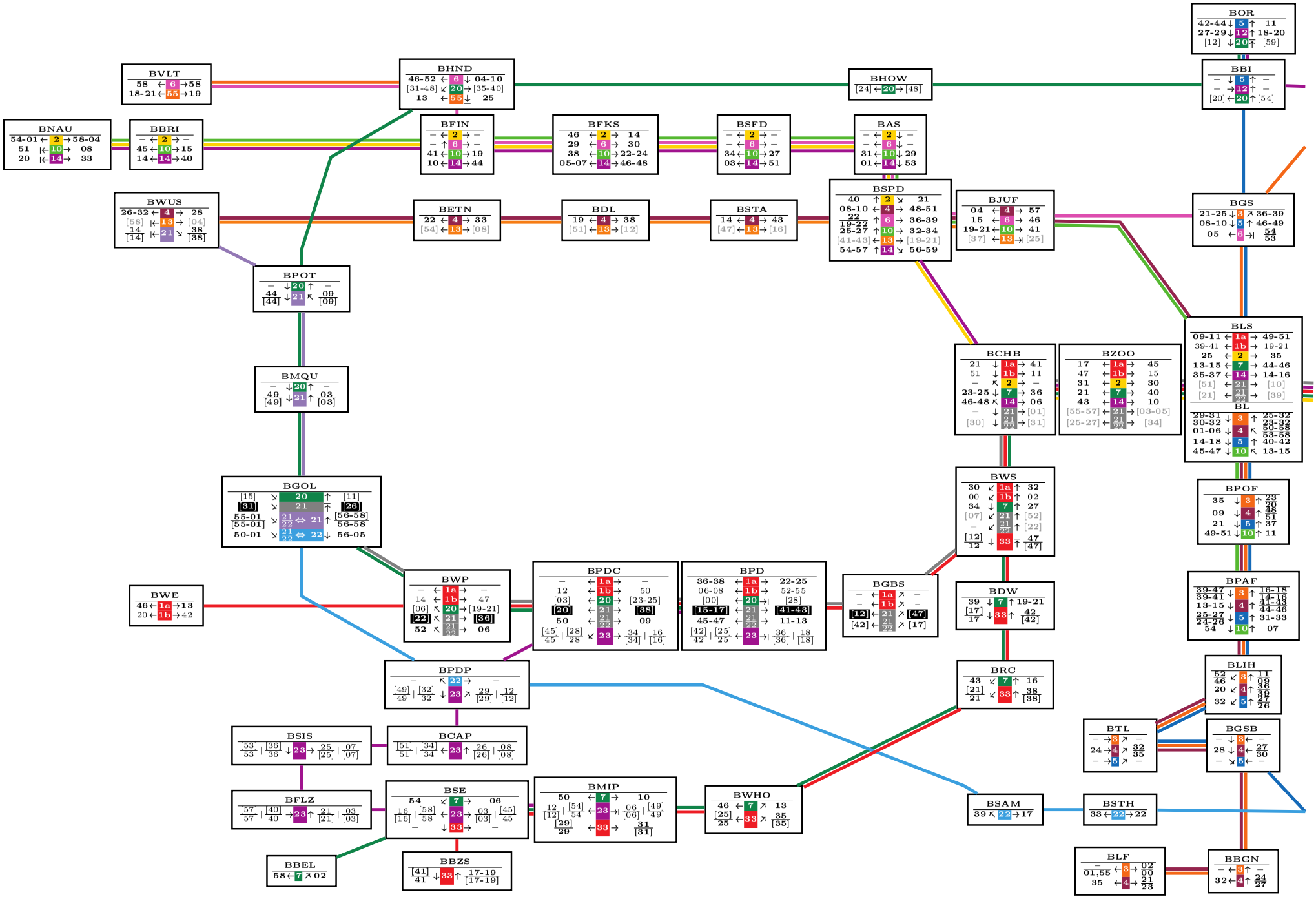
BOR
42-44 ↓ 5 ↑ 11
27-29 ↓ 12 ↑ 18-20
[12] ↓ 20 ↑ [59]
BVLT
58 ← 6 → 58
18-21 ← 55 → 19
BHND
46-52 ← 6 ↓ 04-10
[31-48] ↙ 20 → [35-40]
13 ← 55 ↓ 25
BHOW
[24] ← 20 → [48]
BBI
– ↓ 5 ↑ –
– → 12 ↑ –
[20] ← 20 ↑ [54]
BNAU
54-01 ← 2 → 58-04
51 |← 10 → 08
20 |← 14 → 33
BBRI
– ← 2 → –
45 ← 10 → 15
14 ← 14 → 40
BFIN
– ← 2 → –
– ↑ 6 → –
41 ← 10 → 19
10 ← 14 → 44
BFKS
46 ← 2 → 14
29 ← 6 → 30
38 ← 10 → 22-24
05-07 ← 14 → 46-48
BSFD
– ← 2 → –
– ← 6 → –
34 ← 10 → 27
03 ← 14 → 51
BAS
– ← 2 ↓ –
– ← 6 ↓ –
31 ← 10 ↓ 29
01 ← 14 ↓ 53
BWUS
26-32 ← 4 → 28
[58] |← 13 → [04]
14/[14] |← 21 ↘ 38/[38]
BETN
22 ← 4 → 33
[54] ← 13 → [08]
BDL
19 ← 4 → 38
[51] ← 13 → [12]
BSTA
14 ← 4 → 43
[47] ← 13 → [16]
BSPD
40 ↑ 2 ↘ 21
08-10 ← 4 → 48-51
22/19-22 ↑ 6 → 36-39
25-27 ↑ 10 → 32-34
[41-43] ← 13 → [19-21]
54-57 ↑ 14 ↘ 56-59
BJUF
04 ← 4 → 57
15 ← 6 → 46
19-21 ← 10 → 41
[37] ← 13 →| [25]
BGS
21-25 ↓ 3 ↗ 36-39
08-10 ↓ 5 ↑ 46-49
05 ← 9 →| 54/53
BPOT
– ↓ 20 ↑ –
44/[44] ↓ 21 ↖ 09/[09]
BLS
09-11 ← 1a → 49-51
39-41 ← 1b → 19-21
25 ← 2 → 35
13-15 ← 7 → 44-46
35-37 ← 14 → 14-16
[51] ← 21 → [10]
[21] ← 21/22 → [39]
BL
29-31 ↓ 3 ↑ 25-32/23-32
30-32 ↓ 4 ↖ 50-58/53-58
01-06 ↓ 5 ↑ 40-42
14-18 ↓ 10 ↖ 13-15
45-47
BCHB
21 ↓ 1a → 41
51 ↓ 1b → 11
– ↖ 2 → –
23-25 ↓ 7 → 36
46-48 ↖ 14 → 06
– ↓ 21 → [01]
[30] ↓ 21/22 → [31]
BZOO
17 ← 1a → 45
47 ← 1b → 15
31 ← 2 → 30
21 ← 7 → 40
43 ← 14 → 10
[55-57] ← 21 → [03-05]
[25-27] ← 21/22 → [34]
BMQU
– ↓ 20 ↑ –
49/[49] ↓ 21 ↑ 03/[03]
BGOL
[15] ↘ 20 ↑ [11]
[31] ↘ 21 ↑ [26]
55-01/[55-01] ↘ 21/22 ↔ 21 ↑ [56-58]/56-58
50-01 ↘ 21/22 ↔ 22 ↓ 56-05
BWS
30 ↙ 1a ↑ 32
00 ↙ 1b ↑ 02
34 ↓ 7 ↑ 27
[07] ↙ 21 ↑ [52]
– ↙ 21/22 ↑ [22]
[12]/12 ↓ 33 ↑ 47/[47]
BPOF
35 ↓ 3 ↑ 23/20
09 ↓ 4 ↑ 48/51
21 ↓ 5 ↑ 37
49-51 ↓ 10 ↑ 11
BWE
46 ← 1a → 13
20 ← 1b → 42
BWP
– ← 1a → –
14 ← 1b → 47
[06] ↖ 20 → [19-21]
[22] ↖ 21 → [36]
52 ↖ 21/22 → 06
BPDC
– ← 1a → –
12 ← 1b → 50
[03] ← 20 → [23-25]
[20] ← 21 → [38]
50 ← 21/22 → 09
[45]/45 | [28]/28 ↙ 23 → 34/[34] | 16/[16]
BPD
36-38 ← 1a → 22-25
06-08 ← 1b → 52-55
[00] ← 20 →| [28]
[15-17] ← 21 → [41-43]
45-47 ← 21/22 → 11-13
[42]/42 | [25]/25 ← 23 →| 36/[36] | 18/[18]
BGBS
– ← 1a ↗ –
– ← 1b ↗ –
[12] ← 21 ↗ [47]
[42] ← 21/22 ↗ [17]
BDW
39 ↓ 7 ↑ 19-21
[17]/17 ↓ 33 ↑ 42/[42]
BPAF
39-47/39-41 ↓ 3 ↑ 16-18/14-16
13-15 ↓ 4 ↑ 41-43/44-46
25-27/24-26 ↓ 5 ↑ 31-33
54 ↓ 10 ↑ 07
BPDP
– ↖ 22 → –
[49]/49 | [32]/32 ↓ 23 ↗ 29/[29] | 12/[12]
BRC
43 ↙ 7 ↑ 16
[21]/21 ↙ 33 ↑ 38/[38]
BLIH
52/46 ↙ 3 ↑ 11/09
20 ↙ 4 ↑ 36/39
32 ↙ 5 ↑ 27/26
BSIS
[53]/53 | [36]/36 ↓ 23 → 25/[25] | 07/[07]
BCAP
[51]/51 | [34]/34 ← 23 ↑ 26/[26] | 08/[08]
BTL
– → 3 ↗ –
24 → 4 ↗ 32/35
– → 5 ↗ –
BGSB
– ↓ 3 ← –
28 ↓ 4 ← 27/30
– ↘ 5 ← –
BFLZ
57/57 | 40/40 → 23 ↑ 21/[21] | 03/[03]
BSE
54 ↙ 7 → 06
16/[16] | 58/58 ← 23 → 03/[03] | 45/45
– ↓ 33 → –
BMIP
50 ← 7 → 10
12/[12] | 54/54 ← 23 →| 06/[06] | 49/49
29/29 ← 33 → 31/[31]
BWHO
46 ← 7 ↗ 13
25/[25] ← 33 ↗ 35/[35]
BSAM
39 ↖ 22 → 17
BSTH
33 ← 22 → 22
BBEL
58 ← 7 ↗ 02
BBZS
41/[41] ↓ 33 ↑ 17-19/[17-19]
BLF
– ← 3 → 02/00
01,55 / 35 ← 4 → 21/23
BBGN
– ← 3 ↑ –
32 ← 4 ↑ 24/27

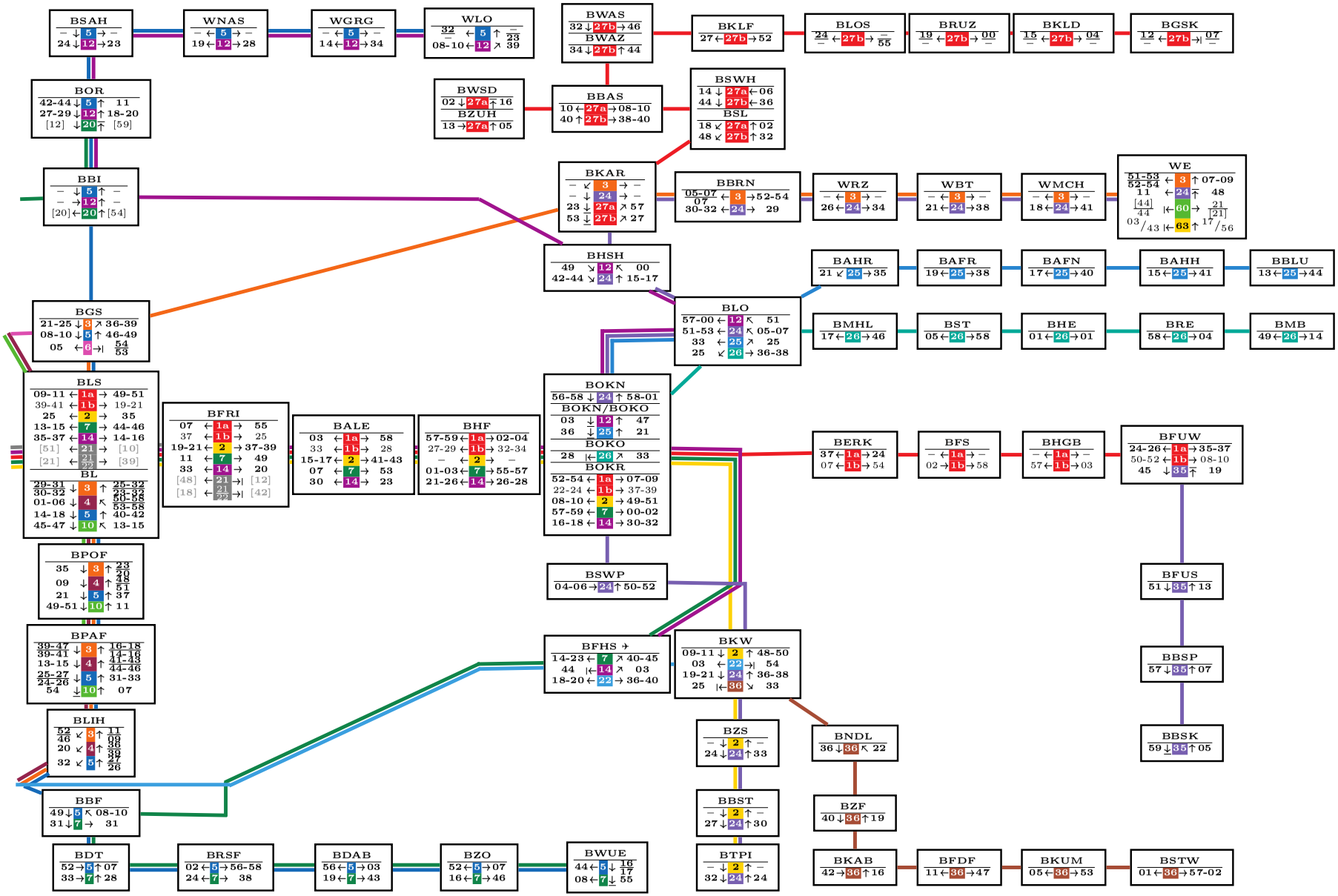
BSAH
WNAS
WGRG
WLO
BWAS
BWAZ
BKLF
BLOS
BRUZ
BKLD
BGSK
BOR
BWSD
BZUH
BBAS
BSWH
BSL
BBI
BKAR
BBRN
WRZ
WBT
WMCH
WE
BHSH
BAHR
BAFR
BAFN
BAHH
BBLU
BGS
BLO
BMHL
BST
BHE
BRE
BMB
BLS
BL
BFRI
BALE
BHF
BOKN
BOKN/BOKO
BOKO
BOKR
BERK
BFS
BHGB
BFUW
BPOF
BSWP
BFUS
BPAF
BFHS
BKW
BBSP
BLIH
BZS
BNDL
BBSK
BBF
BBST
BZF
BDT
BRSF
BDAB
BZO
BWUE
BTPI
BKAB
BFDF
BKUM
BSTW

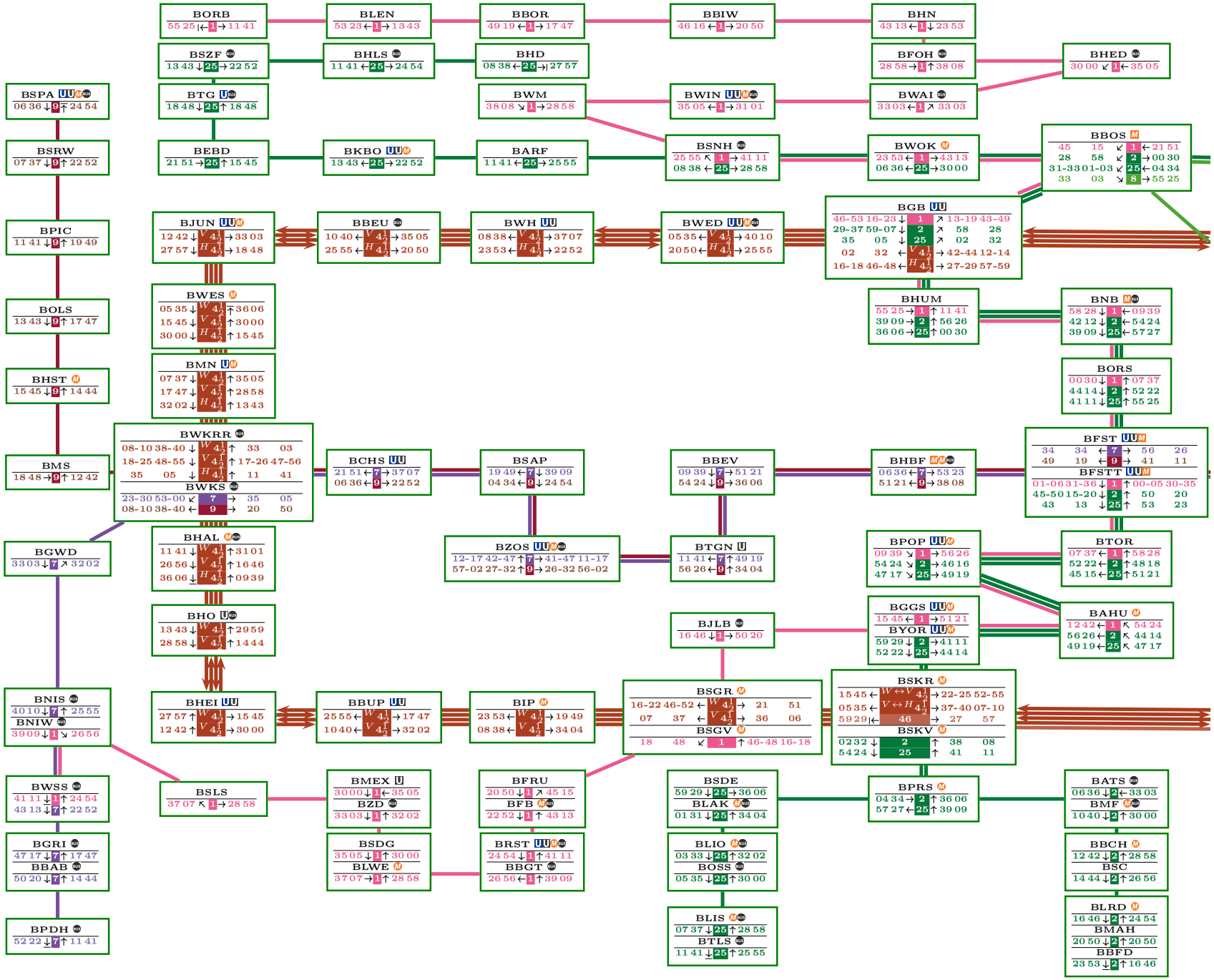
BORB
55 25 ← 1 → 11 41
BLEN
53 23 ← 1 → 13 43
BBOR
49 19 ← 1 → 17 47
BBIW
46 16 ← 1 → 20 50
BHN
43 13 ← 1 ↓ 23 53
BSZF
13 43 ↓ 25 → 22 52
BHLS
11 41 ← 25 → 24 54
BHD
08 38 ← 25 → 27 57
BFOH
28 58 → 1 ↑ 38 08
BHED
30 00 ↙ 1 ← 35 05
BSPA
06 36 ↓ 9 ↑ 24 54
BTG
18 48 ↓ 25 ↑ 18 48
BWM
38 08 ↘ 1 → 28 58
BWIN
35 05 ← 1 → 31 01
BWAI
33 03 ← 1 ↗ 33 03
BSRW
07 37 ↓ 9 ↑ 22 52
BEBD
21 51 → 25 ↑ 15 45
BKBO
13 43 ← 25 → 22 52
BARF
11 41 ← 25 → 25 55
BSNH
25 55 ↖ 1 → 41 11
08 38 ← 25 → 28 58
BWOK
23 53 ← 1 → 43 13
06 36 ← 25 → 30 00
BBOS
45 15 ↙ 1 ← 21 51
28 58 ↙ 2 → 00 30
31-33 01-03 ↙ 25 ← 04 34
33 03 ↘ 8 → 55 25
BPIC
11 41 ↓ 9 ↑ 19 49
BJUN
12 42 ↓ V 4 1/2 → 33 03
27 57 ↓ H 4 1/2 → 18 48
BBEU
10 40 ← V 4 1/2 → 35 05
25 55 ← H 4 1/2 → 20 50
BWH
08 38 ← V 4 1/2 → 37 07
23 53 ← H 4 1/2 → 22 52
BWED
05 35 ← V 4 1/2 → 40 10
20 50 ← H 4 1/2 → 25 55
BGB
46-53 16-23 ↓ 1 ↗ 13-19 43-49
29-37 59-07 ↓ 2 ↗ 58 28
35 05 ↓ 25 ↗ 02 32
02 32 ← V 4 1/2 → 42-44 12-14
16-18 46-48 ← H 4 1/2 → 27-29 57-59
BOLS
13 43 ↓ 9 ↑ 17 47
BWES
05 35 ↓ W 4 1/2 ↑ 36 06
15 45 ↓ V 4 1/2 ↑ 30 00
30 00 ↓ H 4 1/2 ↑ 15 45
BHUM
55 25 → 1 ↑ 11 41
39 09 → 2 ↑ 56 26
36 06 → 25 ↑ 00 30
BNB
58 28 ↓ 1 ← 09 39
42 12 ↓ 2 ← 54 24
39 09 ↓ 25 ← 57 27
BHST
15 45 ↓ 9 ↑ 14 44
BMN
07 37 ↓ W 4 1/2 ↑ 35 05
17 47 ↓ V 4 1/2 ↑ 28 58
32 02 ↓ H 4 1/2 ↑ 13 43
BORS
00 30 ↓ 1 ↑ 07 37
44 14 ↓ 2 ↑ 52 22
41 11 ↓ 25 ↑ 55 25
BMS
18 48 → 9 ↑ 12 42
BWKRR
08-10 38-40 ↓ W 4 1/2 ↑ 33 03
18-25 48-55 ↓ V 4 1/2 ↑ 17-26 47-56
35 05 ↓ H 4 1/2 ↑ 11 41
BWKS
23-30 53-00 ↙ 7 → 35 05
08-10 38-40 ← 9 → 20 50
BCHS
21 51 ← 7 → 37 07
06 36 ← 9 → 22 52
BSAP
19 49 ← 7 ↓ 39 09
04 34 ← 9 ↓ 24 54
BBEV
09 39 ↓ 7 → 51 21
54 24 ↓ 9 → 36 06
BHBF
06 36 ← 7 → 53 23
51 21 ← 9 → 38 08
BFST
34 34 ← 7 → 56 26
49 19 ← 9 → 41 11
BFSTT
01-06 31-36 ↓ 1 ↑ 00-05 30-35
45-50 15-20 ↓ 2 ↑ 50 20
43 13 ↓ 25 ↑ 53 23
BGWD
33 03 ↓ 7 ↗ 32 02
BHAL
11 41 ↓ W 4 1/2 ↑ 31 01
26 56 ↓ V 4 1/2 ↑ 16 46
36 06 ↓ H 4 1/2 ↑ 09 39
BZOS
12-17 42-47 ↑ 7 → 41-47 11-17
57-02 27-32 ↑ 9 → 26-32 56-02
BTGN
11 41 ← 7 ↑ 49 19
56 26 ← 9 ↑ 34 04
BPOP
09 39 ↘ 1 → 56 26
54 24 ↘ 2 → 46 16
47 17 ↘ 25 → 49 19
BTOR
07 37 ← 1 ↑ 58 28
52 22 ← 2 ↑ 48 18
45 15 ← 25 ↑ 51 21
BHO
13 43 ↓ W 4 1/2 ↑ 29 59
28 58 ↓ V 4 1/2 ↑ 14 44
BJLB
16 46 ↓ 1 → 50 20
BGGS
15 45 ← 1 → 51 21
BYOR
59 29 ↓ 2 → 41 11
52 22 ↓ 25 → 44 14
BAHU
12 42 ← 1 ↖ 54 24
56 26 ← 2 ↖ 44 14
49 19 ← 25 ↖ 47 17
BNIS
40 10 ↓ 7 ↑ 25 55
BNIW
39 09 ↓ 1 ↘ 26 56
BHEI
27 57 ↑ W 4 1/2 → 15 45
12 42 ↑ V 4 1/2 → 30 00
BBUP
25 55 ← W 4 1/2 → 17 47
10 40 ← V 4 1/2 → 32 02
BIP
23 53 ← W 4 1/2 → 19 49
08 38 ← V 4 1/2 → 34 04
BSGR
16-22 46-52 ← W 4 1/2 → 21 51
07 37 ← V 4 1/2 → 36 06
BSGV
18 48 ↙ 1 ↑ 46-48 16-18
BSKR
15 45 ← W ↔ V 4 1/2 → 22-25 52-55
05 35 ← V ↔ H 4 1/2 → 37-40 07-10
59 29 |← 46 → 27 57
BSKV
02 32 ↓ 2 ↑ 38 08
54 24 ↓ 25 ↑ 41 11
BWSS
41 11 ↓ 1 ↑ 24 54
43 13 ↓ 7 ↑ 22 52
BSLS
37 07 ↖ 1 → 28 58
BMEX
30 00 ↓ 1 ← 35 05
BZD
33 03 ↓ 1 ↑ 32 02
BFRU
20 50 ↓ 1 ↗ 45 15
BFB
22 52 ↓ 1 ↑ 43 13
BSDE
59 29 ↓ 25 → 36 06
BLAK
01 31 ↓ 25 ↑ 34 04
BPRS
04 34 → 2 ↑ 36 06
57 27 ← 25 ↑ 39 09
BATS
06 36 ↓ 2 ← 33 03
BMF
10 40 ↓ 2 ↑ 30 00
BGRI
47 17 ↓ 7 ↑ 17 47
BBAB
50 20 ↓ 7 ↑ 14 44
BSDG
35 05 ↓ 1 ↑ 30 00
BLWE
37 07 → 1 ↑ 28 58
BRST
24 54 ↓ 1 ↑ 41 11
BBGT
26 56 ← 1 ↑ 39 09
BLIO
03 33 ↓ 25 ↑ 32 02
BOSS
05 35 ↓ 25 ↑ 30 00
BBCH
12 42 ↓ 2 ↑ 28 58
BSC
14 44 ↓ 2 ↑ 26 56
BPDH
52 22 ↓ 7 ↑ 11 41
BLIS
07 37 ↓ 25 ↑ 28 58
BTLS
11 41 ↓ 25 ↑ 25 55
BLRD
16 46 ↓ 2 ↑ 24 54
BMAH
20 50 ↓ 2 ↑ 20 50
BBFD
23 53 ↓ 2 ↑ 16 46

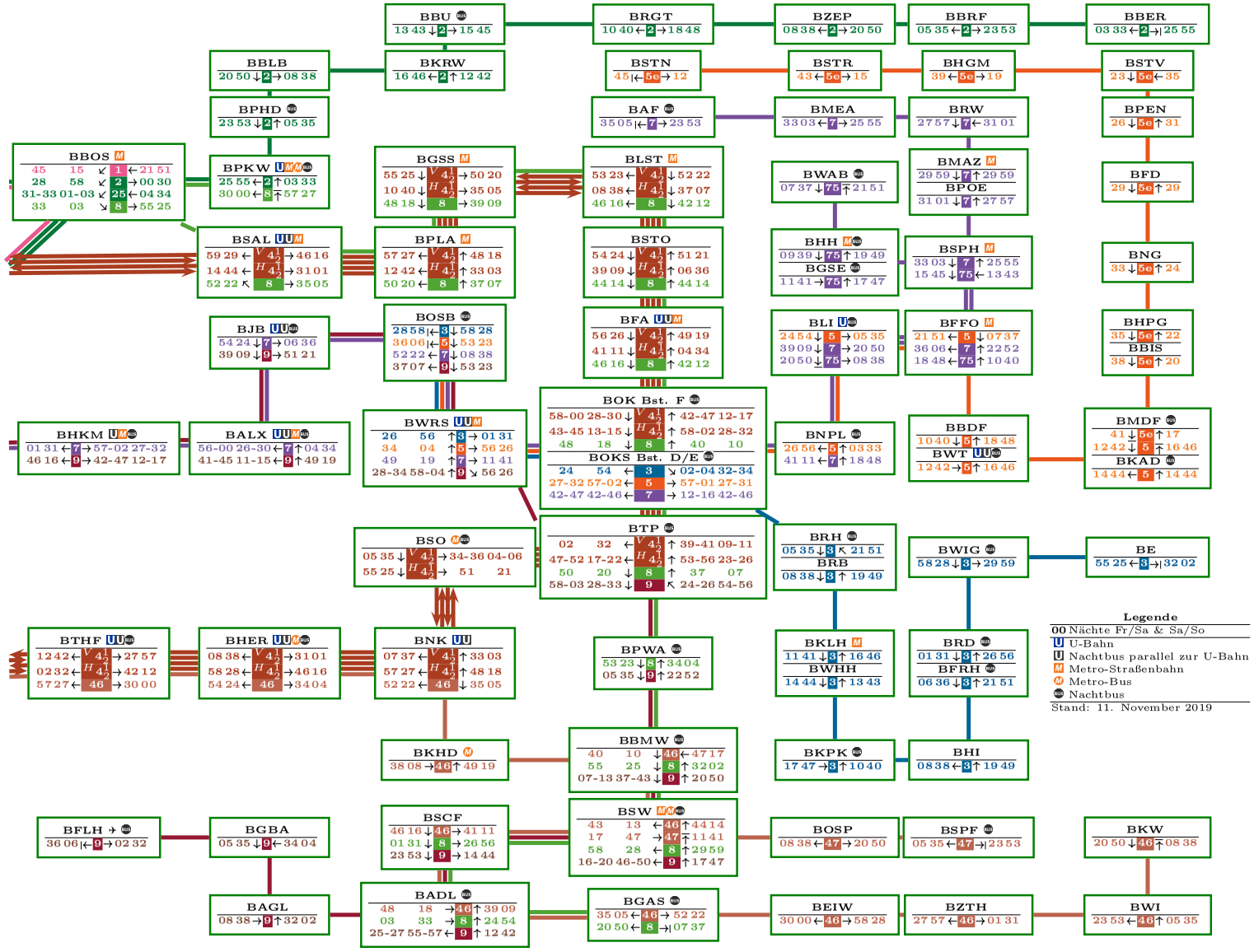
BBU
13 43 ↓ 2 → 15 45
BRGT
10 40 ← 2 → 18 48
BZEP
08 38 ← 2 → 20 50
BBRF
05 35 ← 2 → 23 53
BBER
03 33 ← 2 → 25 55
BBLB
20 50 ↓ 2 → 08 38
BKRW
16 46 ← 2 ↑ 12 42
BSTN
45 ← 5e → 12
BSTR
43 ← 5e → 15
BHGM
39 ← 5e → 19
BSTV
23 ↓ 5e ← 35
BPHD
23 53 ↓ 2 ↑ 05 35
BAF
35 05 ← 7 → 23 53
BMEA
33 03 ← 7 → 25 55
BRW
27 57 ↓ 7 ← 31 01
BPEN
26 ↓ 5e ↑ 31
BBOS M
45 15 ↙ 1 ← 21 51
28 58 ↙ 2 → 00 30
31-33 01-03 ↙ 25 ← 04 34
33 03 ↘ 8 → 55 25
BPKW U M M
25 55 ← 2 ↑ 03 33
30 00 ← 8 → 57 27
BGSS M
55 25 ↓ V 4½ → 50 20
10 40 ↓ H 4½ → 35 05
48 18 ↓ 8 → 39 09
BLST M
53 23 ← V 4½ ↓ 52 22
08 38 ← H 4½ ↓ 37 07
46 16 ← 8 ↓ 42 12
BWAB
07 37 ↓ 75 → 21 51
BMAZ M
29 59 ↓ 7 ↑ 29 59
BPOE
31 01 ↓ 7 ↑ 27 57
BFD
29 ↓ 5e ↑ 29
BSAL U U M
59 29 ← V 4½ → 46 16
14 44 ← H 4½ → 31 01
52 22 ↖ 8 → 35 05
BPLA M
57 27 ← V 4½ ↑ 48 18
12 42 ← H 4½ ↑ 33 03
50 20 ← 8 → 37 07
BSTO
54 24 ↓ V 4½ ↑ 51 21
39 09 ↓ H 4½ ↑ 06 36
44 14 ↓ 8 → 44 14
BHH M
09 39 ↓ 75 ↑ 19 49
BGSE
11 41 → 75 ↑ 17 47
BSPH M
33 03 ↓ 7 → 25 55
15 45 ↓ 75 ← 13 43
BNG
33 ↓ 5e ↑ 24
BJB U U
54 24 ↓ 7 → 06 36
39 09 ↓ 9 → 51 21
BOSB
28 58 ← 3 ↓ 58 28
36 06 ← 5 ↓ 53 23
52 22 ← 7 ↓ 08 38
37 07 ← 9 ↓ 53 23
BFA U U M
56 26 ↓ V 4½ ↑ 49 19
41 11 ↓ H 4½ ↑ 04 34
46 16 ↓ 8 → 42 12
BLI U
24 54 ↓ 5 → 05 35
39 09 ↓ 7 → 20 50
20 50 ↓ 75 → 08 38
BFFO M
21 51 ← 5 ↓ 07 37
36 06 ← 7 ↑ 22 52
18 48 ← 75 ↑ 10 40
BHPG
35 ↓ 5e ↑ 22
BBIS
38 ↓ 5e ↑ 20
BHKM U M
01 31 ← 7 → 57-02 27-32
46 16 ← 9 → 42-47 12-17
BALX U U M
56-00 26-30 ← 7 ↑ 04 34
41-45 11-15 ← 9 ↑ 49 19
BWRS U U M
26 56 ↑ 3 → 01 31
34 04 ↑ 5 → 56 26
49 19 ↑ 7 → 11 41
28-34 58-04 ↑ 9 ↘ 56 26
BOK Bst. F
58-00 28-30 ↓ V 4½ ↑ 42-47 12-17
43-45 13-15 ↓ H 4½ ↑ 58-02 28-32
48 18 ↓ 8 ↑ 40 10
BOKS Bst. D/E
24 54 ← 3 ↘ 02-04 32-34
27-32 57-02 ← 5 → 57-01 27-31
42-47 42-46 ← 7 → 12-16 42-46
BNPL
26 56 ← 5 ↑ 03 33
41 11 ← 7 ↑ 18 48
BBDF
10 40 ↓ 5 ↑ 18 48
BWT U U
12 42 → 5 ↑ 16 46
BMDF
41 ↓ 5e ↑ 17
12 42 ↓ 5 → 16 46
BKAD
14 44 ← 5 ↑ 14 44
BSO M
05 35 ↓ V 4½ → 34-36 04-06
55 25 ↓ H 4½ → 51 21
BTP
02 32 ← V 4½ ↑ 39-41 09-11
47-52 17-22 ← H 4½ ↑ 53-56 23-26
50 20 ↓ 8 ↑ 37 07
58-03 28-33 ↓ 9 ↖ 24-26 54-56
BRH
05 35 ↓ 3 ↖ 21 51
BRB
08 38 ↓ 3 ↑ 19 49
BWIG
58 28 ↓ 3 → 29 59
BE
55 25 ← 3 → 32 02
BTHF U U
12 42 ← V 4½ → 27 57
02 32 ← H 4½ → 42 12
57 27 ← 46 → 30 00
BHER U U M
08 38 ← V 4½ → 31 01
58 28 ← H 4½ → 46 16
54 24 ← 46 → 34 04
BNK U U
07 37 ← V 4½ ↑ 33 03
57 27 ← H 4½ ↑ 48 18
52 22 ← 46 ↓ 35 05
BPWA
53 23 ↓ 3 ↑ 34 04
05 35 ↓ 9 ↑ 22 52
BKLH M
11 41 ↓ 3 ↑ 16 46
BWHH
14 44 ↓ 3 ↑ 13 43
BRD
01 31 ↓ 3 ↑ 26 56
BFRH
06 36 ↓ 3 ↑ 21 51
BKHD M
38 08 → 46 ↑ 49 19
BBMW
40 10 ↓ 46 ← 47 17
55 25 ↓ 8 ↑ 32 02
07-13 37-43 ↓ 9 ↑ 20 50
BKPK
17 47 → 3 ↑ 10 40
BHI
08 38 ← 3 ↑ 19 49
BFLH
36 06 ← 9 → 02 32
BGBA
05 35 ↓ 9 ← 34 04
BSCF
46 16 ↓ 46 → 41 11
01 31 ↓ 8 → 26 56
23 53 ↓ 9 → 14 44
BSW M M
43 13 ← 46 ↑ 44 14
17 47 → 47 → 11 41
58 28 ← 8 ↑ 29 59
16-20 46-50 ← 9 ↑ 17 47
BOSP
08 38 ← 47 → 20 50
BSPF
05 35 ← 47 → 23 53
BKW
20 50 ↓ 46 → 08 38
BAGL
08 38 → 9 ↑ 32 02
BADL
48 18 → 46 ↑ 39 09
03 33 → 8 ↑ 24 54
25-27 55-57 ← 9 ↑ 12 42
BGAS
35 05 ← 46 → 52 22
20 50 ← 8 → 07 37
BEIW
30 00 ← 46 → 58 28
BZTH
27 57 ← 46 → 01 31
BWI
23 53 ← 46 ↑ 05 35
Legende
00 Nächte Fr/Sa & Sa/So
U U-Bahn
U Nachtbus parallel zur U-Bahn
M Metro-Straßenbahn
M Metro-Bus
Nachtbus
Stand: 11. November 2019

S1 (Fr/Sa)				S1 (Sa/So)				S1 (Fr/Sa)				S1 (Sa/So)			
BWSS	00:54	30	04:24	00:54	30	06:24		BORB	01:11	30	03:41	01:11	30	05:41	
BORB	02:25		05:55	02:25		07:55		BWSS	02:41		05:11	02:41		07:11	

S2 (Fr/Sa)				S2 (Sa/So)				S2 (Fr/Sa)				S2 (Sa/So)			
BBFD	00:46	30	03:46	00:46	30	05:46		BBER	01:03	30	03:03	01:03	30	05:03	
BBER	01:55		04:55	01:55		06:55		BBFD	02:23		04:23	02:23		06:23	

S25 (Fr/Sa)				S25 (Sa/So)				S25 (Fr/Sa)				S25 (Sa/So)			
BTLS	00:55	30	04:25	00:55	30	05:55		BHD	01:08	30	04:38	01:08	30	06:38	
BHD	01:57		05:27	01:57		06:57		BTLS	02:11		05:41	02:11		07:41	

S5 (Fr/Sa)				S5 (Sa/So)				S5 (Fr/Sa)				S5 (Sa/So)			
BMDF	01:12	30	04:12	01:12	30	06:12		BOSB	01:23	30	04:23	01:23	30	06:23	
BOSB	01:36		04:36	01:36		06:36		BMDF	01:46		04:46	01:46		06:46	

S7 (Fr/Sa)				S7 (Sa/So)				S7 (Fr/Sa)				S7 (Sa/So)			
BAF	01:23	30	03:53	01:23	30	05:53		BPDH	00:41	30	03:41	00:41	30	05:41	
BPDH	02:52		05:22	02:52		07:22		BAF	02:05		05:05	02:05		07:05	

S75 (Fr/Sa)				S75 (Sa/So)				S75 (Fr/Sa)				S75 (Sa/So)			
BWAB	01:37	30	04:07	01:37	30	06:07		BLI	01:38	30	04:38	01:38	30	06:38	
BLI	01:50		04:20	01:50		06:20		BWAB	01:51		04:51	01:51		06:51	

S3 (Fr/Sa)				S3 (Sa/So)				S3 (Fr/Sa)				S3 (Sa/So)			
BE	00:55	30	03:55	00:55	30	05:55		BOSB	01:28	30	04:58	01:34	30	06:58	
BOSB	01:28		04:28	01:28		06:28		BE	02:02		05:32	02:02		07:32	

S9 (Fr/Sa)				S9 (Sa/So)				S9 (Fr/Sa)				S9 (Sa/So)			
BFLH	01:02	30	04:02	01:02	30	06:02		BSPA	01:06	30	03:06	01:06	30	03:06	
BSPA	02:24		05:24	02:24		07:24		BFLH	02:36		04:36	02:36		06:36	

S5 (Fr/Sa)								S5 (Sa/So)								S5 (Fr/Sa)								S5 (Sa/So)							
BSTN			01:09	02:12	03:12					01:09	02:12	60	05:12			BMDF	02:17	60	04:17	02:17	60	06:17	
BST	00:40		01:23	02:23	03:23			00:40		01:23	02:23		05:23			BST	02:35		04:35	02:35		06:35	
BMDF	01:00		01:41	02:41	03:41			01:00		01:41	02:41		05:41			BSTN	02:45		04:45	02:45		06:45	

S8 (Fr/Sa)				S8 (Sa/So)				S8 (Fr/Sa)				S8 (Sa/So)			
BGAS	00:48	30	03:48	00:48	30	03:48		BPKW	01:30	30	04:30	01:30	30	04:30	
BPKW	01:26		04:26	01:26		04:26		BGAS	02:07		05:07	02:07		05:07	

S46 (Fr/Sa)				S46 (Sa/So)				S46 (Fr/Sa)				S46 (Sa/So)			
BKW	00:51	30	04:21	00:51	30	05:51		BSKR	01:27	30	03:57	01:27	30	03:57	
BSKR	01:30		05:00	01:30		06:30		BKW	02:08		04:38	02:08		04:38	

S47 (Fr/Sa)				S47 (Sa/So)				S47 (Fr/Sa)				S47 (Sa/So)			
BSPF	01:35	30	04:35	01:35	30	06:35		BSW	01:47	30	04:47	01:47	30	06:47	
BSW	01:41		04:41	01:41		06:41		BSPF	01:53		04:53	01:53		06:53	

S41 A (Fr/Sa)

von	↺	↺	↺	↺	↺	↺		↺	↺		↺	↺		HAL	↺		HAL	↺		HAL	↺		HAL	↺	HAL	↺		HAL
BSKR	00:26	00:36	00:46	00:56	01:06	01:16		01:35	01:46		02:05	02:15		02:35	02:45		03:05	03:15		03:35	03:45		04:05	04:15	04:35	04:46	04:56	05:06
BSGR o	00:27	00:37	00:47	00:57	01:07	01:17		01:36	01:47		02:06	02:16		02:36	02:46		03:06	03:16		03:36	03:46		04:06	04:16	04:36	04:47	04:57	05:06
BSGR	00:28	00:38	00:48	00:58	01:08	01:22		01:37	01:52		02:07	02:22		02:37	02:52		03:07	03:22		03:37	03:52		04:07	04:22	04:37	04:48	04:58	05:07
BHAL	00:37	00:47	00:57	01:07	01:17	01:31	01:39	01:46	02:01	02:09	02:16	02:31	02:39	02:46	03:01	03:09	03:16	03:31	03:39	03:46	04:01	04:09	04:16	04:31	04:46	04:57	05:07	05:16
BWKRR o	00:38	00:48	00:58	01:08	01:18	01:32	01:40	01:47	02:02	02:10	02:17	02:32	02:40	02:47	03:02	03:10	03:17	03:32	03:40	03:47	04:02	04:10	04:17	04:32	04:47	04:58	05:08	05:17
BWKRR	00:39	00:49	00:59	01:11	01:26	01:33	01:41	01:56	02:03	02:11	02:26	02:33	02:41	02:56	03:03	03:11	03:26	03:33	03:41	03:56	04:03	04:11	04:26	04:39	04:49	04:59	05:09	05:19
BWES	00:42	00:52	01:02	01:15	01:30	01:36	01:45	02:00	02:06	02:15	02:30	02:36	02:45	03:00	03:06	03:15	03:30	03:36	03:45	04:00	04:06	04:15	04:30	04:42	04:52	05:02	05:12	05:22
BGB o	00:55	01:05	01:15	01:27	01:42		01:57	02:12		02:27	02:42		02:57	03:12		03:27	03:42		03:57	04:12		04:27	04:42	04:55	05:05	05:15	05:25	05:35
BGB	00:59		01:15	01:29	01:44		01:59	02:14		02:29	02:44		02:59	03:14		03:29	03:44		03:59	04:14		04:29	04:45	04:55	05:05	05:15	05:25	05:35
BOK o	01:13		01:30	01:43	01:58		02:13	02:28		02:43	02:58		03:13	03:28		03:43	03:58		04:13	04:28		04:43	05:00	05:10	05:20	05:30	05:40	05:50
BOK	01:15		01:31	01:45	02:00		02:15	02:30		02:45	03:00		03:15	03:30		03:45	04:00		04:15	04:30		04:45	05:01	05:11	05:21	05:31	05:41	05:51
BTP o	01:17		01:32	01:47	02:01		02:17	02:31		02:47	03:01		03:17	03:31		03:47	04:01		04:17	04:31		04:47	05:02	05:12	05:22	05:32	05:42	05:52
BTP	01:22		01:33	01:52	02:02		02:22	02:32		02:52	03:02		03:22	03:32		03:52	04:02		04:22	04:32		04:52	05:03	05:13	05:23	05:33	05:43	05:53
BSKR o	01:34		01:45	02:04	02:14		02:34	02:44		03:04	03:14		03:34	03:44		04:04	04:14		04:34	04:44		05:04	05:15	05:25	05:35	05:45	05:55	05:05
nach	↺		WES	↺	WES		↺	WES		↺	WES		↺	WES		↺	↺		↺	↺		↺	↺	↺	↺	↺	↺	↺

S41 A (Sa/So)

von	↺	↺	↺	↺	↺		↺	↺		↺	↺		HAL	↺		HAL	↺		HAL	↺		HAL	↺	HAL	↺	HAL	↺	↺	↺
BSKR	00:26	00:46	00:56	01:06	01:16		01:35	01:46		02:05	02:15		02:35	02:45		03:05	03:15		03:35	03:45		04:05	04:15	04:35	04:45	05:05	05:15	05:35	05:45
BSGR o	00:27	00:47	00:57	01:07	01:17		01:36	01:47		02:06	02:16		02:36	02:46		03:06	03:16		03:36	03:46		04:06	04:16	04:36	04:46	05:06	05:16	05:36	05:46
BSGR	00:28	00:48	00:58	01:08	01:22		01:37	01:52		02:07	02:22		02:37	02:52		03:07	03:22		03:37	03:52		04:07	04:22	04:37	04:52	05:07	05:22	05:37	05:52
BHAL	00:37	00:57	01:07	01:17	01:31	01:39	01:46	02:01	02:09	02:16	02:31	02:39	02:46	03:01	03:09	03:16	03:31	03:39	03:46	04:01	04:09	04:16	04:31	04:46	05:01	05:16	05:31	05:46	06:01
BWKRR o	00:38	00:58	01:08	01:18	01:32	01:40	01:47	02:02	02:10	02:17	02:32	02:40	02:47	03:02	03:10	03:17	03:32	03:40	03:47	04:02	04:10	04:17	04:32	04:47	05:02	05:17	05:32	05:47	06:02
BWKRR	00:39	00:59	01:11	01:26	01:33	01:41	01:56	02:03	02:11	02:26	02:33	02:41	02:56	03:03	03:11	03:26	03:33	03:41	03:56	04:03	04:11	04:26	04:41	04:56	05:11	05:26	05:41	05:56	06:09
BWES	00:42	01:02	01:15	01:30	01:36	01:45	02:00	02:06	02:15	02:30	02:36	02:45	03:00	03:06	03:15	03:30	03:36	03:45	04:00	04:06	04:15	04:30	04:45	05:00	05:15	05:30	05:45	06:00	06:12
BGB o	00:55	01:15	01:27	01:42		01:57	02:12		02:27	02:42		02:57	03:12		03:27	03:42		03:57	04:12		04:27	04:42	04:57	05:12	05:27	05:42	05:57	06:12	06:25
BGB	00:59	01:15	01:29	01:44		01:59	02:14		02:29	02:44		02:59	03:14		03:29	03:44		03:59	04:14		04:29	04:44	04:59	05:14	05:29	05:44	05:59	06:14	06:25
BOK o	01:13	01:30	01:43	01:58		02:13	02:28		02:43	02:58		03:13	03:28		03:43	03:58		04:13	04:28		04:43	04:58	05:13	05:28	05:43	05:58	06:13	06:28	06:40
BOK	01:15	01:31	01:45	02:00		02:15	02:30		02:45	03:00		03:15	03:30		03:45	04:00		04:15	04:30		04:45	05:00	05:15	05:30	05:45	06:00	06:15	06:30	06:41
BTP o	01:17	01:32	01:47	02:01		02:17	02:31		02:47	03:01		03:17	03:31		03:47	04:01		04:17	04:31		04:47	05:01	05:17	05:31	05:47	06:01	06:17	06:31	06:42
BTP	01:22	01:33	01:52	02:02		02:22	02:32		02:52	03:02		03:22	03:32		03:52	04:02		04:22	04:32		04:52	05:02	05:22	05:32	05:52	06:02	06:22	06:33	06:43
BSKR o	01:34	01:45	02:04	02:14		02:34	02:44		03:04	03:14		03:34	03:44		04:04	04:14		04:34	04:44		05:04	05:14	05:34	05:44	06:04	06:14	06:34	06:45	06:55
nach	↺	WES	↺	WES		↺	WES		↺	WES		↺	WES		↺	↺		↺	↺		↺	↺	↺	↺	↺	↺	↺	↺	↺

S42 R (Fr/Sa)

von	↺	↺	↺	↺	↺	↺		↺	↺		↺	↺		WES	↺		↺	↺		WES	↺	WES		WES		↺	↺						
BSKR	00:20	00:30	00:40	00:50	01:00	01:10		01:24	01:40		01:54	02:10		02:24	02:40		02:54	03:10		03:24	03:40	03:54	04:10	04:24		04:40	04:54						
BTP o	00:33	00:43	00:53	01:03	01:13	01:23		01:39	01:54		02:09	02:24		02:39	02:54		03:09	03:24		03:39	03:54	04:09	04:24	04:39		04:54	05:09						
BTP	00:33	00:43	00:53	01:03	01:13	01:27		01:41	01:57		02:11	02:27		02:41	02:57		03:11	03:27		03:41	03:57	04:11	04:27	04:41		04:57	05:11						
BOK o	00:35	00:45	00:55	01:05	01:15	01:28		01:42	01:58		02:12	02:28		02:42	02:58		03:12	03:28		03:42	03:58	04:12	04:28	04:42		04:58	05:12						
BOK	00:36	00:46	00:56	01:06	01:16	01:32		01:47	02:02		02:17	02:32		02:47	03:02		03:17	03:32		03:47	04:02	04:17	04:32	04:46		05:02	05:16						
BGB o	00:50	01:00	01:10	01:20	01:30	01:46		02:01	02:16		02:31	02:46		03:01	03:16		03:31	03:46		04:01	04:16	04:31	04:46	05:00		05:16	05:30						
BGB	00:51	01:01	01:11	01:21	01:31	01:48		02:02	02:18		02:32	02:48		03:02	03:18		03:32	03:48		04:02	04:18	04:32	04:48	05:01		05:18	05:31						
BWES	01:03	01:13	01:23	01:33	01:43	02:00	02:05	02:15	02:30	02:35	02:45	03:00	03:05	03:15	03:30	03:35	03:45	04:00	04:05	04:15	04:30	04:45	05:00	05:13	05:23	05:30	05:43						
BWKRR o	01:07	01:17	01:27	01:37	01:47	02:03	02:08	02:18	02:33	02:38	02:48	03:03	03:08	03:18	03:33	03:38	03:48	04:03	04:08	04:18	04:33	04:48	05:03	05:17	05:27	05:33	05:47						
BWKRR	01:10	01:25	01:27	01:40	01:55	02:04	02:10	02:25	02:34	02:40	02:55	03:04	03:10	03:25	03:34	03:40	03:55	04:04	04:10	04:25	04:40	04:55	05:07	05:17	05:27	05:37	05:47						
BHAL	01:11	01:26	01:28	01:41	01:56	02:05	02:11	02:26	02:35	02:41	02:56	03:05	03:11	03:26	03:35	03:41	03:56	04:05	04:11	04:26	04:41	04:56	05:09	05:19	05:29	05:39	05:49						
BSGR o	01:20	01:35		01:50	02:05		02:20	02:35		02:50	03:05		03:20	03:35		03:50	04:05		04:20	04:35	04:50	05:05	05:18	05:28	05:38	05:48	05:58						
BSGR	01:21	01:36		01:51	02:06		02:21	02:36		02:51	03:06		03:21	03:36		03:51	04:06		04:21	04:36	04:51	05:06	05:18	05:28	05:38	05:48	05:58						
BSKR o	01:22	01:37		01:52	02:07		02:22	02:37		02:52	03:07		03:22	03:37		03:52	04:07		04:22	04:37	04:52	05:07	05:20	05:30	05:40	05:50	06:00						
nach	↺	HAL			HAL		↺	HAL		↺	HAL		↺	↺		↺	↺		↺	↺	↺	↺	↺	↺	↺	↺	↺						

S42 R (Sa/So)

von	↺	↺	↺	↺	↺	↺		↺	↺		↺	↺		WES	↺		WES	↺		WES	↺	WES	↺	WES	↺	↺	↺	↺	↺	↺		↺	↺
BSKR	00:20	00:30	00:40	00:50	01:00	01:10		01:24	01:40		01:54	02:10		02:24	02:40		02:54	03:10		03:24	03:40	03:54	04:10	04:24	04:40	04:54	05:10	05:24	05:40	05:54		06:10	06:24
BTP o	00:33	00:43	00:53	01:03	01:13	01:23		01:39	01:54		02:09	02:24		02:39	02:54		03:09	03:24		03:39	03:54	04:09	04:24	04:39	04:54	05:09	05:24	05:39	05:54	06:09		06:24	06:39
BTP	00:33	00:43	00:53	01:03	01:13	01:27		01:41	01:57		02:11	02:27		02:41	02:57		03:11	03:27		03:41	03:57	04:11	04:27	04:41	04:57	05:11	05:27	05:41	05:57	06:11		06:27	06:41
BOK o	00:35	00:45	00:55	01:05	01:15	01:28		01:42	01:58		02:12	02:28		02:42	02:58		03:12	03:28		03:42	03:58	04:12	04:28	04:42	04:58	05:12	05:28	05:42	05:58	06:12		06:28	06:42
BOK	00:36	00:46	00:56	01:06	01:16	01:32		01:47	02:02		02:17	02:32		02:47	03:02		03:17	03:32		03:47	04:02	04:17	04:32	04:47	05:02	05:17	05:32	05:47	06:02	06:16		06:32	06:46
BGB o	00:50	01:00	01:10	01:20	01:30	01:46		02:01	02:16		02:31	02:46		03:01	03:16		03:31	03:46		04:01	04:16	04:31	04:46	05:01	05:16	05:31	05:46	06:01	06:16	06:30		06:46	07:00
BGB	00:51	01:01	01:11	01:21	01:31	01:48		02:02	02:18		02:32	02:48		03:02	03:18		03:32	03:48		04:02	04:18	04:32	04:48	05:02	05:18	05:32	05:48	06:02	06:18	06:31		06:48	07:01
BWES	01:03	01:13	01:23	01:33	01:43	02:00	02:05	02:15	02:30	02:35	02:45	03:00	03:05	03:15	03:30	03:35	03:45	04:00	04:05	04:15	04:30	04:45	05:00	05:15	05:30	05:45	06:00	06:15	06:30	06:43	06:53	07:00	07:13
BWKRR o	01:07	01:17	01:27	01:37	01:47	02:03	02:08	02:18	02:33	02:38	02:48	03:03	03:08	03:18	03:33	03:38	03:48	04:03	04:08	04:18	04:33	04:48	05:03	05:18	05:33	05:48	06:03	06:18	06:33	06:47	06:57	07:03	07:17
BWKRR	01:10	01:25	01:27	01:40	01:55	02:04	02:10	02:25	02:34	02:40	02:55	03:04	03:10	03:25	03:34	03:40	03:55	04:04	04:10	04:25	04:40	04:55	05:10	05:25	05:40	05:55	06:10	06:25	06:37	06:47	06:57	07:07	07:17
BHAL	01:11	01:26	01:28	01:41	01:56	02:05	02:11	02:26	02:35	02:41	02:56	03:05	03:11	03:26	03:35	03:41	03:56	04:05	04:11	04:26	04:41	04:56	05:11	05:26	05:41	05:56	06:11	06:26	06:39	06:49	06:59	07:09	07:19
BSGR o	01:20	01:35		01:50	02:05		02:20	02:35		02:50	03:05		03:20	03:35		03:50	04:05		04:20	04:35	04:50	05:05	05:20	05:35	05:50	06:05	06:20	06:35	06:48	06:58	07:08	07:18	07:28
BSGR	01:21	01:36		01:51	02:06		02:21	02:36		02:51	03:06		03:21	03:36		03:51	04:06		04:21	04:36	04:51	05:06	05:21	05:36	05:51	06:06	06:21	06:36	06:48	06:58	07:08	07:18	07:28
BSKR o	01:22	01:37		01:52	02:07		02:22	02:37		02:52	03:07		03:22	03:37		03:52	04:07		04:22	04:37	04:52	05:07	05:22	05:37	05:52	06:07	06:22	06:37	06:50	07:00	07:10	07:20	07:30
nach	↺	HAL		↺	HAL		↺	HAL		↺	HAL		↺	↺		↺	↺		↺	↺	↺	↺	↺	↺	↺	↺	↺	↺	↺	↺	↺	↺	↺

BADL	3/4	3	45	Schönefeld ✈
			46	Königs Wusterhausen
			8	Zeuthen
			85	Grünau
			9	Schönefeld ✈
		4	45	Südkreuz
			46	Westend
			8	Birkenwerder
			85	Pankow
			9	Spandau
BAF	41	41	7	**Ankunft**
			7	**Potsdam Hbf**
	42/44	42	7	**Ankunft**
			7	**Potsdam Hbf**
		44		Regionalverkehr
BAGL	1/2	1	45	Schönefeld ✈
			9	Schönefeld ✈
		2	45	Südkreuz
			9	Spandau
BAHU	A	1		kein Zugverkehr
		2	1	Wannsee
			2	Blankenfelde
			25	Teltow Stadt
			26	Teltow Stadt
	B	3	1	Oranienburg
		4	2	Bernau
			25	Hennigsdorf
			26	Waidmannslust
BALX	B	3	3	Erkner
			5	Strausberg Nord
			7	Ahrensfelde
			9	Schönefeld ✈
		4	3	Spandau
			5	Westkreuz
			7	Potsdam Hbf
			9	Spandau
BARF	1	1	25	Teltow Stadt
			25	Hennigsdorf
BATS	1/2	1	2	Blankenfelde
		2	2	Bernau
BBAB	1/2	1	7	Potsdam Hbf
		2	7	Ahrensfelde
BBCH	1/2	1	2	Blankenfelde
		2	2	Bernau
BBDF	1	1	5	Westkreuz
	2	2	5	Strausberg Nord
BBER	1/2	2	2	**Ankunft**
			2	**Blankenfelde**
BBEU	1/2	1	41	Ring ↻
			46	Gesundbrunnen
		2	42	Ring ↻
			46	Königs Wusterhausen
BBEV	3/4	3	3	Erkner
			5	Strausberg Nord
			7	Ahrensfelde
			9	Schönefeld ✈
		4	3	Spandau
			5	Westkreuz
			7	Potsdam Hbf
			9	Spandau
BBFD	3	3	2	**Ankunft**
			2	**Bernau**
BBFE	1/2	1	8	Zeuthen
		2	8	Birkenwerder
BBGT	1/2	1	1	Wannsee
		2	1	Oranienburg
BBIS	1/2	1	5	Westkreuz
		2	5	Strausberg Nord
BBIW	4/6	4	1	Oranienburg
			8	**Ankunft**
		6	1	Wannsee
			8	**Zeuthen**
BBLB	1/4	1	2	Blankenfelde
			8	Zeuthen
			8	**Zeuthen**
		4	2	Bernau
			8	Birkenwerder
			8	**Ankunft**
BBMW	A	3	8	Zeuthen
			85	Grünau
			9	Schönefeld ✈
		5	45	Schönefeld ✈
			46	Königs Wusterhausen
			47	Spindlersfeld
	B	4	45	Südkreuz
			46	Westend
			47	Hermannstraße
			8	Birkenwerder
			85	Pankow
			9	Spandau
BBOR	1/2	1	1	Oranienburg
		2	1	Wannsee

BBOS	A	1	1	Wannsee
			25	Teltow Stadt
			26	Teltow Stadt
		2	2	Blankenfelde
			8	Zeuthen
			85	Grünau
	B	3	2	Bernau
			8	Birkenwerder
			85	Pankow
		4	1	Oranienburg
			25	Hennigsdorf
			26	Waidmannslust
BBRF	1	1	2	Bernau
			2	Blankenfelde
BBU	1/2	1	2	Blankenfelde
			2	**Lichtenrade**
		2	2	**Ankunft**
			2	Bernau
BBUP	1/2	1	41	Ring ↻
			46	Westend
		2	42	Ring ↻
			46	Königs Wusterhausen
BCHS	C	5	3	Erkner
		6	5	Strausberg Nord
			7	Ahrensfelde
			9	Schönefeld ✈
	D	7	7	Potsdam Hbf
		8	3	Spandau
			5	Westkreuz
			9	Spandau
BE	31/32	31	3	**Ankunft**
			3	**Westkreuz**
		32	3	**Ankunft**
			3	**Westkreuz**
BEBD	2	2	25	Teltow Stadt
			25	Hennigsdorf
BEIW	3/4	3	46	Königs Wusterhausen
			8	Zeuthen
		4	46	Westend
			8	Birkenwerder
BFA	1/2	1	41	Ring ↻
			8	Zeuthen
			85	Grünau
		2	42	Ring ↻
			8	Birkenwerder
			85	Pankow
BFB	1/2	1	1	Wannsee
		2	1	Oranienburg
BFD	15/16	15	5	Strausberg Nord
		16	5	Westkreuz
BFFO	1/2	1	5	Strausberg Nord
			7	Ahrensfelde
			75	Wartenberg
		2	5	Westkreuz
			7	Potsdam Hbf
			75	Ostbahnhof
BFLH ✈	A	11	45	**Ankunft**
			45	**Südkreuz**
		13	9	**Ankunft**
			9	**Spandau**
BFOH	1/2	1	1	**Ankunft**
			1	Oranienburg
		2	1	Wannsee
			1	**Wannsee**
BFRH	1/2	1	3	Spandau
			3	**Spandau**
		2	3	**Ankunft**
			3	Erkner
BFRU	1/2	1	1	Wannsee
		2	1	Oranienburg
BFST	C	5	3	Erkner
			5	Strausberg Nord
			7	Ahrensfelde
			9	Schönefeld ✈
		6	3	Spandau
			5	Westkreuz
			7	Potsdam Hbf
			9	Spandau
BFSTT	D	11	1	Wannsee
			2	Blankenfelde
			25	Teltow Stadt
			26	Teltow Stadt
		12	1	Oranienburg
			2	Bernau
			25	Hennigsdorf
			26	Waidmannslust

BGAS	A	1	46	Königs Wusterhausen
			8	Zeuthen
		2	8	**Ankunft**
			85	**Ankunft**
	B	3	8	**Birkenwerder**
			85	**Pankow**
		4	46	Westend
			8	Birkenwerder
BGB	A	1	1	Wannsee
			2	Blankenfelde
			25	Teltow Stadt
			26	Teltow Stadt
		2	42	Ring ↻
			46	**Königs Wusterhausen**
	B	3	41	Ring ↻
			46	**Ankunft**
		4	1	Oranienburg
			2	Bernau
			25	Hennigsdorf
			26	Waidmannslust
BGBA	1/2	1	45	Schönefeld ✈
			9	Schönefeld ✈
		2	45	Südkreuz
			9	Spandau
BGGS	1/2	1	1	Wannsee
		2	1	Oranienburg
BGRI	1/2	1	7	Potsdam Hbf
		2	7	Ahrensfelde
BGSE	51/52	51	75	Wartenberg
		52	75	Ostbahnhof
BGSS	1/2	1	41	Ring ↻
			8	Zeuthen
			85	Grünau
		2	42	Ring ↻
			8	Birkenwerder
			85	Pankow
BGWD	A	1	7	Potsdam Hbf
		2	3	**Ankunft**
			5	**Ankunft**
			7	**Ankunft**
	B	3	3	**Erkner**
			5	**Mahlsdorf**
			7	**Ahrensfelde**
		4	7	Ahrensfelde
BHAL	1/2	1	41	Ring ↻
			46	Westend
		2	42	Ring ↻
			46	Königs Wusterhausen
BHBF	15/16	15	3	Erkner
			5	Strausberg Nord
			7	Ahrensfelde
			9	Schönefeld ✈
		16	3	Spandau
			5	Westkreuz
			7	Potsdam Hbf
			9	Spandau
BHD	A	1	25	**Ankunft**
			25	**Teltow Stadt**
				Regionalverkehr
		5	25	**Ankunft**
			25	**Teltow Stadt**
				Regionalverkehr
BHED	1/2	1	1	Oranienburg
		2	1	Wannsee
BHEI	1/2	1	41	Ring ↻
			46	Westend
		2	42	Ring ↻
			46	Königs Wusterhausen
BHER	1/2	1	41	Ring ↻
			45	Südkreuz
			46	Westend
			47	**Ankunft**
		2	42	Ring ↻
			45	Schönefeld ✈
			46	Königs Wusterhausen
			47	**Spindlersfeld**
BHGM	1	1	5	Strausberg Nord
			5	Westkreuz
BHH	1/2	1	75	Wartenberg
		2	75	Ostbahnhof
BHI	1/2	1	3	Westkreuz
		2	3	Erkner
BHKM	3/4	3	3	Erkner
			5	Strausberg Nord
			7	Ahrensfelde
			9	Schönefeld ✈
		4	3	Spandau
			5	Westkreuz
			7	Potsdam Hbf
			9	Spandau

BHLS	1/2	1	25	Hennigsdorf
		2	25	Teltow Stadt
BHN	3/4	3	1	Oranienburg
			8	Birkenwerder
		4	1	Wannsee
			8	Zeuthen
BHO	1/2	1	41	Ring ↻
			46	Westend
		2	42	Ring ↻
			46	Königs Wusterhausen
BHPG	4/5	4	5	**Ankunft**
			5	**Westkreuz**
			5	Strausberg Nord
			5	Westkreuz
		5		kein Zugverkehr
BHST	1/2	1	3	Erkner
			9	Schönefeld ✈
		2	3	Spandau
			9	Spandau
BHUM	1/2	1	1	Wannsee
			2	Blankenfelde
			25	Teltow Stadt
			26	Teltow Stadt
		2	1	Oranienburg
			2	Bernau
			25	Hennigsdorf
			26	Waidmannslust
BIP	1/2	1	41	Ring ↻
			46	Westend
		2	42	Ring ↻
			46	Königs Wusterhausen
BJB	3/4	3	3	Erkner
			5	Strausberg Nord
			7	Ahrensfelde
			9	Schönefeld ✈
		4	3	Spandau
			5	Westkreuz
			7	Potsdam Hbf
			9	Spandau
BJLB	1	1	1	Wannsee
		2	1	Oranienburg
BJUN	B	5	41	Ring ↻
			46	Gesundbrunnen
		6	42	Ring ↻
			46	Königs Wusterhausen
BKAD	1/2	1	5	Westkreuz
		2	5	Strausberg Nord
BKBO	2	2	25	Teltow Stadt
			25	Hennigsdorf
BKHD	1/2	1	45	Südkreuz
			46	Westend
			47	Hermannstraße
		2	45	Schönefeld ✈
			46	Königs Wusterhausen
			47	Spindlersfeld
BKLH	11/12	11	3	Spandau
		12	3	Erkner
BKPK	1/2	1	3	Spandau
		2	3	Erkner
BKRW	3/4	3	2	Bernau
				Regionalverkehr
		4	2	Blankenfelde
BKW	B	2	46	**Ankunft**
			46	**Westend**
		3		Regionalverkehr
BLAK	2	2	25	Teltow Stadt
			26	Teltow Stadt
			25	Hennigsdorf
			26	Waidmannslust
BLEN	1/2	1	1	Oranienburg
		2	1	Wannsee
BLI	1/2	1	5	Strausberg Nord
			7	Ahrensfelde
			75	Wartenberg
		2	5	Westkreuz
			7	Potsdam Hbf
			75	Ostbahnhof
BLIO	1/2	1	25	Teltow Stadt
			26	Teltow Stadt
		2	25	Hennigsdorf
			26	Waidmannslust
BLIS	1/2	1	25	Teltow Stadt
			26	Teltow Stadt
		2	25	Hennigsdorf
			26	Waidmannslust

BLRD	1/2	1	2	Blankenfelde
			2	Bernau
		2	2	**Ankunft**
			2	**Buch**
BLST	1/2	1	41	Ring ↻
			8	Zeuthen
			85	Grünau
		2	42	Ring ↻
			8	Birkenwerder
			85	Pankow
BLWE	1/2	1	1	Wannsee
		2	1	Oranienburg
BMAH	2/3	2	2	Bernau
		3	2	Blankenfelde
BMAZ	1/2	1	7	Ahrensfelde
		2	7	Potsdam Hbf
BMDF	1/2	1	5	**Ankunft**
			5	**Westkreuz**
			5	**Warschauer Str.**
		2	5	Westkreuz
	3/4	3	5	Strausberg Nord
		4	5	**Ankunft**
			5	**Strausberg Nord**
BMEA	1/2	1	7	Ahrensfelde
		2	7	Potsdam Hbf
BMEX	1/2	1	1	Wannsee
		2	1	Oranienburg
BMF	1/2	1	2	Blankenfelde
		2	2	Bernau
BMM	6	6	8	Birkenwerder
			8	Zeuthen
BMN	1/2	1	41	Ring ↻
			46	Westend
		2	42	Ring ↻
			46	Königs Wusterhausen
BMS	1/2	1	3	Erkner
			9	Schönefeld ✈
		2	3	Spandau
			9	Spandau
BNB	A	1	1	Wannsee
			2	Blankenfelde
			25	Teltow Stadt
			26	Teltow Stadt
		2	25	**Teltow Stadt**
	B	3	25	**Ankunft**
		4	1	Oranienburg
			2	Bernau
			25	Hennigsdorf
			26	Waidmannslust
BNIS	3/4	3	7	Potsdam Hbf
		4	7	Ahrensfelde
BNIW	1/2	1	1	Wannsee
		2	1	Oranienburg
BNG	1	1	5	Strausberg Nord
			5	Westkreuz
BNK	1/2	1	41	Ring ↻
			45	Südkreuz
			46	Westend
			47	Hermannstraße
		2	42	Ring ↻
			45	Schönefeld ✈
			46	Königs Wusterhausen
			47	Spindlersfeld
BNPL	1/2	1	5	Strausberg Nord
			7	Ahrensfelde
			75	Wartenberg
		2	5	Westkreuz
			7	Potsdam Hbf
			75	Ostbahnhof
BOK	F	11	41	Ring ↻
			8	Zeuthen
			85	Grünau
		12	42	Ring ↻
			8	Birkenwerder
			85	Pankow
BOKS	D	5	3	Ostbahnhof
			5	Westkreuz
			75	Ostbahnhof
		6	3	Spandau
			5	Westkreuz
			7	Potsdam Hbf
			75	Ostbahnhof
	E	3	3	Erkner
			5	Strausberg Nord
			7	Ahrensfelde
		4	75	Wartenberg

BOLS	A	1	3	Erkner
			9	Schönefeld ✈
		2	3	Spandau
			9	Spandau
	B-E			bei Veranstaltungen
BORB	A	30	1	**Ankunft**
			1	**Wannsee**
		32		kein Zugverkehr
BORS	1/2	1	1	Wannsee
			2	Blankenfelde
			25	Teltow Stadt
			26	Teltow Stadt
		2	1	Oranienburg
			2	Bernau
			25	Hennigsdorf
			26	Waidmannslust
BOSB	D	8	3	Erkner
			5	Strausberg Nord
			7	Ahrensfelde
			9	Schönefeld ✈
		9	3	**Erkner**
			75	**Ankunft**
			75	**Wartenberg**
	E	10	3	**Ankunft**
		11	3	Spandau
			5	Westkreuz
			7	Potsdam Hbf
			9	Spandau
BOSP	1	1	47	Spindlersfeld
			47	Hermannstraße
BOSS	1/2	1	25	Teltow Stadt
			26	Teltow Stadt
		2	25	Hennigsdorf
			26	Waidmannslust
BPDH	C	6	7	**Ankunft**
			7	**Ahrensfelde**
		7	7	**Ankunft**
			7	**Ahrensfelde**
BPEN	1	1	5	Strausberg Nord
			5	Westkreuz
BPHD	1/2	1	2	Blankenfelde
			8	Zeuthen
		2	2	Bernau
			8	Birkenwerder
BPIC	1/2	1	3	Erkner
			9	Schönefeld ✈
		2	3	Spandau
			9	Spandau
BPKW	1/2	1	2	Bernau
			8	Birkenwerder
			85	**Ankunft**
		2	2	Blankenfelde
			8	Zeuthen
			85	**Grünau**
BPLA	1/2	1	41	Ring ↻
			8	Zeuthen
			85	Grünau
		2	42	Ring ↻
			8	Birkenwerder
			85	Pankow
BPOE	1/2	1	7	Ahrensfelde
		2	7	Potsdam Hbf
BPOP	A	11	1	Wannsee
			2	Blankenfelde
			25	Teltow Stadt
			26	Teltow Stadt
		12	1	**Zehlendorf**
			26	**Teltow Stadt**
	B	14	1	Oranienburg
			1	**Ankunft**
			2	Bernau
			25	Hennigsdorf
			26	Waidmannslust
			26	**Ankunft**
BPRS	A	1	2	Blankenfelde
		3	25	Teltow Stadt
			26	Teltow Stadt
	B	2	2	Bernau
		4	25	Hennigsdorf
			26	Waidmannslust
BPWA	3/4	3	8	Zeuthen
			85	Grünau
			9	Schönefeld ✈
		4	8	Birkenwerder
			85	Pankow
			9	Spandau

BRB	1/2	1	3	Spandau
		2	3	Erkner
BRD	1/2	1	3	Spandau
		2	3	Erkner
BRGT	1	1	2	Blankenfelde
			2	Bernau
BRH	1/2	1	3	Spandau
		2	3	Erkner
BRST	1/2	1	1	Wannsee
		2	1	Oranienburg
BRW	1/2	1	7	Ahrensfelde
		2	7	Potsdam Hbf
BSAL	1/2	1	41	Ring ⟳
			8	Zeuthen
			85	Grünau
		2	42	Ring ⟳
			8	Birkenwerder
			85	Pankow
BSAP	3/4	3	3	Erkner
			5	Strausberg Nord
			7	Ahrensfelde
			9	Schönefeld ✈
		4	3	Spandau
			5	Westkreuz
			7	Potsdam Hbf
			9	Spandau
BSC	1/2	1	2	Blankenfelde
		2	2	Bernau
BSCF	3/4	3	45	Schönefeld ✈
			46	Königs Wusterhausen
			8	Zeuthen
			85	Grünau
			9	Schönefeld ✈
		4	45	Südkreuz
			46	Westend
			8	Birkenwerder
			85	Pankow
			9	Spandau
BSLS	1/2	1	1	Wannsee
		2	1	Oranienburg
BSDE	1/2	1	25	Teltow Stadt
			26	Teltow Stadt
		2	25	Hennigsdorf
			26	Waidmannslust
BSDG	1/2	1	1	Wannsee
		2	1	Oranienburg
BSGR	11/12	11	41	Ring ⟳
			46	Westend
		12	42	Ring ⟳
			46	Königs Wusterhausen
BSGV	1/2	1	1	Wannsee
		2	1	Oranienburg
BSKR	11/12	11	41	Ring ⟳
			45	Ankunft
			46	Westend
		12	42	Ring ⟳
			45	Schönefeld ✈
			46	Königs Wusterhausen
BSKV	1/2	1	2	Blankenfelde
			25	Teltow Stadt
			26	Teltow Stadt
		2	2	Bernau
			25	Hennigsdorf
			26	Waidmannslust
BSNF	6/8	6	8	Birkenwerder
		8	8	Zeuthen
BSNH	3/4	3	1	Oranienburg
			25	Hennigsdorf
			26	Waidmannslust
		4	1	Wannsee
			25	Teltow Stadt
			26	Teltow Stadt
BSO	1/2	1	41	Ring ⟳
		2	42	Ring ⟳
BSPA	A	1	3	Ankunft
			3	Erkner
		2	9	Ankunft
			9	Schönefeld ✈
BSPF	1	1	47	Ankunft
			47	Hermannstraße
BSPH	20/21	20	7	Potsdam Hbf
			75	Ostbahnhof
		21	7	Ahrensfelde
			75	Wartenberg
BSRW	1/2	1	3	Spandau
			9	Spandau
		2	3	Erkner
			9	Schönefeld ✈

BSTN	1	1	5	Ankunft
			5	Westkreuz
BSTO	1/2	1	41	Ring ⟳
			8	Zeuthen
			85	Grünau
		2	42	Ring ⟳
			8	Birkenwerder
			85	Pankow
BSTR	1	1	5	Strausberg Nord
			5	Westkreuz
BSTV	8/9	8	5	Strausberg Nord
			5	Westkreuz
		9	5	Ankunft
			5	Westkreuz
BSW	3/4	3	45	Schönefeld ✈
			46	Königs Wusterhausen
			47	Spindlersfeld
			47	Ankunft
			47	Spindlersfeld
			8	Zeuthen
			85	Grünau
			9	Schönefeld ✈
		4		kein Zugverkehr
	5/6	5	85	kein Zugverkehr
		6	45	Südkreuz
			46	Westend
			47	Hermannstraße
			8	Birkenwerder
			85	Pankow
			9	Spandau
BSZF	1	1	25	Teltow Stadt
			25	Hennigsdorf
BTG	1/6	1	25	Hennigsdorf
		6	25	Teltow Stadt
BTGN	3/4	3	3	Erkner
			5	Strausberg Nord
			7	Ahrensfelde
			9	Schönefeld ✈
		4	3	Spandau
			5	Westkreuz
			7	Potsdam Hbf
			9	Spandau
BTHF	1/2	1	41	Ring ⟳
			45	Südkreuz
			46	Westend
		2	42	Ring ⟳
			45	Schönefeld ✈
			46	Königs Wusterhausen
BTLS	1/2	1	26	Ankunft
			26	Waidmannslust
		2	25	Ankunft
			25	Hennigsdorf
BTOR	1/2	1	1	Wannsee
			2	Blankenfelde
			25	Teltow Stadt
			26	Teltow Stadt
		2	1	Oranienburg
			2	Bernau
			25	Hennigsdorf
			26	Waidmannslust
BTP	A	1	41	Ring ⟳
			85	Grünau
		3	8	Zeuthen
			9	Schönefeld ✈
	B	2	42	Ring ⟳
			8	Birkenwerder
		4	85	Pankow
			9	Spandau
BWAB	11/12	11	75	Ankunft
			75	Ostbahnhof
		12	75	Ankunft
			75	Ostbahnhof
BWAI	1/2	1	1	Oranienburg
			26	Ankunft
		2	1	Wannsee
			26	Teltow Stadt
BWED	1/2	1	41	Ring ⟳
			46	Gesundbrunnen
		2	42	Ring ⟳
			46	Königs Wusterhausen

BWES	1/2	1	41	Ring ⟳
			46	Gesundbrunnen
			46	Ankunft
		2	42	Ring ⟳
			46	Königs Wusterhausen
			46	Königs Wusterhausen
BWH		1	41	Ring ⟳
			46	Gesundbrunnen
		2	42	Ring ⟳
			46	Königs Wusterhausen
BWHH	1/2	1	3	Spandau
		2	3	Erkner
BWI	3/4	3	46	Königs Wusterhausen
		4	46	Westend
BWIG	1/2	1	3	Spandau
		2	3	Erkner
BWIN		1	1	Oranienburg
			26	Waidmannslust
		2	1	Wannsee
			26	Teltow Stadt
BWKRR	11/12	11	41	Ring ⟳
			46	Westend
		12	42	Ring ⟳
			46	Königs Wusterhausen
BWKS	A	1	3	Spandau
			7	Potsdam Hbf
			9	Spandau
		2	5	Ankunft
	B	3	5	Strausberg Nord
		4	3	Erkner
			7	Ahrensfelde
			9	Schönefeld ✈
BWM	1/2	1	1	Oranienburg
			26	Waidmannslust
		2	1	Wannsee
			26	Teltow Stadt
BWOK	3/4	3	1	Oranienburg
			25	Hennigsdorf
			26	Waidmannslust
		4	1	Wannsee
			25	Teltow Stadt
			26	Teltow Stadt
BWRS	A	1	3	Erkner
			5	Strausberg Nord
			7	Ahrensfelde
			9	Schönefeld ✈
		2	3	Erkner
			5	Mahlsdorf
			75	Wartenberg
			75	Wartenberg
	B	3	3	Ostbahnhof
			5	Ankunft
			75	Ostbahnhof
			75	Ankunft
		4	3	Spandau
			5	Westkreuz
			7	Potsdam Hbf
			75	Ostbahnhof
			9	Spandau
BWSS	A	1	7	Potsdam Hbf
		2	1	Ankunft
	B	3	1	Oranienburg
		4	7	Ahrensfelde
BWT	11/1	11	5	Westkreuz
		1	U5	Alexanderplatz
	12/2	2	U5	Hönow
		12	5	Strausberg Nord
BYOR	1/2	1	2	Blankenfelde
			25	Teltow Stadt
			26	Teltow Stadt
		2	2	Bernau
			25	Hennigsdorf
			26	Waidmannslust
BZD	1/2	1	1	Wannsee
			1	Ankunft
		2	1	Oranienburg
			1	Potsdamer Platz
BZEP	4/6	4	2	Bernau
		6	2	Blankenfelde
BZOS	5/6	5	3	Erkner
			5	Strausberg Nord
			7	Ahrensfelde
			9	Schönefeld ✈
		6	3	Spandau
			5	Westkreuz
			7	Potsdam Hbf
			9	Spandau
BZTH	3/4	3	46	Königs Wusterhausen
			8	Ankunft
			8	Birkenwerder
		4	46	Westend

Nachtverkehr				
BADL	3/4	3	46	Königs Wusterhausen
			8	Grünau
			9	Schönefeld ✈
		4	46	Südkreuz
			8	Pankow
			9	Spandau
BAF	41/42	41	7	Ankunft
			7	Potsdam Hbf
		42		kein Zugverkehr
BAGL	1/2	1	9	Schönefeld ✈
		2	9	Spandau
BAHU	1/2	1		kein Zugverkehr
		2	1	Wannsee
			2	Blankenfelde
			25	Teltow Stadt
	3/4	3	1	Oranienburg
		4	2	Bernau
			25	Hennigsdorf
BALX	3/4	3	7	Ahrensfelde
			9	Schönefeld ✈
		4	7	Potsdam Hbf
			9	Spandau
BARF	1	1	25	Teltow Stadt
			25	Hennigsdorf
BATS	1/2	1	2	Blankenfelde
		2	2	Bernau
BBAB	1/2	1	7	Potsdam Hbf
		2	7	Ahrensfelde
BBCH	1/2	1	2	Blankenfelde
		2	2	Bernau
BBDF	1	1	5	Ostbahnhof
	2	2	5	Mahlsdorf
BBER	1/2	2	2	Ankunft
			2	Blankenfelde
BBEU	1/2	1	41	Ring ⟳
		2	42	Ring ⟳
			42	Halensee
BBEV	3/4	3	7	Ahrensfelde
			9	Schönefeld ✈
		4	7	Potsdam Hbf
			9	Spandau
BBFD	3	3	2	Ankunft
			2	Bernau
BBFE	1/2			kein Zugverkehr
BBGT	1/2	1	1	Wannsee
		2	1	Oranienburg
BBIS	1/2	1	5	Mahlsdorf
		2	5	Strausberg Nord
BBIW	4/6	4	1	Oranienburg
		6	1	Wannsee
BBLB	1/4	1	2	Blankenfelde
		4	2	Bernau
BBMW	3/5	3	8	Grünau
			9	Schönefeld ✈
		5	46	Königs Wusterhausen
	4	4	46	Südkreuz
			8	Pankow
			9	Spandau
BBOR	1/2	1	1	Oranienburg
		2	1	Wannsee
BBOS	A	1	1	Wannsee
			25	Teltow Stadt
		2	2	Blankenfelde
			8	Grünau
	B	3	2	Bernau
			8	Pankow
		4	1	Oranienburg
			25	Hennigsdorf
BBRF	1	1	2	Bernau
			2	Blankenfelde
BBU	1/2	1	2	Blankenfelde
		2	2	Bernau
BBUP	1/2	1	41	Ring ⟳
			41	Westend
		2	42	Ring ⟳

BCHS	5/6	5		kein Zugverkehr
		6	7	Ahrensfelde
			9	Schönefeld ✈
	7/8	7		kein Zugverkehr
		8	7	Potsdam Hbf
			9	Spandau
BE	31/32	31	3	Ankunft
			3	Ostkreuz
		32		kein Zugverkehr
	34	34		kein Zugverkehr
BEBD	2	2	25	Teltow Stadt
			25	Hennigsdorf
BEIW	3/4	3	46	Königs Wusterhausen
		4	46	Südkreuz
BFA	1/2	1	41	Ring ⟳
			8	Grünau
		2	42	Ring ⟳
			8	Pankow
BFB	1/2	1	1	Wannsee
		2	1	Oranienburg
BFD	15/16	15	5	Strausberg Nord
		16	5	Mahlsdorf
BFFO	1/2	1	5	Mahlsdorf
			7	Ahrensfelde
			75	Wartenberg
		2	5	Ostbahnhof
			7	Potsdam Hbf
			75	Lichtenberg
BFLH ✈	11/13	11		kein Zugverkehr
		13	9	Ankunft
			9	Spandau
BFOH	1/2	1	1	Oranienburg
		2	1	Wannsee
BFRH	1/2	1	3	Ostkreuz
		2	3	Erkner
BFRU	1/2	1	1	Wannsee
		2	1	Oranienburg
BFST	5/6	5	7	Ahrensfelde
			9	Schönefeld ✈
		6	7	Potsdam Hbf
			9	Spandau
BFSTT	11/12	11	1	Wannsee
			2	Blankenfelde
			25	Teltow Stadt
		12	1	Oranienburg
			2	Bernau
			25	Hennigsdorf
BGAS	1/2	1	46	Königs Wusterhausen
		2	8	Ankunft
	3/4	3	8	Pankow
		4	46	Südkreuz
BGB	1/2	1	1	Wannsee
			2	Blankenfelde
			25	Teltow Stadt
		2	42	Ring ⟳
			42	Halensee
	3/4	3	41	Ring ⟳
		4	1	Oranienburg
			2	Bernau
			25	Hennigsdorf
BGBA	1/2	1	9	Schönefeld ✈
		2	9	Spandau
BGGS	1/2	1	1	Wannsee
		2	1	Oranienburg
BGRI	1/2	1	7	Potsdam Hbf
		2	7	Ahrensfelde
BGSE	51/52	51	75	Wartenberg
		52	75	Lichtenberg
BGSS	1/2	1	41	Ring ⟳
			8	Grünau
		2	42	Ring ⟳
			8	Pankow
BGWD	1/2	1	7	Potsdam Hbf
		2		kein Zugverkehr
	3/4	3		kein Zugverkehr
		4	7	Ahrensfelde
BHAL	1/2	1	41	Ring ⟳
			41	Ring ⟳
			41	Westend
		2	42	Ring ⟳
			42	Ankunft

BHBF	15/16	15	7	Ahrensfelde
			9	Schönefeld ✈
		16	7	Potsdam Hbf
			9	Spandau
BHD	1/5	1	25	Ankunft
			25	Teltow Stadt
		5	25	Ankunft
			25	Teltow Stadt
BHED	1/2	1	1	Oranienburg
		2	1	Wannsee
BHEI	1/2	1	41	Ring ⟳
			41	Westend
		2	42	Ring ⟳
BHER	1/2	1	41	Ring ⟳
			41	Westend
			46	Südkreuz
		2	42	Ring ⟳
			46	Königs Wusterhause
BHGM	1	1	5	Strausberg Nord
			5	Mahlsdorf
BHH	1/2	1	75	Wartenberg
		2	75	Lichtenberg
BHI	1/2	1	3	Ostkreuz
		2	3	Erkner
BHKM	3/4	3	7	Ahrensfelde
			9	Schönefelde ✈
		4	7	Potsdam Hbf
			9	Spandau
BHLS	1/2	1	25	Hennigsdorf
		2	25	Teltow Stadt
BHN	3/4	3	1	Oranienburg
		4	1	Wannsee
BHO	1/2	1	41	Ring ⟳
			41	Westend
		2	42	Ring ⟳
BHPG	4/5	4	5	Strausberg Nord
			5	Mahlsdorf
		5		kein Zugverkehr
BHST	1/2	1	9	Schönefeld ✈
		2	9	Spandau
BHUM	1/2	1	1	Wannsee
			2	Blankenfelde
			25	Teltow Stadt
		2	1	Oranienburg
			2	Bernau
			25	Hennigsdorf
BIP	1/2	1	41	Ring ⟳
			41	Westend
		2	42	Ring ⟳
BJB	3/4	3	7	Ahrensfelde
			9	Schönefeld ✈
		4	7	Potsdam Hbf
			9	Spandau
BJLB	1/2	1	1	Wannsee
		2	1	Oranienburg
BJUN	5/6	5	41	Ring ⟳
		6	42	Ring ⟳
			42	Halensee
BKAD	1/2	1	5	Mahlsdorf
		2	5	Strausberg Nord
BKBO	2	2	25	Teltow Stadt
			25	Hennigsdorf
BKHD	1/2	1	46	Südkreuz
		2	46	Königs Wusterhause
BKLH	11/12	11	3	Ostkreuz
		12	3	Erkner
BKPK	1/2	1	3	Ostkreuz
		2	3	Erkner
BKRW	3/4	3	2	Bernau
		4	2	Blankenfelde
BKW	2	2	46	Ankunft
			46	Südkreuz
BLAK	2	2	25	Teltow Stadt
			25	Hennigsdorf
BLEN	1/2	1	1	Oranienburg
		2	1	Wannsee

BLI	1/2	1	5	Mahlsdorf
			7	Ahrensfelde
			75	**Wartenberg**
		2	5	Ostbahnhof
			7	Potsdam Hbf
			75	**Ankunft**
BLIO	1/2	1	25	Teltow Stadt
		2	25	Hennigsdorf
BLIS	1/2	1	25	Teltow Stadt
		2	25	Hennigsdorf
BLRD	1/2	1	2	Blankenfelde
			2	Bernau
		2		kein Zugverkehr
BLST	1/2	1	41	Ring ⟲
			8	Grünau
		2	42	Ring ⟲
			42	Halensee
			8	Pankow
BLWE	1/2	1	1	Wannsee
		2	1	Oranienburg
BMAH	2/3	2	2	Bernau
		3	2	Blankenfelde
BMAZ	1/2	1	7	Ahrensfelde
		2	7	Potsdam Hbf
BMDF	1/2			kein Zugverkehr
	3/4	3	5	**Ankunft**
			5	**Ostbahnhof**
		4	5	**Ankunft**
			5	**Strausberg Nord**
BMEA	1/2	1	7	Ahrensfelde
		2	7	Potsdam Hbf
BMEX	1/2	1	1	Wannsee
		2	1	Oranienburg
BMF	1/2	1	2	Blankenfelde
		2	2	Bernau
BMM	6	6		kein Zugverkehr
BMN	1/2	1	41	Ring ⟲
			41	Westend
		2	42	Ring ⟲
			42	Halensee
BMS	1/2	1	9	Schönefeld ✈
		2	9	Spandau
BNB	1/2	1	1	Wannsee
			2	Blankenfelde
			25	Teltow Stadt
		2		kein Zugverkehr
	3/4	3		kein Zugverkehr
		4	1	Oranienburg
			2	Bernau
			25	Hennigsdorf
BNIS	3/4	3	7	Potsdam Hbf
		4	7	Ahrensfelde
BNIW	1/2	1	1	Wannsee
		2	1	Oranienburg
BNG	1	1	5	Strausberg Nord
			5	Mahlsdorf
BNK	1/2	1	41	Ring ⟲
			41	Westend
			46	Südkreuz
		2	42	Ring ⟲
			46	Königs Wusterhausen
BNPL	1/2	1	5	Mahlsdorf
			7	Ahrensfelde
		2	5	Ostbahnhof
			7	Potsdam Hbf
BOK	F	11	41	Ring ⟲
			41	Westend
			8	Grünau
		12	42	Ring ⟲
			42	Halensee
			8	Pankow
BOKS	D	5	3	Ostbahnhof
			5	Ostbahnhof
		6	7	Potsdam Hbf
	E	3	3	Erkner
			7	Ahrensfelde
		4	5	Mahlsdorf
BOLS	A	1	9	Schönefeld ✈
		2	9	Spandau
BORB	A	30	1	**Ankunft**
			1	**Wannsee**
		32		kein Zugverkehr

BORS	1/2	1	1	Wannsee
			2	Blankenfelde
			25	Teltow Stadt
		2	1	Oranienburg
			2	Bernau
			25	Hennigsdorf
BOSB	D	8	7	Ahrensfelde
			9	Schönefeld ✈
		9	5	**Ankunft**
			5	**Mahlsdorf**
	E	10	3	**Ankunft**
			3	**Erkner**
		11	7	Potsdam Hbf
			9	Spandau
BOSP	1	1	47	Spindlersfeld
			47	Schöneweide
BOSS	1/2	1	25	Teltow Stadt
		2	25	Hennigsdorf
BPDH	C	6	7	**Ankunft**
			7	**Ahrensfelde**
		7		kein Zugverkehr
BPEN	1	1	5	Strausberg Nord
			5	Mahlsdorf
BPHD	1/2	1	2	Blankenfelde
		2	2	Bernau
BPIC	1/2	1	9	Schönefeld ✈
		2	9	Spandau
BPKW	1/2	1	2	Bernau
			8	**Ankunft**
		2	2	Blankenfelde
			8	**Grünau**
BPLA	1/2	1	41	Ring ⟲
			8	Grünau
		2	42	Ring ⟲
			42	Halensee
			8	Pankow
BPOE	1/2	1	7	Ahrensfelde
		2	7	Potsdam Hbf
BPOP	A	11	1	Wannsee
			2	Blankenfelde
			25	Teltow Stadt
		12		kein Zugverkehr
	B	13		kein Zugverkehr
		14	1	Oranienburg
			2	Bernau
			25	Hennigsdorf
BPRS	A	1	2	Blankenfelde
		3	25	Teltow Stadt
	B	2	2	Bernau
		4	25	Hennigsdorf
BPWA	3/4	3	8	Grünau
			9	Schönefeld ✈
		4	8	Pankow
			9	Spandau
BRB	1/2	1	3	Ostkreuz
		2	3	Erkner
BRD	1/2	1	3	Ostkreuz
		2	3	Erkner
BRGT	1	1	2	Blankenfelde
			2	Bernau
BRH	1/2	1	3	Ostkreuz
		2	3	Erkner
BRST	1/2	1	1	Wannsee
		2	1	Oranienburg
BRW	1/2	1	7	Ahrensfelde
		2	7	Potsdam Hbf
BSAL	1/2	1	41	Ring ⟲
			8	Grünau
		2	42	Ring ⟲
			42	Halensee
			8	Pankow
BSAP	3/4	3	7	Ahrensfelde
			9	Schönefeld ✈
		4	7	Potsdam Hbf
			9	Spandau
BSC	1/2	1	2	Blankenfelde
		2	2	Bernau
BSCF	3/4	3	46	Königs Wusterhausen
			8	Grünau
			9	Schönefeld ✈
		4	46	Südkreuz
			8	Pankow
			9	Spandau

BSLS	1/2	1	1	Wannsee
		2	1	Oranienburg
BSDE	1/2	1	25	Teltow Stadt
		2	25	Hennigsdorf
BSDG	1/2	1	1	Wannsee
		2	1	Oranienburg
BSGR	11/12	11	41	Ring ⟲
			41	Westend
		12	42	Ring ⟲
BSGV	1/2	1	1	Wannsee
		2	1	Oranienburg
BSKR	11/12	11	41	Ring ⟲
			41	Westend
			46	**Ankunft**
		12	42	Ring ⟲
			46	**Königs Wusterhausen**
BSKV	1/2	1	2	Blankenfelde
			25	Teltow Stadt
		2	2	Bernau
			25	Hennigsdorf
BSNF	6/8			kein Zugverkehr
BSNH	3/4	3	1	Oranienburg
			25	Hennigsdorf
		4	1	Wannsee
			25	Teltow Stadt
BSO	1/2	1	41	Ring ⟲
			41	Westend
		2	42	Ring ⟲
BSPA	1/2	1	9	**Ankunft**
			9	**Schönefeld ✈**
		2	9	**Ankunft**
			9	**Schönefeld ✈**
BSPF	1	1	47	**Ankunft**
			47	**Schöneweide**
BSPH	20/21	20	7	Potsdam Hbf
			75	Lichtenberg
		21	7	Ahrensfelde
			75	Wartenberg
BSRW	1/2	1	9	Spandau
		2	9	Schönefeld ✈
BSTN	1	1	5	**Ankunft**
			5	**Mahlsdorf**
BSTO	1/2	1	41	Ring ⟲
			8	Grünau
		2	42	Ring ⟲
			42	Halensee
			8	Pankow
BSTR	1	1	5	Strausberg Nord
			5	Mahlsdorf
BSTV	8/9	8	5	Strausberg Nord
			5	Mahlsdorf
		9		kein Zugverkehr
BSW	3/4	3	46	Königs Wusterhausen
			8	Grünau
			9	Schönefeld ✈
		4		kein Zugverkehr
	5/6	5		kein Zugverkehr
		6	46	Südkreuz
			47	**Ankunft**
			47	**Spindlersfeld**
			8	Pankow
			9	Spandau
BSZF	1	1	25	Teltow Stadt
			25	Hennigsdorf
BTG	1/6	1	25	Hennigsdorf
		6	25	Teltow Stadt
BTGN	3/4	3	7	Ahrensfelde
			9	Schönefeld ✈
		4	7	Potsdam Hbf
			9	Spandau
BTHF	1/2	1	41	Ring ⟲
			41	Westend
			46	Südkreuz
		2	42	Ring ⟲
			46	Königs Wusterhausen
BTLS	1/2	1		kein Zugverkehr
		2	25	**Ankunft**
			25	**Hennigsdorf**

BTOR	1/2	1	1	Wannsee
			2	Blankenfelde
			25	Teltow Stadt
		2	1	Oranienburg
			2	Bernau
			25	Hennigsdorf
BTP	A	1	41	Ring ⟲
			41	Westend
		3	8	Grünau
			9	Schönefeld ✈
	B	2	42	Ring ⟲
			8	Pankow
		4	9	Spandau
BWAB	11/12	11		kein Zugverkehr
		12	75	**Ankunft**
			75	**Lichtenberg**
BWAI	1/2	1	1	Oranienburg
		2	1	Wannsee
BWED	1/2	1	41	Ring ⟲
		2	42	Ring ⟲
			42	Halensee
BWES	1/2	1	41	Ring ⟲
			41	**Ankunft**
		2	42	Ring ⟲
			42	**Ring ⟲**
			42	Halensee
BWH		1	41	Ring ⟲
		2	42	Ring ⟲
			42	Westend
BWHH	1/2	1	3	Ostkreuz
		2	3	Erkner
BWI	3/4	3	46	Königs Wusterhausen
		4	46	Südkreuz
BWIG	1/2	1	3	Ostkreuz
		2	3	Erkner
BWIN		1	1	Oranienburg
		2	1	Wannsee
BWKRR	11/12	11	41	Ring ⟲
			41	Westend
		12	42	Ring ⟲
			42	Halensee
BWKS	A	1	7	Potsdam Hbf
			9	Spandau
		2		kein Zugverkehr
	B	3		kein Zugverkehr
		4	7	Ahrensfelde
			9	Schönefeld ✈
BWM	1/2	1	1	Oranienburg
		2	1	Wannsee
BWOK	3/4	3	1	Oranienburg
			25	Hennigsdorf
		4	1	Wannsee
			25	Teltow Stadt
BWRS	A	1	3	Erkner
			7	Ahrensfelde
			9	Schönefeld ✈
		2	5	Mahlsdorf
	B	3	3	Ostbahnhof
			5	Ostbahnhof
		4	7	Potsdam Hbf
			9	Spandau
BWSS	A	1	7	Potsdam Hbf
		2	1	**Ankunft**
	B	3	1	**Oranienburg**
		4	7	Ahrensfelde
BWT	11/1	11	5	Ostbahnhof
		1	U5	Alexanderplatz
	12/2	2	U5	Hönow
		12	5	Mahlsdorf
BYOR	1/2	1	2	Blankenfelde
			25	Teltow Stadt
		2	2	Bernau
			25	Hennigsdorf
BZD	1/2	1	1	Wannsee
		2	1	Oranienburg
BZEP	4/6	4	2	Bernau
		6	2	Blankenfelde
BZOS	5/6	5	7	Ahrensfelde
			9	Schönefeld ✈
		6	7	Potsdam Hbf
			9	Spandau
BZTH	3/4	3	46	Königs Wusterhausen
		4	46	Südkreuz

A	1/2	1	2	Ruhleben
		2	2	Pankow
Ad	1/2	1	7	Rudow
		2	7	Rathaus Spandau
Afr	1/2	1	6	Alt-Mariendorf
		2	6	Alt-Tegel
Al	1/3	1	5	**Ankunft**
			5	**Hönow**
		3		kein Zugverkehr
	2/4	2	5	**Ankunft**
			5	**Hönow**
		4		kein Zugverkehr
Am	1/2	1	9	Rathaus Steglitz
		2	9	Osloer Straße
Ap	1/2	1	8	Hermannstraße
		2	8	Wittenau
AS	1/2	1	7	Rudow
		2	7	Rathaus Spandau
At	1/2	1	6	Alt-Mariendorf
		2	6	Alt-Tegel
Au	1	1	3	Krumme Lanke
	2	2	3	Warschauer Straße
B	1/2	1	8	Hermannstraße
		2	8	Wittenau
Beo	1	1	9	Rathaus Steglitz
	2	2	9	Osloer Straße
Beu	1/2	1	7	Rudow
		2	7	Rathaus Spandau
Bi	1/2	1	9	Rathaus Steglitz
		2	9	Osloer Straße
Bk	1/2	1	6	Alt-Mariendorf
		2	6	Alt-Tegel
Bl	1/2	1	7	Rudow
		2	7	Rathaus Spandau
Bli	1/2	1	7	Rudow
		2	7	Rathaus Spandau
Bmo	1	1	2	Ruhleben
	2	2	2	Pankow
Bmu	1/2	1	7	Rudow
		2	7	Rathaus Spandau
Bo	1/2	1	8	Hermannstraße
		2	8	Wittenau
Bpo	1/2	1	4	Innsbrucker Platz
		2	4	Nollendorfplatz
Bpu	1/2	1	7	Rudow
		2	7	Rathaus Spandau
Br	1/2	1	7	Rudow
		2	7	Rathaus Spandau
BRT	1/2	1	55	**Ankunft**
			55	**Hauptbahnhof**
		2		kein Zugverkehr
Bs	1	1	2	Ruhleben
	2	2	2	Pankow
Bt	1/2	1	3	Krumme Lanke
		2	3	Warschauer Straße
Bu	1	1	9	Rathaus Steglitz
	2	2	9	Osloer Straße
Bü	1	1	5	Alexanderplatz
	2/3	2	5	Hönow
		3	5	**Alexanderplatz**
BUN	1/2	1	55	Brandenburger Tor
			55	Hauptbahnhof
		2		kein Zugverkehr
C	1/2	1	5	Alexanderplatz
		2	5	Hönow
Dd	1/2	1	3	Krumme Lanke
		2	3	Warschauer Straße
E	1/2	1	5	Alexanderplatz
		2	5	Hönow
EB	1/2	1	2	Ruhleben
		2	2	Pankow
Ei	1/2	1	7	Rudow
		2	7	Rathaus Spandau
F	1/2	1	6	Alt-Mariendorf
		2	6	Alt-Tegel
Ff	1/2	1	5	Alexanderplatz
		2	5	Hönow

Fi	1/2	1	5	Alexanderplatz
		2	5	Hönow
FN	1/2	1	8	Hermannstraße
		2	8	Wittenau
Fpo	1/2	1	3	Krumme Lanke
		2	3	Warschauer Straße
Fpu	1/2	1	7	Rudow
		2	7	Rathaus Spandau
Fr	1/2	1	6	Alt-Mariendorf
		2	6	Alt-Tegel
Ft	1/2	1	5	Alexanderplatz
		2	5	Hönow
Fw	1/2	1	9	Rathaus Steglitz
		2	9	Osloer Straße
Gb	1/2	1	8	Hermannstraße
		2	8	Wittenau
GK	1/2	1	5	Alexanderplatz
		2	5	Hönow
Go	1/2	1	1	Uhlandstraße
			3	Krumme Lanke
		2	1	Warschauer Straße
			3	Warschauer Straße
Gr	1	1	1	Uhlandstraße
			3	Krumme Lanke
	2	2	1	Warschauer Straße
			3	Warschauer Straße
Gs	1/2	1	7	Rudow
		2	7	Rathaus Spandau
Gt	1/2	1	9	Rathaus Steglitz
		2	9	Osloer Straße
Gu	1/2	1	2	Ruhleben
		2	2	Pankow
Gz	1/2	1	7	Rudow
		2	7	Rathaus Spandau
Ha	1/2	1	9	Rathaus Steglitz
		2	9	Osloer Straße
Hb	1/2	1	3	Krumme Lanke
		2	3	Warschauer Straße
HBF	1/2	1	55	**Ankunft**
			55	**Brandenburger Tor**
		2		kein Zugverkehr
Hd	1/2	1	5	Alexanderplatz
		2	5	Hönow
He	1/2	1	8	Hermannstraße
		2	8	Wittenau
Hh	1/2	1	6	Alt-Mariendorf
		2	6	Alt-Tegel
Hl	1/2	1	7	Rudow
		2	7	Rathaus Spandau
HMS	1/2	1	8	**Ankunft**
			8	**Wittenau**
		2	8	**Ankunft**
			8	**Wittenau**
Ho	1	1	1	Uhlandstraße
			3	Krumme Lanke
	2	2	1	Warschauer Straße
			3	Warschauer Straße
Hö	1/2	1	5	**Ankunft**
			5	**Alexanderplatz**
		2	5	**Ankunft**
			5	**Alexanderplatz**
	3	3	5	kein Zugverkehr
Hpo	1/2	1	8	Hermannstraße
		2	8	Wittenau
Hpu	1/2	1	7	Rudow
		2	7	Rathaus Spandau
Hs	1/2	1	7	Rudow
		2	7	Rathaus Spandau
Hu	1/2	1	6	Alt-Mariendorf
		2	6	Alt-Tegel
Hv	1/2	1	2	Ruhleben
		2	2	Pankow
Hz	1/2	1	3	Krumme Lanke
		2	3	Warschauer Straße
Ip	1/2	1	4	**Ankunft**
			4	**Nollendorfplatz**
		2	4	**Ankunft**
			4	**Nollendorfplatz**

Jho	1/3	1	7	Rudow
		3		kein Zugverkehr
Jhu	2/4	2	7	Rathaus Spandau
		4		kein Zugverkehr
JK	1/2	1	7	Rudow
		2	7	Rathaus Spandau
Jn	1/2	1	8	Hermannstraße
		2	8	Wittenau
Jt	1/2	1	7	Rudow
		2	7	Rathaus Spandau
K	1/2	1	3	**Ankunft**
			3	**Warschauer Straße**
		2	3	**Ankunft**
			3	**Warschauer Straße**
Ka	1/2	1	6	Alt-Mariendorf
		2	6	Alt-Tegel
KB	1/2	1	8	Hermannstraße
		2	8	Wittenau
Kbo	1/2	1	1	Uhlandstraße
			3	Krumme Lanke
		2	1	Warschauer Straße
			3	Warschauer Straße
Kbu	1/2	1	8	Hermannstraße
		2	8	Wittenau
Kd	1	1	2	Ruhleben
	2	2	2	Pankow
Kfo	1	1	1	Uhlandstraße
	2	2	1	Warschauer Straße
Kfu	1/2	1	9	Rathaus Steglitz
		2	9	Osloer Straße
KL	1/2	1	5	Alexanderplatz
		2	5	Hönow
KM	1/2	1	7	Rudow
		2	7	Rathaus Spandau
Kn	1/2	1	7	Rudow
		2	7	Rathaus Spandau
Ko	1/2	1	2	Ruhleben
		2	2	Pankow
Ks	1/2	1	6	Alt-Mariendorf
		2	6	Alt-Tegel
Kt	1/2	1	7	Rudow
		2	7	Rathaus Spandau
Kus	1/2	1	1	Uhlandstraße
			3	Krumme Lanke
		2	1	Warschauer Straße
			3	Warschauer Straße
L	1/2	1	8	Hermannstraße
		2	8	Wittenau
La	1/2	1	7	Rudow
		2	7	Rathaus Spandau
LD	1	1	5	Hermannstraße
	2	2	8	Wittenau
Li	1/2	1	5	Alexanderplatz
		2	5	Hönow
LL	1/2	1	5	Alexanderplatz
		2	5	Hönow
Lpo	1	1	6	Alt-Mariendorf
	2	2	6	Alt-Tegel
Lpu	1/2	1	9	Rathaus Steglitz
		2	9	Osloer Straße
Lu	1/2	1	2	Ruhleben
		2	2	Pankow
MB	1	1	2	Ruhleben
	2	2	2	Pankow
Md	1/2	1	5	Alexanderplatz
		2	5	Hönow
Me	1/3	1	6	Alt-Mariendorf
		3	7	Rudow
	2/4	2	6	Alt-Tegel
		4	7	Rathaus Spandau
Mf	1/2	1	6	**Ankunft**
			6	**Alt-Tegel**
		2	6	**Ankunft**
			6	**Alt-Tegel**
MH	1/2	1	2	Ruhleben
		2	2	Pankow
Mi	1/2	1	2	Ruhleben
		2	2	Pankow
Mic	1/2	1	6	Alt-Mariendorf
		2	6	Alt-Tegel

Mk	1/2	1	2	Ruhleben
		2	2	Pankow
Mo	1	1	1	Uhlandstraße
			3	Krumme Lanke
	2	2	1	Warschauer Straße
			3	Warschauer Straße
Mp	1/2	1	7	Rudow
		2	7	Rathaus Spandau
Mr	1/2	1	8	Hermannstraße
		2	8	Wittenau
Mu	1/2	1	7	Rudow
		2	7	Rathaus Spandau
NA	1/2	1	6	Alt-Mariendorf
		2	6	Alt-Tegel
Nd	1/2	1	2	Ruhleben
		2	2	Pankow
Nk	1/2	1	7	Rudow
		2	7	Rathaus Spandau
Nm	2/4	2	1	Warschauer Straße
			3	Warschauer Straße
			3	**Ankunft**
		4	4	**Ankunft**
			4	**Innsbrucker Platz**
No	1	1	2	Ruhleben
	2	2	2	Pankow
Np	1/2	1	9	Rathaus Steglitz
		2	9	Osloer Straße
Nu	1/3	1	1	Uhlandstraße
			3	Krumme Lanke
		3	3	**Krumme Lanke**
Ob	1/2	1	6	Alt-Mariendorf
		2	6	Alt-Tegel
Obi	1/3	1	2	Ruhleben
		3		kein Zugverkehr
	2/4	2	2	Pankow
		4		kein Zugverkehr
Olo	1/2	1	9	**Rathaus Steglitz**
		2	9	**Ankunft**
Olu	1/2	1	8	Hermannstraße
		2	8	Wittenau
Os	1/2	1	3	Krumme Lanke
		2	3	Warschauer Straße
Ot	1/2	1	3	Krumme Lanke
		2	3	Warschauer Straße
OTl	1/2	1	6	Alt-Mariendorf
		2	6	Alt-Tegel
P	1/2	1	7	Rudow
		2	7	Rathaus Spandau
PA	1/2	1	2	**Ruhleben**
		2	2	**Ankunft**
PB	1/2	1	8	Hermannstraße
		2	8	Wittenau
Pd	1/2	1	2	Ruhleben
		2	2	Pankow
Pi	1/2	1	7	Rudow
		2	7	Rathaus Spandau
Pk	1/2	1	8	Hermannstraße
		2	8	Wittenau
PL	1/2	1	6	Alt-Mariendorf
		2	6	Alt-Tegel
Po	1/2	1	3	Krumme Lanke
		2	3	Warschauer Straße
Pr	1	1	1	Uhlandstraße
			3	Krumme Lanke
	2	2	1	Warschauer Straße
			3	Warschauer Straße
Ps	1/2	1	6	Alt-Mariendorf
		2	6	Alt-Tegel
R	1/2	1	7	**Ankunft**
		2	7	**Rathaus Spandau**
Rb	1/2	1	6	Alt-Mariendorf
		2	6	Alt-Tegel
Rd	1/2	1	3	Krumme Lanke
		2	3	Warschauer Straße
RE	1/2	1	8	Hermannstraße
		2	8	Wittenau
Ri	1/2	1	6	Alt-Mariendorf
		2	6	Alt-Tegel
Rk	1/2	1	7	Rudow
		2	7	Rathaus Spandau

Rl	1/2	1	2	**Ankunft**
			2	**Pankow**
		2	2	**Ankunft**
			2	**Pankow**
Rm	1/2	1	7	Rudow
		2	7	Rathaus Spandau
Ro	1/2	1	8	Hermannstraße
		2	8	Wittenau
RP	1	1	2	Ruhleben
	2	2	2	Pankow
RR	1/2	1	8	Hermannstraße
		2	8	Wittenau
RS	1/2	1	4	Innsbrucker Platz
		2	4	Nollendorfplatz
RSp	1/3	1	7	**Rudow**
		3		kein Zugverkehr
	2/4	2	7	**Ankunft**
		4		kein Zugverkehr
Rw	1/2	1	7	Rudow
		2	7	Rathaus Spandau
Rzu	1/2	1	9	**Ankunft**
		2	9	**Osloer Straße**
S	1	1	1	Uhlandstraße
			3	Krumme Lanke
	2	2	1	Warschauer Straße
			3	Warschauer Straße
Sa	1/2	1	5	Alexanderplatz
		2	5	Hönow
Sch	1/2	1	6	Alt-Mariendorf
		2	6	Alt-Tegel
Scha	1/2	1	6	Alt-Mariendorf
		2	6	Alt-Tegel
Sd	1/3	1	2	Ruhleben
		3	2	**Ankunft**
			2	**Pankow**
	2	2	2	Pankow
Se	1/3	1	6	Alt-Mariendorf
		3	6	**Ankunft**
			6	**Alt-Mariendorf**
	2	2	6	Alt-Tegel
Sh	1/2	1	2	Ruhleben
		2	2	Pankow
Si	1/2	1	5	Alexanderplatz
		2	5	Hönow
Sie	1/2	1	7	Rudow
		2	7	Rathaus Spandau
SK	1/2	1	6	Alt-Mariendorf
		2	6	Alt-Tegel
Slo	2/4	2	9	Osloer Straße
		4		kein Zugverkehr
Slu	1/3	1	9	Rathaus Steglitz
		3		kein Zugverkehr
Sno	1	1	3	Krumme Lanke
	2	2	3	Warschauer Straße
Snu	1/2	1	9	Rathaus Steglitz
		2	9	Osloer Straße
So	1	1	2	Ruhleben
	2	2	2	Pankow
Sp	1/2	1	2	Ruhleben
		2	2	Pankow
Sr	1/2	1	5	Alexanderplatz
		2	5	Hönow
ST	1/2	1	8	Hermannstraße
		2	8	Wittenau
Sü	1/2	1	7	Rudow
		2	7	Rathaus Spandau
Sz	1/2	1	2	Ruhleben
		2	2	Pankow
T	1/2	1	3	Krumme Lanke
		2	3	Warschauer Straße
Tg	1/2	1	6	**Ankunft**
			6	**Alt-Mariendorf**
		2	6	**Ankunft**
			6	**Alt-Mariendorf**
Th	1	1	2	Ruhleben
			2	**Ankunft**
	2	2	2	**Pankow**
			2	Pankow
Tk	1/2	1	5	Alexanderplatz
		2	5	Hönow

Tm	1/2	1	9	Rathaus Steglitz
		2	9	Osloer Straße
Ts	1/2	1	6	Alt-Mariendorf
		2	6	Alt-Tegel
U	1/2	1	1	**Ankunft**
		2	1	**Warschauer Straße**
Ull	1/2	1	6	Alt-Mariendorf
		2	6	Alt-Tegel
V	1/2	1	4	Innsbrucker Platz
		2	4	Nollendorfplatz
VIN	1/2	1	2	Ruhleben
		2	2	Pankow
Vo	1/2	1	8	Hermannstraße
		2	8	Wittenau
W	1/2	1	8	Hermannstraße
		2	8	Wittenau
WA	1/2	1	1	**Ankunft**
			1	**Uhlandstraße**
			3	**Ankunft**
			3	**Krumme Lanke**
		2	1	**Ankunft**
			1	**Uhlandstraße**
			3	**Ankunft**
			3	**Krumme Lanke**
	3	3	1	bei Veranstaltungen
Wd	1/2	1	7	Rudow
		2	7	Rathaus Spandau
We	1/2	1	6	Alt-Mariendorf
		2	6	Alt-Tegel
WF	1/2	1	9	Rathaus Steglitz
		2	9	Osloer Straße
Wh	11/1	11	S5	Westkreuz
		1	5	Alexanderplatz
	12/2	2	5	Hönow
		12	S5	Strausberg Nord
WIU	1/2	1	8	**Hermannstraße**
		2	8	**Ankunft**
Wk	1/2	1	7	Rudow
		2	7	Rathaus Spandau
Wl	1/2	1	6	Alt-Mariendorf
		2	6	Alt-Tegel
WR	1/2	1	5	Alexanderplatz
		2	5	Hönow
Wsg	1/2	1	9	Rathaus Steglitz
		2	9	Osloer Straße
Wt	I	1	1	Uhlandstraße
			3	Krumme Lanke
		3	2	Ruhleben
	II	2	2	Pankow
		4	3	Warschauer Straße
	III	6	1	Warschauer Straße
Y	1/2	1	7	Rudow
		2	7	Rathaus Spandau
Zd	1/2	1	7	Rudow
		2	7	Rathaus Spandau
Zi	1	1	7	Rudow
	2	2	7	Rathaus Spandau
Zo	1	1	2	Ruhleben
	2	2	2	Pankow
Zu	1/2	1	9	Rathaus Steglitz
		2	9	Osloer Straße

Bahnhof	Kürzel DB	Kürzel S	Kürzel U	Tagesverkehr	Nachtverkehr Fr/Sa + Sa/So	Nachtverkehr sonstige
Adenauerplatz			Ad	U7 M19 M29 X10 109 110 310	U7 M19 M29 N10	N7 M19 M29 N10
Adlershof		BADL		S45 S46 S8 S85 S9 61 63 162 163 164 260	S46 S8 S9 N60 N65 N68	N60 N65 N68
Afrikanische Straße			Afr	U6 221	U6	N6
Ahrensfelde	BAHR	BAF		RB25 S7 197 390 901	S7 N97	N97
Ahrensfelde Friedhof	BAFR			RB25 390 901		
Ahrensfelde Nord	BAFN			RB25		
Albrechtshof	BAS			RB10 RB14 237		
Alexanderplatz	BALE	BALX	A, Al, Ap	RE1 RE2 RE7 RB14 S8 S5 S7 S9 U2 U5 U8 M2 M4 M5 M6 100 200 245 248 300	S7 S9 U2 U5 U8 M2 M4 M5 N42 N65	N5 M2 M4 M5 N42 N65
Altstadt Spandau			AS	U7 X33	U7	N7
Alt-Mariendorf			Mf	U6 M76 M77 X76 179 181 277	U6 M76 M77 N79	N6 M76 M77 N79
Alt-Reinickendorf		BARF	⇒ PB	S25 ⇒ U8 120 122 320 322	S25 ⇒ U8 N20	⇒ N8 N20
Alt-Tegel		⇒ BTG	Tg	U6 124 125 133 220 222 ⇒ S25	U6 N22 N24 N25 N33 ⇒ S25	N6 N22 N24 N25 N33
Alt-Tempelhof			At	U6 M46 140 184 246	U6 M46 N84	N6 M46 N84
Altglienicke		BAGL		S45 S9 160 ⇒ 363	S9	
Amrumer Straße			Am	U9 142 221	U9	N9
Anhalter Bahnhof		BAHU		S1 S2 S25 S26 M29 M41	S1 S2 S25 M29 M41	M29 M41
Attilastraße		BATS ⇒ BSDE		S2 184 282 ⇒ S25 S26	S2 N84 ⇒ S25	N84
Augsburger Straße			Au	U3	U3	
Babelsberg		BBAB		S7 94 99 601 602 616 619 690 693 694 715 750	S7 N13 N14 N17	N13 N14 N17
Bad Saarow	BBSP			RB38 430 431		
Bad Saarow Klinikum	BBSK			RB38 ⇒ 430 431		
Basdorf	BBAS			RB27 ⇒ 891		
Baumschulenweg		BBMW		S45 S46 S47 S8 S85 S9 170 265 365	S46 S8 S9 N70	N70
Bayerischer Platz			Bpo, Bpu	U4 U7 ⇒ M46	U7 ⇒ M46	N7 ⇒ M46
Beelitz-Heilstätten	BBEL			RE7 645		
Beelitz Stadt	BBZS			RB88 ⇒ X43 642 643 644 645 647		
Bellevue		BBEV		S3 S5 S7 S9	S7 S9	
Bergfelde		BBFE		S8 809		
Berliner Straße			Beo, Beu	U7 U9 104	U7 U9 N42	N7 N9 N42
Bernau	BBRN	BBER		RB3 RB24 S2 868 869 870 890 891 892 894 895 896 897 898 899 901 907 908 909	S2	
Bernau-Friedenstal		BBRF		S2 ⇒ 868 891 901	S2	
Bernauer Straße			B	U8 M10 247	U8 M10	N8 M10
Bestensee	BBST			RB24 724 726		
Betriebsbahnhof Rummelsburg		BRB		S3 ⇒ 194	S3	
Betriebsbahnhof Schöneweide		BSCF		S45 S46 S8 S85 S9	S46 S8 S9	
Beusselstraße		BBEU		S41 S42 S46 TXL 106 123	S41 S42 N26	N26
Biesdorf		BBDF		S5 192	S5	
Biesdorf-Süd			Bü	U5	U5	
Biesenthal	WBT			RB24 907 909 913		
Birkengrund	BBGN			RE4 701 710 720		
Birkenstein		BBIS		S5 941	S5	
Birkenstraße			Bi	U9 ⇒ M27	U9 ⇒ M27	N9 ⇒ M27
Birkenwerder	BBI	BBIW		RB20 S1 S8	S1	
Bismarckstraße			Bmo, Bmu	U2 U7 ⇒ 109	U2 U7	N2 N7
Blankenburg		BBLB		S2 S8 150 154	S2	
Blankenfelde	BBF	BBFD		RE3 RE7 S2 704 713 720 792 793 794 797	S2	
Blaschkoallee			Bl	U7 170 ⇒ 171	U7	⇒ N7
Blissestraße			Bli	U7 101 104 249 310	U7 N42	N7 N42
Blumberg	BBLU			RB25 895 899 901		
Blumberg-Rehhahn	BAHH			RB25		
Boddinstraße			Bo	U8 104 166	U8	N8
Borgsdorf		BBOR		S1 816	S1	
Bornholmer Straße		BBOS		S1 S2 S25 S26 S8 S85 M13 50	S1 S2 S25 S8 M13	M13
Borsigwerke			Bk	U6 133	U6	N6
Botanischer Garten		BBGT		S1 188 ⇒ M48	S1 N88 ⇒ M48	N88 ⇒ M48
Brandenburger Tor		BTOR	BRT	S1 S2 S25 S26 U55 100 245 ⇒ 300	S1 S2 S25	
Breitenbachplatz			Bt	U3 101 248 282	U3	N3
Brieselang	BBRI			RB10 RB14 649 656 657 667		
Britz-Süd			Br	U7 M46 181	U7 M46	M46 ⇒ N7
Buch		BBU		S2 150 158 259 353 893	S2 N58	N58
Buckower Chaussee		BBCH		S2 M11 X11 277 710 711	S2 M11	M11
Bülowstraße			Bs ⇒ Kus	U2 M19 M48 M85 106 187 ⇒ U1 U3	U2 M19 M48 ⇒ U1	N1 N2 M19 M48
Bundesplatz		BBUP	Bu	S41 S42 S46 U9 248	S41 S42 U9	N9
Bundestag			BUN	U55 ⇒ 100		
Caputh-Geltow	BCAP			RB23		
Caputh Schwielowsee	BSIS			RB23 607		
Charlottenburg	BCHB	BCHS	⇒ Wd	RE1 RE7 RB14 RB21 RB22 S3 S5 S7 S9 X49 109 309 310 ⇒ U7 M49 X34	S7 S9 ⇒ U7 M49	N7 ⇒ M49
Charlottenhof	BPDC			RE1 RB20 RB21 RB22 RE23 91 94 98 X5 580 605 606 610 631	631 N14	N14
Cottbusser Platz			C	U5 195	U5	N5
Dabendorf	BDAB			RE3 RE7 716 789 791 ⇒ 701 714		
Dahlem-Dorf			Dd	U3 M11 X83 ⇒ 110	U3 M11 ⇒ N10	N3 M11 ⇒ N10
Dahlewitz	BDT			RE5 RE7 713 792		
Dallgow-Döberitz	BDL			RE4 RB13 653 655 663 670		
Deutsche Oper			Obi	U2 ⇒ 101	U2	N2
Eberswalde Hbf	WE			RE3 RE66 RB24 861 862 863 883 913 916 918 919 921		
Eberswalder Straße			EB	U2 M1 M10 12	U2 M1 M10	N2 M1 M10
Eichborndamm		BEBD		S25 221 322	S25	
Eichwalde		BEIW		S46 S8 731 738	S46	
Eisenacher Straße			Ei	U7 ⇒ M46	U7 ⇒ M46	N7 ⇒ M46
Elstal	BETN			RE4 RB13 662 668		
Elsterwerdaer Platz			E	U5 X69 108 154 169 190 398	U5 N69	N69
Erkner	BERK	BE		RE1 S8 161 418 420 424 428 429 436 950	S8	
Ernst-Reuter-Platz			RP	U2 M45 X9 245	U2 M45	N2 M45
Falkensee	BFKS			RE2 RE6 RB10 RB14 337 604 651 652 653 654 655 656		

Bahnhof	Kürzel DB	Kürzel S	Kürzel U	Tagesverkehr	Nachtverkehr Fr/Sa + Sa/So	Nachtverkehr sonstige
Fangschleuse	BFS			RE1 429 436		
Fehrbelliner Platz			Fpo, Fpu	U3 U7 101 104 115	U3 U7 N42	N3 N7 N42
Ferch-Lienewitz	BFLZ			RB28		
Feuerbachstraße		BFB		S1 M76 X76 181	S1 M76 N81	M76 N81
Finkenkrug	BFIN			RB10 RB14 653 656		
Flughafen Schönefeld ✈	BFHS	BFLH		RE7 RB14 RB22 S45 S9 163 164 171 734 735 736 738 741 742	S9 N7 N60	N7 N60
Frankfurter Allee		BFA	Ff	S41 S42 S8 S85 U5 M13 16	S41 S42 S8 U5 M13	N5 M13
Frankfurter Tor			Ft	U5 M10 21	U5 M10	N5 M10
Franz-Neumann-Platz (Am Schäfersee)			FN	U8 128 250 327	U8	N8
Französische Straße			Fr	U6 147	U6	
Fredersdorf		BFD		S5 933 948 949 951	S5	
Freie Universität (Thielplatz)			T	U3 110	U3	N3
Friedenau		BFRU		S1 187	S1	
Friedersdorf	BFDF			RB36 722 723		
Friedrichsfelde			Fi	U5 194 296 396	U5 N50	N50
Friedrichsfelde Ost		BFFO		S5 S7 S75 M17 27 37 192 194	S5 S7 S75 M17	M17
Friedrichshagen		BFRH		S8 60 61 88	S8 N61 N67	N61 N67
Friedrichstraße	BFRI	BFST, BFSTT	F	RE1 RE2 RE7 RB14 RB21 RB22 S1 S2 S25 S26 S8 S5 S7 S9 U6 M1 12 147	S1 S2 S25 U6 S7 S9 M1	N6 M1
Friedrich-Wilhelm-Platz			Fw	U9 M76 181 186 246	U9 N81	N9 N81
Frohnau		BFOH		S1 125 220	S1 N20	N20
Fürstenwalde	BFUW			RE1 RB36 403 411 412 413 414 430 431 432 433 434 435 436		
Fürstenwalde Süd	BFUS			RB36 403 411 413 431 435		
Gartenfeld [außer Betrieb]		BGTF		⇒ X33 133	⇒ N33	⇒ N33
Gehrenseestraße		BGSE		S75 294	S75 N56	N56
Gesundbrunnen	BGS	BGB	Gb	DB RB3 RB5 RB6 S1 S2 S25 S26 S41 S42 S46 U8 247	S1 S2 S25 S41 S42 U8	N8
Gleisdreieck			Go, Gu	U1 U2 U3	U1 U2	
Gneisenaustraße			Gs	U7 140 248	U7	N7
Görlitzer Bahnhof			Gr	U1 U3 M29	U1 M29	N1 M29
Greifswalder Straße		BGSS		S41 S42 S8 S85 M4	S41 S42 S8 M4	M4
Grenzallee			Gz	U7 171	U7	N7
Griebnitzsee	BGBS	BGRI		RB21 RB22 S7 616 694 696	S7 N17	N17
Großbeeren	BGSB			RE4 703 710 711		
Großgörschenstraße		BGGS ⇒ BYOR ⇒ Y		S1 M19 ⇒ S2 S25 S26 U7	S1 M19 ⇒ S2 S25 U7	N7 M19
Groß Köris	BTPI			RB24 477 726 727		
Groß Schönebeck	BGSK			RB27 904 905		
Grünau		BGAS		S46 S8 S85 68 163 263 363	S46 S8 N62 N68	N62 N68
Grünbergallee		BGBA		S45 S9 ⇒ 160 163	S9	
Grüneberg	WGRG			RB12 832		
Grunewald		BGWD		S7 M19 186 349	S7	
Güntzelstraße			Gt	U9	U9	N9
Hackescher Markt		BHKM		S3 S5 S7 S9 M1 M4 M5 M6	S7 S9 M1 M4 M5 N40 N42 N65	N2 N5 N8 N40 N42 N65
Halemweg			Hl	U7 123	U7	⇒ N7
Halensee		BHAL		S41 S42 S46 M19 M29 X10 104	S41 S42 M19 M29 N42	M19 M29 N42
Hallesches Tor			Ho, Hu	U1 U3 U6 M41 248	U1 U6 M41 N42	N1 N42 ⇒ N6
Hangelsberg	BHGB			RE1 436		
Hansaplatz			Ha	U9 106	U9 N26	N26 ⇒ N9
Haselhorst			Hs	U7 X33 X36 133 236	U7 N33	N7 N33
Hauptbahnhof	BLS, BL	BHBF	HBF	DB RE1 RE2 RB3 RB4 RE5 RE7 RB10 RB14 RB21 RB22 S3 S5 S7 S9 U6 M5 M8 M10 M41 M85 TXL 120 123 142 147 245	S7 S9 M10 M41 N20 N40	M10 M41 N20 N40
Hausvogteiplatz			Hv	U2 ⇒ 147 200 265	U2	⇒ N2
Heerstraße		BHST		S3 S9 M49 X34 X49 218 349	S9 M49	M49
Hegermühle		BHGM		S5 ⇒ 89 885 923 926 927 929 931 937 955 966	S5	
Heidelberger Platz		BHEI	Hb	S41 S42 S46 U3 249 310	S41 S42 U3	N3
Heiligensee		BHLS		S25 124	S25 N24	N24
Heinrich-Heine-Straße			He ⇒ Mk	U8 165 265 ⇒ U2 147	U8 N65 ⇒ U2	N8 N65
Hellersdorf			Hd	U5 M6 18 X54 195	U5 M6	N5 M6
Hennigsdorf	BHND	BHD		RE6 RB20 RB55 S25 136 651 807 808 809 811 824 ⇒ 814	S25	
Hermannplatz			Hpo, Hpu	U7 U8 M29 M41 171 194	U7 U8 M29 M41 N94	N7 N8 M29 M41 N94
Hermannstraße		BHER	HMS	S41 S42 S45 S46 S47 U8 M44 246 277 370 377	S41 S42 S46 U8 M44 N79	N8 M44 N79
Hermsdorf		BHED		S1 326 806 809	S1 N25	N25
Herrensee	BHE			RB26		
Hirschgarten		BHI		S3 ⇒ 60	S3 ⇒ N60 N67	⇒ N60 N67
Hohen Neuendorf		BHN		S1 S8 809 822	S1	
Hohen Neuendorf West	BHOW			RB20 ⇒ 822		
Hohenschönhausen	BHSH	BHH		RB12 RB24 S75 M4 M17 X54 154 197 256 893	S75 M4 N56	M4 N56
Hohenzollerndamm		BHO		S41 S42 S46 115	S41 S42 N10	N8 N10
Hohenzollernplatz			Hz	U3 249	U3	N3
Holzhauser Straße			Hh	U6 X33 133	U6 N33	N6 N33
Hönow			Hö	U5 395 941 943	U5	N5
Hoppegarten		BHPN		S5 940 942 943 944 945	S5	
Humboldthain		BHUM		S1 S2 S25 S26 247 ⇒ M27	S1 S2 S25 ⇒ M27	⇒ M27
Innsbrucker Platz (Hauptstraße)		BIP	Ip	S41 S42 S46 U4 M48 M85 187 248	S41 S42 M48	M48
Jakob-Kaiser-Platz			JK	U7 M21 X9 X21 109 123	U7 M21	N7 M21
Jannowitzbrücke		BJB	Jn	S3 S5 S7 S9 U8 300	S7 S9 U8 N40 N65	N8 N40 N65
Johannisthaler Chaussee (Gropiusstadt)			Jt	U7 M11 X11 172 744	U7 M11	M11 ⇒ N7
Julius-Leber-Brücke		BJLB		S1 104 106 204 ⇒ M48 M85 187	S1 N42 ⇒ M48	N42 ⇒ M48
Jungfernheide	BJUF	BJUN	Jho, Jhu	RE4 RE6 RB10 RB13 S41 S42 S46 U7 M21 M27 X9 109	S41 S42 U7 M21 M27	N7 M21 M27
Kablow	BKAB			RB36 ⇒ 723		
Kaiserdamm		⇒ BMN	Kd	U2 139 ⇒ S41 S42 S46 M49 X34 X49 218	U2 ⇒ S41 S42 M49	N2 ⇒ M49
Kaiserin-Augusta-Straße			Ka	U6 184	U6	N6
Karl-Bonhoeffer-Nervenklinik		BKBO	KB	S25 U8 M21 X21 ⇒ 322	S25 U8 M21	N8 M21
Karl-Marx-Straße			KM	U7	U7	N7
Karlshorst	BKH	BKLH		S3 M17 27 37 296 396	S3 M17	M17
Karow	BKAR	BKRW		RB27 S2 350	S2	

Bahnhof	Kürzel DB	Kürzel S	Kürzel U	Tagesverkehr	Nachtverkehr Fr/Sa + Sa/So	Nachtverkehr sonstige
Kaulsdorf		BKAD		S5 Bus 197 269 399	S5 Bus N95	Bus N95
Kaulsdorf-Nord			KL	U5 Bus 191 197 269 291	U5 Bus N91	N5 Bus N91
Kienberg (Gärten der Welt)			GK	U5 Bus 197	U5	N5
Klandorf	BKLD			RB27 ⇒ Bus 902 905		
Kleistpark			Kt	U7 M M48 M85 Bus 106 187 204	U7 M M48	N7 M M48
Klosterfelde	BKLF			RB27 Bus 897 902		
Klosterstraße			Ko	U2 ⇒ Bus 300	U2 ⇒ Bus N40 N42	⇒ N8 Bus N40 N42
Kochstraße (Checkpoint Charlie)			Ks	U6 M M29	U6 M M29	N6 M M29
Köllnische Heide		BKHD		S45 S46 S47 M M41 Bus 341 ⇒ Bus 377	S46 M M41 ⇒ Bus N79	M M41 ⇒ Bus N79
Königs Wusterhausen	BKW	BKW		RE2 RB22 RB24 RB36 S46 Bus 721 722 723 724 727 728 729 730 733 735 736 737 739 790 S46		
Konstanzer Straße			Kn	U7 Bus 101	U7	N7
Köpenick		BKPK		S3 Tram 62 63 68 X69 Bus 164 169 269	S3 Bus N69 N90	Bus N69 N90
Kottbusser Tor			Kbo, Kbu	U1 U3 U8 Bus 140	U1 U8	N1 N8
Krumme Lanke		⇒ BMEX	K	U3 X11 Bus 118 622 ⇒ S1	U3 ⇒ S1	N3
Kummersdorf	BKUM			RB36 ⇒ Bus 406		
Kurfürstendamm			Kfo, Kfu	U1 U9 M M19 M29 M46 X10 Bus 109 110 204 249	U1 U9 M M19 M29 M46 Bus N10 N26	N1 N2 N3 N9 M M19 M29 M46 Bus N10 N26
Kurfürstenstraße			Kus ⇒ Bs	U1 U3 M M48 M85 ⇒ U2 M M19	U1 M M48 ⇒ U2 M M19	N1 N2 M M48 ⇒ M M19
Kurt-Schumacher-Platz			Sch	U6 M M21 X21 Bus 122 125 128 221	U6 M M21	N6 M M21
Landsberger Allee		BLST		S41 S42 S8 S85 M M5 M6 M8 Bus 156	S41 S42 S8 M M5 M6 M8	M M5 M6 M8
Lankwitz		BLAK		S25 S26 M M82 X83 Bus 181 187 283 284 ⇒ Bus 184 284	S25 M M82 Bus N81 ⇒ N84	M M82 Bus N81 ⇒ N84
Lehnitz		BLEN		S1	S1	
Leinestraße			L	U8	U8	N8
Leopoldplatz			Lpo, Lpu	U6 U9 Bus 120 142 221 247 327	U6 U9 Bus N20	N6 N9 Bus N20
Lichtenberg	BLO	BLI	Li	DB RB12 RB24 RB25 RB26 S5 S7 S75 U5 Tram 21 37 Bus 108 240 256 296	S5 S7 S75 U5 Bus N50 N94	Bus N50 N94 ⇒ N5
Lichtenrade		BLRD		S2 M M76 Bus 172 175 275	S2 M M76	M M76
Lichterfelde Ost	BLIH	BLIO		RE3 RE4 RE5 S25 S26 M M11 X11 Bus 184 284 ⇒ Bus 380	S25 M M11 Bus N84	M M11 Bus N84
Lichterfelde Süd		BLIS		S25 S26 M M85 Bus 186 284	S25 M M85 Bus N88	M M85 Bus N88
Lichterfelde West		BLWE		S1 M M11 ⇒ M M48 Bus 101 188	S1 M M11 ⇒ M M48 Bus N88	M M11 ⇒ M M48 Bus N88
Lindauer Allee			LD	U8 Bus 322 ⇒ M M21	U8 ⇒ M M21	N8 ⇒ M M21
Lipschitzallee			La	U7 Bus 373 ⇒ M M11 Bus 172	U7 ⇒ M M11	⇒ M M11
Lottschesee	BLOS			RB27		
Louis-Lewin-Straße			LL	U5 Bus 195	U5	N5
Löwenberg (Mark)	WLO			RE3 RB12 Bus 802 830 831 832 857		
Ludwigsfelde	BLF			RE3 RE4 Bus 619 621 701 702 705 708 709 710 714 715 720 750 751		
Ludwigsfelde-Struveshof	BSTH			RB22 Bus 621 702 708		
Magdalenenstraße			Md	U5 Bus 240	U5 Bus N50 N56 N94	N5 Bus N50 N56 N94
Mahlow		BMAH		S2 Bus 600 742 794 797	S2	
Mahlsdorf	BMHL	BMDF		RB26 S5 Tram 62 Bus 195 197 395 398 ⇒ Bus 399	S5 Bus N90 N95	Bus N90 N95
Marienfelde		BMF		S2 M M77 Bus 283 ⇒ Bus 277	S2 M M77 Bus N81	M M77 Bus N81
Märkisches Museum			Mk ⇒ He	U2 Bus 147 165 265 ⇒ U8 Bus 200 248	U2 ⇒ U8 Bus N42 N65	⇒ N2 N8 Bus N42 N65
Marquardt	BMQU			RB20 RB21 ⇒ Bus 609 614 650		
Marzahn		BMAZ		S7 M M6 Tram 16 X54 Bus 191 192 195 291	S7 M M6	M M6
Mehringdamm			Me	U6 U7 M M19 Bus 140	U6 U7 M M19 Bus N42	N6 N7 M M19 Bus N42
Mehrower Allee		BMEA		S7 X69 Bus 197	S7	
Melchow	WMCH			RB24 ⇒ Bus 919		
Mendelssohn-Bartholdy-Park			MB	U2 M M29	U2 M M29	N1 M M29
Messe Nord/ICC		BMN	⇒ Kd	S41 S42 S46 M M49 X34 X49 Bus 139 218 ⇒ U2	S41 S42 M M49 ⇒ U2	M M49 ⇒ N2
Messe Süd		BMS		S3 S9 Bus 349	S9	
Mexikoplatz		BMEX	⇒ K	S1 Bus 118 622 ⇒ U3 X11	S1 ⇒ U3	N3
Michendorf	BMIP			RE7 RB23 RB33 X43 Bus 608 613 643 646	Bus 643	
Mierendorffplatz			Mp	U7 M M27 ⇒ X9	U7 M M27	N7 M M27
Möckernbrücke			Mo, Mu	U1 U3 U7	U1 U7	N1
Mohrenstraße			MH	U2 M M48 Bus 300	U2 M M48	M M48
Moritzplatz			Mr	U8 M M29 ⇒ Bus 140	U8 M M29	N8 M M29
Mühlenbeck-Mönchmühle		BMM		S8 Bus 806 810		
Müncheberg (Mark)	BMB			RB26 Bus 926 928 929 939 955		
Museumsinsel [in Bau]			MIN	Bus 100 245 300		
Nassenheide	WNAS			RB12 Bus 803		
Naturkundemuseum			NA	U6 M M5 M8 M10 Tram 12	U6 M M10 Bus N40	N6 M M10 Bus N40
Nauen	BNAU			RE2 RB10 RB14 Bus 650 658 659 660 661 663 664 666 667 669 680		
Nauener Platz			Np	U9 Bus 247 327	U9	N9
Neu-Westend			Nd	U2 Bus 104 349	U2	N2
Neuenhagen		BNG		S5 Bus 940 949	S5	
Neukölln		BNK	Nk	S41 S42 S45 S46 S47 U7 Bus 171 370 377	S41 S42 S46 U7 Bus N79	N7 Bus N79
Niederlehme	BNDL			RB36 ⇒ Bus 733		
Nikolassee		BNIS, BNIW		S1 S7 Bus 112 312 ⇒ Bus 218	S1 S7 Bus N16 N18	Bus N16 N18
Nöldnerplatz		BNPL ⇒ BRH		S5 S7 S75 Bus 194 240 396 ⇒ S8 Tram 21	S5 S7 Bus N94 ⇒ S8	Bus N94
Nollendorfplatz			Nm, No, Nu	U1 U2 U3 U4 M M19 Bus 106 187	U1 U2 U3 M M19 Bus N26	N1 N2 M M19 Bus N26
Nordbahnhof		BNB		S1 S2 S25 S26 M M8 M10 Tram 12 Bus 247	S1 S2 S25 M M10 Bus N40	M M10 Bus N40
Olympiastadion		BOLS	⇒ Sd	S3 S9 ⇒ U2 M M49 Bus 218	S9 ⇒ U2 M M49	⇒ M49
Olympia-Stadion		⇒ BOLS	Sd	U2 ⇒ S3 S9	U2 ⇒ S9	
Onkel Toms Hütte			Ot	U3 Bus 118	U3	⇒ N3
Oranienburg	BOR	BORB		RE6 RB12 RB20 S1 Bus 800 801 802 803 804 805 821 824	S1	
Oranienburger Straße		BORS		S1 S2 S25 S26 M M1 M5	S1 S2 S25 M M1	M M1
Oranienburger Tor			Ob	U6 M M1 M5 Tram 12 Bus 142	U6 M M1	N6 M M1
Osdorfer Straße		BOSS		S25 S26 Bus 112 186	S25 Bus N88	Bus N88
Oskar-Helene-Heim			Os	U3 X10 Bus 110 115 285 623	U3 Bus N10	N3 Bus N10
Osloer Straße			Olo, Olu	U8 U9 M M13 Tram 50 Bus 125 128 150 255	U8 U9 M M13 Bus N52	N8 N9 M M13 Bus N52
Ostbahnhof	BHF	BOSB		DB RE1 RE7 RB14 S3 S5 S7 S75 S9 Bus 140 142 147 240 300 347	S5 S7 S9 Bus N40	Bus N40
Ostkreuz	BOKN, BOKO, BOKR	BOK, BOKS		RE1 RE2 RE7 RB12 RB14 RB24 RB25 RB26 S3 S41 S42 S5 S7 S75 S8 S85 Bus 194 347	S3 S41 S42 S5 S7 S8 Bus N94	Bus N94
Otisstraße			OTI	U6 ⇒ Bus 125	U6	⇒ N6
Pankow		BPKW	PA	S2 S8 S85 U2 M M1 Tram 50 M M27 X54 Bus 155 250 255	S2 S8 U2 M M1 M M27 Bus N50	N2 M M1 M M27 Bus N50
Pankow-Heinersdorf		BPHD		S2 S8 Tram 50	S2 Bus N50	Bus N50
Pankstraße			Pk	U8 M M27 ⇒ M M13 Tram 50	U8 M M27 ⇒ M M13	N8 M M27 ⇒ M M13

Bahnhof	Kürzel DB	Kürzel S	Kürzel U	Tagesverkehr	Nachtverkehr Fr/Sa + Sa/So	Nachtverkehr sonstige
Paracelsus-Bad		⇒ BARF	PB	U5 Bus 120 122 320 322 ⇒ S25	U5 Bus N20 ⇒ S25	N8 Bus N20
Paradestraße			Ps	U6	U6	N6
Parchimer Allee			Pi	U7 Tram M46 ⇒ Bus 171 181	U7 Tram M46	Tram M46 ⇒ N7
Paulsternstraße			P	U7 Bus 139	U7 Bus N39	N7 Bus N39
Petershagen Nord		BPEN		S5 Bus 931 932 933 948 949	S5	
Pichelsberg		BPIC		S3 S9 ⇒ Tram M49 Bus 218	S9 ⇒ Tram M49	⇒ Tram M49
Plänterwald		BPWA		S3 S5 S9 Bus 165 166 377 ⇒ Bus 265	S3 S9 Bus N65 N79	Bus N65 N79
Platz der Luftbrücke			PL	U6 Bus 104 248	U6 Bus N42	N6 Bus N42
Podbielskiallee			Po	U3 ⇒ Bus 110	U3 ⇒ Bus N10	⇒ Bus N10
Poelchaustraße		BPOE		S7 Bus 291 ⇒ Bus 191	S7	
Potsdam Charlottenhof	BPDC			RE1 RB20 RB21 RB22 RB23 Bahn 91 94 98 Express X5 Bus 580 605 606 610 631	Bus N14	Bus N14
Potsdam Golm	BGOL			RB20 RB21 RB22 Express X5 Bus 605 606 612	Bus N14	Bus N14
Potsdam Hauptbahnhof	BPD	BPDH		RE1 RB20 RB21 RB22 RB23 S7 Bahn 91 92 93 96 98 99 Express X1 X5 X15 Bus 580 601 603 604 605 606 607 608 611 614 619 631 638 643 650 690 691 694 695 715 750	S7 Bus 607 611 631 Bus N13 N14 N15 N16 N17 N43	Bus N13 N14 N16 N17
Potsdam Medienstadt Babelsberg	BDW			RE7 RB33 Bus 601 619 690 696	Bus N13	Bus N13
Potsdam Park Sanssouci	BWP			RE1 RB20 RB21 RB22 Express X5 Bus 605 606 610 695	Bus N14	Bus N14
Potsdam Pirschheide	BPDP			RB23 Bahn 91 94 Bus 695 ⇒ Bus 580 631	Bus 631	
Potsdam Rehbrücke	BRC			RE7 RB33 Bahn 91 93 98 Bus 602 611 693 699 750	Bus N14	Bus N14
Potsdamer Platz	BPOF	BPOP	Pd	RE3 RE4 RE5 RB10 S1 S2 S25 S26 U2 Tram M41 M48 M85 Bus 200 300	S1 S2 S25 U2 Tram M41 M48	N2 Tram M41 M48
Prenzlauer Allee		BPLA		S41 S42 S8 S85 Tram M2 Bus 156	S41 S42 S8 Tram M2	Tram M2
Priesterweg		BPRS		S2 S25 S26 Tram M76 Express X76 Bus 170 246	S2 S25 Tram M76	Tram M76
Prinzenstraße			Pr	U1 U3 Bus 140	U1	N1
Priort	BPOT			RB20 RB21 Bus 662		
Rahnsdorf		BRD		S3 Bahn 87 Bus 161	S3 Bus N61	Bus N61
Rangsdorf	BRSF			RE5 RE7 Bus 713		
Raoul-Wallenberg-Straße		BRW		S7 Express X54 Bus 154	S7	
Rathaus Neukölln			Rk	U7 Bus 104 166 ⇒ Tram M41	U7 Bus N94 ⇒ Tram M41	N7 Bus N94 ⇒ Tram M41
Rathaus Reinickendorf			RR	U8 Express X33 Bus 220 221 322 ⇒ Bus 124	U8 ⇒ Bus N24	N8 ⇒ Bus N24
Rathaus Schöneberg			RS	U4 ⇒ Tram M46 Bus 104	⇒ Tram M46 Bus N42	⇒ Tram M46 Bus N42
Rathaus Spandau	⇒ BSPD	⇒ BSPA	RSp	U7 Tram M32 M37 M45 Express X33 X36 Bus 130 134 135 136 137 236 237 337 638 671 ⇒ DB RE2 RE4 RE6 RB10 RB13 RB14 S3 S9	U7 Tram M32 M37 M45 Bus N30 N34 ⇒ S9	N7 Tram M32 M37 M45 Bus N30 N34
Rathaus Steglitz		BRST	Rzu	S1 U9 Tram M48 M82 M85 Express X83 Bus 170 186 188 282 283 284 285	S1 U9 Tram M48 M82 M85 Bus N88	N9 Tram M48 M82 M85 Bus N88
Rehberge			Rb	U6 ⇒ Bus 120 221	U6 ⇒ Bus N20	N6 ⇒ Bus N20
Rehfelde	BRE			RB26 Bus 934		
Reinickendorfer Straße			Ri	U6 Tram M27 Bus 120	U6 Tram M27 Bus N20	N6 Tram M27 Bus N20
Residenzstraße			RE	U8 Bus 122 125 327	U8	N8
Richard-Wagner-Platz			Rw	U7 Tram M45 Express X9	U7 Tram M45	N7 Tram M45
Rohrdamm			Rm	U7 Bus 123 139	U7 Bus N23 N39	N7 Bus N23 N39
Röntgental		BRGT		S2	S2	
Rosa-Luxemburg-Platz			Lu	U2 Tram M8 Bus 142	U2	N2
Rosenthaler Platz			Ro	U8 Tram M1 M8 Bus 142	U8 Tram M1 Bus N40	N8 Tram M1 Bus N40
Rotes Rathaus [in Bau]			RHO	⇒ Bus 200 248 300	⇒ Bus N40 N42 N65	⇒ N2 N8 Bus N40 N42 N65
Rüdesheimer Platz			Rd	U3 Bus 186 ⇒ Bus 101 248	U3	⇒ N3
Rüdnitz	WRZ			RB24 ⇒ Bus 896 909		
Rudow			R	U7 Express X7 Bus 162 171 172 260 271 371 372 373 744	U7 N7	N7
Ruhleben			Rl	U2 Tram M45 Bus 130 131	U2 Tram M45	N2 Tram M45
Ruhlsdorf-Zerpenschleuse	BRUZ			RB27 Bus 902 905		
Rummelsburg		BRH ⇒ BNPL		S3 Bahn 21 Bus 194 240 ⇒ S5 S7 S75 Bus 396	S3 Bus N94 ⇒ S5 S7	Bus N94
Saarmund	BSAM			RB22 ⇒ Bus 624		
Sachsenhausen	BSAH			RB12 Bus 804 821		
Samariterstraße			Sa	U5	U5	N5
Savignyplatz		BSAP		S3 S5 S7 S9 ⇒ Tram M49 Express X34	S7 S9 ⇒ Tram M49	⇒ Tram M49
Scharnweberstraße			Scha	U6 Bus 221 ⇒ Bus 125	U6	N6
Schichauweg		BSC		S2 Express X83 Bus 175	S2	
Schillingstraße			Si	U5	U5	N5
Schlachtensee		BSLS		S1	S1	
Schlesisches Tor			S	U1 U3 Bus 165 265	U1 Bus N65	N1 Bus N65
Schloßstraße			Slo, Slu	U9 Tram M48 M85 Bus 186 282	U9 Tram M48	N9 Tram M48
Schmachtenhagen	BSHN			RB27 Bus 805		
Schöneberg		BSGR, BSGV		S1 S41 S42 S46 Tram M46 Bus 248	S1 S41 S42 Tram M46	Tram M46
Schönerlinde	BSL			RB27 ⇒ Bus 891		
Schöneweide	BSWP	BSW		RB24 S45 S46 S47 S8 S85 S9 Tram M17 Bahn 21 37 60 67 Tram M11 Express X11 Bus 160 163 165 166 265	S46 S47 S8 S9 Tram M17 Tram M11 Bus N65 N67	Tram M17 Tram M11 Bus N65 N67
Schönfließ		BSNF		S8 ⇒ Bus 809 810		
Schönhauser Allee		BSAL	Sh	S41 S42 S8 S85 U2 Tram M1	S41 S42 S8 U2 Tram M1	N2 Tram M1
Schönholz		BSNH		S1 S25 S26 Bus 150 327 ⇒ Bus 155	S1 S2 Bus N52	Bus N52
Schönleinstraße			ST	U8 ⇒ Tram M41	U8 ⇒ Tram M41	N8 ⇒ Tram M41
Schönwalde (BAR)	BSWH			RB27 Bus 891		
Schulzendorf		BSZF		S25 Bus 124	S25 Bus N24	Bus N24
Schwartzkopffstraße			SK	U6	U6	N6
Seddin	BSE			RE7 RB23 Bus 643 646		
Seegefeld	BSFD			RB10 RB14 Bus 648		
Seestraße			Se	U6 Tram M13 Bahn 50 Bus 106 120	U6 Tram M13 Bus N20 N26	N6 Tram M13 Bus N20 N26
Senefelderplatz			Sz	U2 ⇒ Tram M1 M2 Bahn 12	U2 ⇒ Tram M1 M2	N2 ⇒ Tram M1 M2
Siemensdamm			Sie	U7 Bus 123 139	U7	N7
Siemensstadt [außer Betrieb]		BSMS	⇒ Rm	⇒ U7 Bus 123 139	⇒ U7 Bus N23 N39	⇒ N7 Bus N23 N39
Sonnenallee		BSO		S41 S42 Tram M41 Bus 171	S41 S42 Tram M41 Bus N79	N7 Tram M41 Bus N79
Sophie-Charlotte-Platz			So	U2 Bus 309	U2	N2
Spandau	BSPD	BSPA	⇒ RSp	DB RE2 RE4 RE6 RB10 RB13 RB14 S3 S9 ⇒ U7 Tram M32 M37 M45 Express X33 X36 Bus 130 134 135 136 137 236 237 337 638 671	S9 ⇒ U7 Tram M32 M37 M45 Bus N30 N34	⇒ N7 Tram M32 M37 M45 Bus N30 N34
Spichernstraße			Sno, Snu	U3 U9 Bus 204	U3 U9	N3 N9
Spindlersfeld		BSPF		S47 Bahn 61 63 Bus 165	S47 Bus N65	Bus N65
Spittelmarkt			Sp	U2 Bus 200 248 265	U2	N2
Springpfuhl		BSPH		S7 S75 Tram M8 Bahn 18 Bus 194	S7 S75 Tram M8	Tram M8
Staaken	BSTA			RE4 RB13 Tram M32 ⇒ Bus 237	Tram M32	Tram M32

Bahnhof	Kürzel DB	Kürzel S	Kürzel U	Tagesverkehr	Nachtverkehr Fr/Sa + Sa/So	Nachtverkehr sonstige
Stadtmitte			Mi, Mic	U2 U6 Bus 200 265	U2 U6	N2 N6
Storkow (Mark)	BSTW			RB36 Bus 405 406 407 435		
Storkower Straße		BSTO		S41 S42 S8 S85 Tram 156 240 ⇒ Bus 21	S41 S42 S8	
Strausberg	BST	BSTV		RB26 S5 Bus 89 Bus 885 923 926 927 929 931 932 933 934 936 937 950 955 966	S5	
Strausberg Nord		BSTN		S5 Bus 885 927 929 931 937 946 947 966	S5	
Strausberg Stadt		BSTR		S5 Bus 923 926 927 929 931 937 947 966	S5	
Strausberger Platz			Sr	U5 Bus 142	U5	N5
Stresow		BSRW		S8 S9 Bus 130 ⇒ M M45	S9 ⇒ M M45	⇒ M M45
Südende		BSDE ⇒ BATS		S25 S26 Bus 282 ⇒ S2 Bus 184	S25 ⇒ S2 Bus N84	⇒ Bus N84
Südkreuz	BPAF	BSKR, BSKV		DB RB3 RB4 RB5 RB10 S2 S25 S26 S41 S42 S45 S46 M M46 Bus 106 184 204 248	S2 S25 S41 S42 M M46	M M46
Südstern			Sü	U7 ⇒ M M41	U7 ⇒ M M41	N7 ⇒ M M41
Sundgauer Straße		BSDG		S1 X X11 ⇒ M M48 Bus 101	S1 ⇒ M M48	⇒ M M48
Tegel		BTG	⇒ Tg	S25 Bus 133 ⇒ U6 Bus 124 125 220 222	S25 Bus N25 ⇒ U6 Bus N22 N24 N33	Bus N25 ⇒ Bus N22 N24 N33
Teltow	BTL			RE4 X X1 Bus 600 601 704		
Teltow Stadt		BTLS		S25 S26 X X1 X10 Bus 600 601 615 620 621 625 626 704	S25 Bus N13	Bus N13
Tempelhof		BTHF	Ts	S41 S42 S45 S46 U6 Bus 140 184	S41 S42 S46 U6 Bus N84	N6 Bus N84
Theodor-Heuss-Platz			Th	U2 M M49 X X34 X49 Bus 104 218 349	U2 M M49 Bus N42	N2 M M49 Bus N42
Tiergarten		BTGN		S3 S5 S7 S9	S7 S9	N9
Tierpark			Tk	U5 M M17 Tram 27 37 Bus 296	U5 M M17 Bus 50	M M17 Bus 50
Treptower Park		BTP		S41 S42 S8 S85 S9 Bus 104 165 166 194 265	S41 S42 S8 S9 Bus N65 N94	Bus N65 N94
Turmstraße			Tm	U9 M M27 X TXL Bus 101 123 187 245	U9 M M27 Bus N40	N9 M M27 Bus N40
Uhlandstraße			U	U1 M M19 M29 X X10 Bus 109 110	U1 M M19 M29 Bus N10	M M19 M29 Bus N10
Ullsteinstraße			Ull	U6 Bus 170	U6	N6
Unter den Linden [in Bau]			ULO, ULU	Bus 100 147 245 300 ⇒ U6	⇒ U6	N6
Velten	BVLT			RE6 RB55 Bus 807 816 824		
Viktoria-Luise-Platz			V	U4 ⇒ M M46 Bus 204	⇒ M M46	⇒ M M46
Vinetastraße			VIN	U2 M M1 Tram 50 Bus 250	U2 M M1	N2 M M1
Voltastraße			Vo	U8 Bus 247	U8	N8
Waidmannslust		BWAI		S1 S26 Bus 222 322 ⇒ Bus 122 220	S1 Bus N22 ⇒ Bus N20	Bus N22 ⇒ Bus N20
Walther-Schreiber-Platz			Wsg	U9 M M48 M76 M85 X X76 Bus 181 186	U9 M M48 M76 Bus N81	N9 M M48 M76 Bus N81
Wandlitz	BWAZ			RB27 Bus 891 894 897 902 909		
Wandlitzsee	BWAS			RB27 Bus 894 897 902 909		
Wannsee	BWS	BWSS		DB RB1 RB7 RB21 RB22 RB33 S1 S7 Bus 114 118 218 316 318 620 F F10	S1 S7 Bus N16	Bus N16
Warschauer Straße		BWRS	WA	S3 S5 S7 S75 S9 U1 U3 M M10 M13 Bus 300 347	S5 S7 S9 U1 M M10 M13	N1 M M10 M13
Wartenberg		BWAB		S75 Bus 256 ⇒ M M4 M5	S75 Bus N56 ⇒ M M5	Bus N56 ⇒ M M5
Weberwiese			WR	U5 Bus 347	U5	N5
Wedding		BWED	We	S41 S42 S46 U6 M M27 Bus 120 247	S41 S42 U6 M M27 Bus N20	N6 M M27 Bus N20
Weinmeisterstraße			W	U8 M M1	U8 M M1 Bus N40 N42 N65	N2 N6 N8 M M1 Bus N40 N42 N65
Wensickendorf	BWSD			RB27 Bus 805		
Werder (Havel)	BWE			RE1 Bus 607 630 631 632 633 634		
Wernerwerk [außer Betrieb]		BWRK	⇒ Sie	⇒ U7 Bus 123 139	⇒ U7	⇒ N7
Westend		BWES		S41 S42 S46 M M45 ⇒ Bus 139 309	S41 S42 M M45	M M45
Westhafen		BWH	WF	S41 S42 S46 U9	S41 S42 U9	N9
Westkreuz		BWKRR, BWKS		S3 S41 S42 S46 S5 S7 S9 Bus 104	S41 S42 S7 S9 Bus N42	Bus N42
Westphalweg			Wl	U6 Bus 282	U6	N6
Wildau		BWI		S46 Bus 736 737 738	S46	
Wilhelmshagen		BWIG		S3 Bus 161	S3 Bus N61	Bus N61
Wilhelmshorst	BWHO			RE7 RB33 ⇒ Bus 608 613		
Wilhelmsruh		BWM		S1 S26 Bus 122	S1	
Wilmersdorfer Straße	⇒ BCHB	⇒ BCHS	Wd	U7 X X34 X49 Bus 309 310 ⇒ RE1 RE7 RB14 RB21 RB22 S3 S5 S7 S9 Bus 109	U7 M M49 ⇒ S7 S9	M M49
Wittenau		BWIN	WIU	S1 S26 U8 M M21 X X21 X33 Bus 120 122 124 220 221	S1 U8 M M21 Bus N20 N24	N8 M M21 Bus N20 N24
Wittenbergplatz			Wt	U1 U2 U3 M M19 M29 M46	U1 U2 U3 M M19 M29 M46	N1 N2 N3 M M19 M29 M46
Wollankstraße		BWOK		S1 S25 S26 M M27 Bus 250 255	S1 S25 M M27	M M27
Wuhletal		BWT	Wh	S5 U5 Bus 191 291	S5 U5 Bus N69 N90 N91 N95	N5 Bus N69 N90 N91 N95
Wuhlheide		BWHH		S3 Bus 190	S3	
Wünsdorf-Waldstadt	BWUE			RE5 RE7 Bus 700 706 712 770		
Wustermark	BWUS			RE4 RB13 RB21 Bus 649 650 663		
Wutzkyallee			Wk	U7 ⇒ M M11	U7 ⇒ M M11	⇒ N7 M M11
Yorckstraße		BYOR ⇒ BGGS Y		S2 S25 S26 U7 M M19 ⇒ S1	S2 S25 U7 M M19 ⇒ S1	N7 M M19
Zeesen	BZS			RB24 Bus 724 727		
Zehlendorf		BZD		S1 X X10 Bus 101 112 115 285 623 ⇒ M M48 X X11 Bus 118	S1 Bus N10 N12 N84 ⇒ M M48 Bus N18	Bus N10 N12 N84 ⇒ M M48 Bus N18
Zepernick		BZEP		S2 Bus 867 868 891 893 899 900 901	S2	
Zernsdorf	BZF			RB36 ⇒ Bus 721 723		
Zeuthen		BZTH		S46 S8 Bus 731 733 734	S46	
Zitadelle			Zi	U7 X X33	U7	N7
Zoologischer Garten	BZOO	BZOS	Zo, Zu	RE1 RE2 RE7 RB14 RB21 RB22 S3 S5 S7 S9 U2 U9 M M45 M46 M49 X X9 X10 X34 Bus 100 109 110 200 204 245 249	S7 S9 U2 U9 M M45 M46 M49 Bus N10 N26	N1 N2 N9 M M45 M46 M49 Bus N10 N26
Zossen	BZO			RE5 RE7 Bus 700 701 706 707 714 716 729 770 771 789 790 791 795 796		
Zühlsdorf	BZUH			RB27 Bus 806 ⇒ Bus 891		
Zwickauer Damm			Zd	U7 Bus 373 ⇒ M M11 Bus 171	U7 ⇒ M M11	⇒ N7 M M11

Linie	Fahrtweg	Takt
M1	BPKW $\overset{3}{\leftrightarrow}$ VIN $\overset{4}{\leftrightarrow}$ BSAL $\overset{4}{\leftrightarrow}$ EB $\overset{5}{\leftrightarrow}$ Ro $\overset{2}{\leftrightarrow}$ BHKM $\overset{3}{\leftrightarrow}$ BORS $\overset{3}{\leftrightarrow}$ Ob $\overset{2}{\leftrightarrow}$ BFST	t: 7,5-10, f/a: 20, n: 30
M2	BPLA $\overset{12}{\leftrightarrow}$ BALX	t: 5-7, f/a: 10, n: 30
M4	BHH $\overset{18}{\leftrightarrow}$ BGSS $\overset{12}{\leftrightarrow}$ BALX $\overset{3}{\leftrightarrow}$ BHKM	t: 3-10, f/a: 20, n: 30
M5	BLST $\overset{13}{\leftrightarrow}$ BALX $\overset{3}{\leftrightarrow}$ BHKM $\overset{3}{\leftrightarrow}$ BORS $\overset{2}{\leftrightarrow}$ Ob $\overset{3}{\leftrightarrow}$ NA $\overset{5}{\leftrightarrow}$ BHBF	t: 5-20, f/a: 10-20, n: 30
M6	Hd $\overset{18}{\leftrightarrow}$ BMAZ $\overset{18}{\leftrightarrow}$ BLST $\overset{13}{\leftrightarrow}$ BALX $\overset{3}{\leftrightarrow}$ BHKM	t: 10, f/a: 15-20, n: 30
M8	BSPH $\overset{15}{\leftrightarrow}$ BLST $\overset{11}{\leftrightarrow}$ Lu $\overset{2}{\leftrightarrow}$ Ro $\overset{5}{\leftrightarrow}$ BNB $\overset{3}{\leftrightarrow}$ NA $\overset{4}{\leftrightarrow}$ BHBF	t: 5-10, f/a: 20, n: 30
M10	BHBF $\overset{5}{\leftrightarrow}$ NA $\overset{2}{\leftrightarrow}$ BNB $\overset{3}{\leftrightarrow}$ B $\overset{5}{\leftrightarrow}$ EB $\overset{16}{\leftrightarrow}$ Ft $\overset{5}{\leftrightarrow}$ BWRS	t: 5, f/a: 10-15, n: 30
M13	Se $\overset{5}{\leftrightarrow}$ Olo $\overset{5}{\leftrightarrow}$ BBOS $\overset{33}{\leftrightarrow}$ BFA $\overset{10}{\leftrightarrow}$ BWRS	t: 10, f/a: 20, n: 30
M17	BHH $\overset{18}{\leftrightarrow}$ BFFO $\overset{6}{\leftrightarrow}$ Tk $\overset{5}{\leftrightarrow}$ BKLH $\overset{11}{\leftrightarrow}$ BSW	t: 10, f/a: 20, n: 30
12	EB $\overset{8}{\leftrightarrow}$ BNB $\overset{3}{\leftrightarrow}$ NA $\overset{3}{\leftrightarrow}$ Ob $\overset{2}{\leftrightarrow}$ BFST	t: 10, f/a: 20
16	BMAZ $\overset{23}{\leftrightarrow}$ BFA	t: 10, f/a: 20, So: –
18	Hd $\overset{20}{\leftrightarrow}$ BSPH	H: 10, N: 20, So: –
21	BLI $\overset{22}{\leftrightarrow}$ Ft $\overset{9}{\leftrightarrow}$ BRH $\overset{19}{\leftrightarrow}$ BSW	t/f/a: 20
27	BFFO $\overset{6}{\leftrightarrow}$ Tk $\overset{5}{\leftrightarrow}$ BKLH	t/f/a: 20
37	BLI $\overset{11}{\leftrightarrow}$ BFFO $\overset{6}{\leftrightarrow}$ Tk $\overset{5}{\leftrightarrow}$ BKLH $\overset{11}{\leftrightarrow}$ BSW	t: 20, Sa/So: –

Linie	Fahrtweg	Takt
50	BPDH $\overset{7}{\leftrightarrow}$ BPKW $\overset{3}{\leftrightarrow}$ VIN $\overset{7}{\leftrightarrow}$ BBOS $\overset{5}{\leftrightarrow}$ Olo $\overset{5}{\leftrightarrow}$ Se	t: 10, f/a: 20
60	BSW $\overset{28}{\leftrightarrow}$ BFRH	t: 20
61	BADL $\overset{6}{\leftrightarrow}$ BSPF $\overset{24}{\leftrightarrow}$ BFRH	t: 20
62	BKPK $\overset{20}{\leftrightarrow}$ BMDF	t: 20
63	BADL $\overset{6}{\leftrightarrow}$ BSPF $\overset{13}{\leftrightarrow}$ BKPK	t: 20
68	BKPK $\overset{19}{\leftrightarrow}$ BGAS	t: 20
M11	Dd $\overset{7}{\leftrightarrow}$ BLWE $\overset{10}{\leftrightarrow}$ BLIO $\overset{15}{\leftrightarrow}$ BBCH $\overset{15}{\leftrightarrow}$ Jt $\overset{22}{\leftrightarrow}$ BSW	t: 10, f/a: 20, n: 30
M19	BGWD $\overset{9}{\leftrightarrow}$ BHAL $\overset{4}{\leftrightarrow}$ Ad $\overset{6}{\leftrightarrow}$ U $\overset{2}{\leftrightarrow}$ Kfo $\overset{4}{\leftrightarrow}$ Wt $\overset{2}{\leftrightarrow}$ Nm $\overset{2}{\leftrightarrow}$ BS $\overset{4}{\leftrightarrow}$ BGGS $\overset{1}{\leftrightarrow}$ BYOR $\overset{3}{\leftrightarrow}$ Me	t: 10, f/a: 20, n: 30
M21	BWIN $\overset{8}{\leftrightarrow}$ BKBO $\overset{5}{\leftrightarrow}$ Sch $\overset{9}{\leftrightarrow}$ JK $\overset{4}{\leftrightarrow}$ BJUN	t: 10, f/a: 20, n: 30
M27	BPKW $\overset{6}{\leftrightarrow}$ BWOK $\overset{6}{\leftrightarrow}$ Pk $\overset{5}{\leftrightarrow}$ BWED $\overset{1}{\leftrightarrow}$ Ri $\overset{12}{\leftrightarrow}$ Tm $\overset{11}{\leftrightarrow}$ Mp $\overset{4}{\leftrightarrow}$ BJUN	t: 6-7, f/a: 10-20, n: 30
M29	BHAL $\overset{4}{\leftrightarrow}$ Ad $\overset{6}{\leftrightarrow}$ U $\overset{2}{\leftrightarrow}$ Kfo $\overset{4}{\leftrightarrow}$ Wt $\overset{8}{\leftrightarrow}$ MB $\overset{3}{\leftrightarrow}$ BAHU $\overset{4}{\leftrightarrow}$ Ks $\overset{5}{\leftrightarrow}$ Mr $\overset{7}{\leftrightarrow}$ Gr $\overset{10}{\leftrightarrow}$ Hpo	t: 5-10, f/a: 10-20, n: 30
M32	BSPA $\overset{15}{\leftrightarrow}$ BSTA	t: 5-7, f/a: 10-20, n: 30
M41	BKHD $\overset{4}{\leftrightarrow}$ BSO $\overset{10}{\leftrightarrow}$ Hpo $\overset{11}{\leftrightarrow}$ Ho $\overset{4}{\leftrightarrow}$ BAHU $\overset{2}{\leftrightarrow}$ BPOP $\overset{7}{\leftrightarrow}$ BHBF	t: 4-10, f/a: 20, n: 30
M45	BSPA $\overset{11}{\leftrightarrow}$ Rl $\overset{10}{\leftrightarrow}$ BWES $\overset{7}{\leftrightarrow}$ Rw $\overset{5}{\leftrightarrow}$ RP $\overset{4}{\leftrightarrow}$ BZOS	t: 6-10, f/a: 20, n: 30
M46	BZOS $\overset{3}{\leftrightarrow}$ Kfo $\overset{4}{\leftrightarrow}$ Wt $\overset{11}{\leftrightarrow}$ BSGR $\overset{4}{\leftrightarrow}$ BSKR $\overset{9}{\leftrightarrow}$ At $\overset{16}{\leftrightarrow}$ Pi $\overset{8}{\leftrightarrow}$ Br	t: 5-10, f/a: 20, n: 30

Linie	Fahrtweg	Takt
M48	BRST $\overset{4}{\leftrightarrow}$ Slo $\overset{2}{\leftrightarrow}$ Wsg $\overset{5}{\leftrightarrow}$ BIP $\overset{7}{\leftrightarrow}$ Kt $\overset{3}{\leftrightarrow}$ BS $\overset{1}{\leftrightarrow}$ Kus $\overset{8}{\leftrightarrow}$ BPOP $\overset{2}{\leftrightarrow}$ MH	t: 10, f/a: 20, n: 30
M49	BHST $\overset{3}{\leftrightarrow}$ Th $\overset{4}{\leftrightarrow}$ BMN $\overset{6}{\leftrightarrow}$ Wd $\overset{7}{\leftrightarrow}$ BZOS	t: 10, f/a: 20, n: 30
M76	Wsg $\overset{2}{\leftrightarrow}$ BFB $\overset{6}{\leftrightarrow}$ BPRI $\overset{11}{\leftrightarrow}$ Mf $\overset{22}{\leftrightarrow}$ BLRD	t: 5-10, f/a: 20, n: 30
M77	Mf $\overset{8}{\leftrightarrow}$ BMF	t: 10, f/a: 20, n: 30
M82	BRST $\overset{10}{\leftrightarrow}$ BLAK	t: 6-10, f/a: 20, n: 30
M85	BLIS $\overset{24}{\leftrightarrow}$ BRST $\overset{4}{\leftrightarrow}$ Slo $\overset{2}{\leftrightarrow}$ Wsg $\overset{5}{\leftrightarrow}$ BIP $\overset{7}{\leftrightarrow}$ Kt $\overset{3}{\leftrightarrow}$ BS $\overset{1}{\leftrightarrow}$ Kus $\overset{8}{\leftrightarrow}$ BPOP $\overset{6}{\leftrightarrow}$ BHBF	t: 10, f/a: 20, n: 30
TXL	TXL $\overset{8}{\leftrightarrow}$ BBEU $\overset{6}{\leftrightarrow}$ Tm $\overset{6}{\leftrightarrow}$ BHBF	t: 6, f/a: 10
X7	R $\overset{7}{\leftrightarrow}$ SXF	t: 10, f/a: 20
X9	TXL $\overset{4}{\leftrightarrow}$ JK $\overset{4}{\leftrightarrow}$ BJUN $\overset{8}{\leftrightarrow}$ RP $\overset{4}{\leftrightarrow}$ BZOS	t: 10, a: 20
X10	BZOS $\overset{3}{\leftrightarrow}$ Kfo $\overset{1}{\leftrightarrow}$ U $\overset{5}{\leftrightarrow}$ Ad $\overset{3}{\leftrightarrow}$ BHAL $\overset{12}{\leftrightarrow}$ Os $\overset{7}{\leftrightarrow}$ BZD ($\overset{12}{\leftrightarrow}$ BTLS, nur zur HVZ)	t: 10-20, f/a: 20
X11	K $\overset{10}{\leftrightarrow}$ BSDG $\overset{14}{\leftrightarrow}$ BLIO $\overset{12}{\leftrightarrow}$ BBCH $\overset{12}{\leftrightarrow}$ Jt $\overset{15}{\leftrightarrow}$ BSW	t: 10-20, f/a: 20
X21	BWIN $\overset{6}{\leftrightarrow}$ BKBO $\overset{4}{\leftrightarrow}$ Sch $\overset{8}{\leftrightarrow}$ JK	t: 10, f/a: 20
X33	BSPA $\overset{2}{\leftrightarrow}$ AS $\overset{3}{\leftrightarrow}$ Zi $\overset{2}{\leftrightarrow}$ Hs $\overset{17}{\leftrightarrow}$ Hh $\overset{8}{\leftrightarrow}$ RR $\overset{3}{\leftrightarrow}$ BWIN	t: 6-10, f/a: 20
X34	BHST $\overset{2}{\leftrightarrow}$ Th $\overset{3}{\leftrightarrow}$ BMN $\overset{5}{\leftrightarrow}$ Wd $\overset{7}{\leftrightarrow}$ BZOS	t: 10, f/a: 20
X36	BSPA $\overset{18}{\leftrightarrow}$ Hs	t: 10, Sa-So: –

Linie	Fahrtweg	Takt
X49	BHST $\overset{2}{\leftrightarrow}$ Th $\overset{3}{\leftrightarrow}$ BMN $\overset{4}{\leftrightarrow}$ BCHS	H: 10-20, So: –
X54	BPKW $\overset{25}{\leftrightarrow}$ BHH $\overset{9}{\leftrightarrow}$ BRWA $\overset{4}{\leftrightarrow}$ BMAZ ($\overset{14}{\leftrightarrow}$ Hd, nur Mo-Sa)	t: 10-20, f/a: 20
X69	BMEA $\overset{18}{\leftrightarrow}$ E $\overset{13}{\leftrightarrow}$ BKPK	t: 20
X76	Wsg $\overset{2}{\leftrightarrow}$ BFB $\overset{4}{\leftrightarrow}$ BPRI $\overset{11}{\leftrightarrow}$ Mf	t: 20, So: –
X83	Dd $\overset{8}{\leftrightarrow}$ BRST $\overset{8}{\leftrightarrow}$ BLAK $\overset{19}{\leftrightarrow}$ BSC	t: 5-10, f/a: 20
100	BZOS $\overset{17}{\leftrightarrow}$ BTOR $\overset{2}{\leftrightarrow}$ ULO $\overset{2}{\leftrightarrow}$ MIN $\overset{5}{\leftrightarrow}$ BALX	t: 5-10, f/a: 20
101	Tm $\overset{23}{\leftrightarrow}$ Kn $\overset{2}{\leftrightarrow}$ Fpo $\overset{2}{\leftrightarrow}$ Bli $\overset{8}{\leftrightarrow}$ Bt $\overset{16}{\leftrightarrow}$ BZD	t: 10-20, f/a: 20
104	Nd $\overset{4}{\leftrightarrow}$ Th $\overset{7}{\leftrightarrow}$ BHAL $\overset{8}{\leftrightarrow}$ Fpo $\overset{2}{\leftrightarrow}$ Bli $\overset{3}{\leftrightarrow}$ Beo $\overset{11}{\leftrightarrow}$ BJLB $\overset{16}{\leftrightarrow}$ PL $\overset{8}{\leftrightarrow}$ Bo $\overset{6}{\leftrightarrow}$ Rk $\overset{11}{\leftrightarrow}$ BTP	t: 5-20, f/a: 20
106	Se $\overset{11}{\leftrightarrow}$ BBEU $\overset{10}{\leftrightarrow}$ Ha $\overset{9}{\leftrightarrow}$ Nm $\overset{2}{\leftrightarrow}$ BS $\overset{3}{\leftrightarrow}$ Kt $\overset{3}{\leftrightarrow}$ BJLB $\overset{5}{\leftrightarrow}$ BSKR	t: 20, f/a: 20
108	BLI $\overset{14}{\leftrightarrow}$ E	t: 10-20, f/a: 20
109	TXL $\overset{5}{\leftrightarrow}$ JK $\overset{2}{\leftrightarrow}$ BJUN $\overset{11}{\leftrightarrow}$ BCHS $\overset{2}{\leftrightarrow}$ Ad $\overset{5}{\leftrightarrow}$ U $\overset{2}{\leftrightarrow}$ Kfo $\overset{2}{\leftrightarrow}$ BZOS	t: 10, f/a: 20
110	BZOS $\overset{3}{\leftrightarrow}$ Kfo $\overset{1}{\leftrightarrow}$ U $\overset{5}{\leftrightarrow}$ Ad $\overset{19}{\leftrightarrow}$ T $\overset{2}{\leftrightarrow}$ Os	t: 20, f/a: 20
112	BNIS $\overset{15}{\leftrightarrow}$ BZD $\overset{19}{\leftrightarrow}$ BOSS	t: 10-20, f/a: 20
115	BZD $\overset{7}{\leftrightarrow}$ Os $\overset{14}{\leftrightarrow}$ BHO $\overset{3}{\leftrightarrow}$ Fpo	t: 10-20, f/a: 20-30
118	Ot $\overset{5}{\leftrightarrow}$ K $\overset{2}{\leftrightarrow}$ BMEX $\overset{16}{\leftrightarrow}$ BWSS	t: 10-20, f/a: 20

Linie	Fahrtweg	Takt
120	BWIN $\overset{9}{\leftrightarrow}$ PB $\overset{13}{\leftrightarrow}$ Se $\overset{4}{\leftrightarrow}$ Lpo $\overset{3}{\leftrightarrow}$ BWED $\overset{3}{\leftrightarrow}$ Ri $\overset{7}{\leftrightarrow}$ BHBF	t: 10-20, f/a: 20
122	Sch $\overset{5}{\leftrightarrow}$ PB $\overset{7}{\leftrightarrow}$ RE $\overset{6}{\leftrightarrow}$ BWM $\overset{28}{\leftrightarrow}$ BWIN	t: 5-20, f/a: 20
123	BHBF $\overset{15}{\leftrightarrow}$ Tm $\overset{6}{\leftrightarrow}$ BBEU $\overset{16}{\leftrightarrow}$ JK $\overset{5}{\leftrightarrow}$ Hl $\overset{5}{\leftrightarrow}$ Sie $\overset{3}{\leftrightarrow}$ Rm	t: 10-20, f/a: 20
124	BWIN $\overset{10}{\leftrightarrow}$ BTG $\overset{4}{\leftrightarrow}$ Tg $\overset{9}{\leftrightarrow}$ BSZF $\overset{4}{\leftrightarrow}$ BHLS	t: 10-20, f/a: 20
125	Olo $\overset{10}{\leftrightarrow}$ RE $\overset{9}{\leftrightarrow}$ Sch $\overset{22}{\leftrightarrow}$ BTG $\overset{4}{\leftrightarrow}$ Tg $\overset{22}{\leftrightarrow}$ BFOH	t: 10-20, f/a: 20
128	TXL $\overset{9}{\leftrightarrow}$ Sch $\overset{12}{\leftrightarrow}$ FN $\overset{3}{\leftrightarrow}$ Olo	t: 10, f/a: 20-30
130	BSPA $\overset{5}{\leftrightarrow}$ BSRW ($\overset{8}{\leftrightarrow}$ Rl, nur Mo-Fr zur HVZ)	t: 10-20, f/a: 20
133	Tg $\overset{3}{\leftrightarrow}$ BTG $\overset{4}{\leftrightarrow}$ Bk $\overset{4}{\leftrightarrow}$ Hh $\overset{17}{\leftrightarrow}$ Hh	t: 10-20, f/a: 20
136	BRST $\overset{32}{\leftrightarrow}$ BHD	H: 20, N: 30-60
139	P $\overset{2}{\leftrightarrow}$ Rm $\overset{2}{\leftrightarrow}$ Sie $\overset{11}{\leftrightarrow}$ Kd $\overset{3}{\leftrightarrow}$ BMN	t: 20
140	BTHF $\overset{2}{\leftrightarrow}$ At $\overset{14}{\leftrightarrow}$ Me $\overset{1}{\leftrightarrow}$ Gs $\overset{6}{\leftrightarrow}$ Pr $\overset{7}{\leftrightarrow}$ Kbo $\overset{12}{\leftrightarrow}$ BOSB	t: 10-20, f/a: 20
142	BOSB $\overset{5}{\leftrightarrow}$ Sr $\overset{10}{\leftrightarrow}$ Lu $\overset{2}{\leftrightarrow}$ Ro $\overset{4}{\leftrightarrow}$ Ob $\overset{8}{\leftrightarrow}$ BHBF ($\overset{10}{\leftrightarrow}$ Am $\overset{3}{\leftrightarrow}$ Lpo, nur Mo-Sa tagsüber)	t: 20, a/f: 20
147	BHBF $\overset{8}{\leftrightarrow}$ BFST $\overset{1}{\leftrightarrow}$ ULO $\overset{3}{\leftrightarrow}$ Fr $\overset{5}{\leftrightarrow}$ Mk ($\overset{10}{\leftrightarrow}$ BOSB, nur Mo-Sa tagsüber)	t: 10-20, a/f: 20
150	Olo $\overset{6}{\leftrightarrow}$ BSNH $\overset{15}{\leftrightarrow}$ BBLB $\overset{26}{\leftrightarrow}$ BBU	H: 10, N: 20
154	BBLB $\overset{25}{\leftrightarrow}$ BHH $\overset{11}{\leftrightarrow}$ BRWA $\overset{17}{\leftrightarrow}$ E	t: 20, a/f: 20-30

Linie	Fahrtweg	Takt
156	BSTO $\overset{4}{\leftrightarrow}$ BLST $\overset{11}{\leftrightarrow}$ BPLA	t: 20, So: –
160	BSW $\overset{25}{\leftrightarrow}$ BAGL	t: 20, a/f: 20
161	BRD $\overset{12}{\leftrightarrow}$ BWIG $\overset{12}{\leftrightarrow}$ BE	t: 20
162	BADL $\overset{14}{\leftrightarrow}$ R	H: 10, N: 20
163	BSW $\overset{10}{\leftrightarrow}$ BADL $\overset{14}{\leftrightarrow}$ BGAS $\overset{15}{\leftrightarrow}$ BFLH	t/f: 20, a: 30, Sa/So: 30
164	BKPK $\overset{18}{\leftrightarrow}$ BADL $\overset{16}{\leftrightarrow}$ BFLH $\overset{3}{\leftrightarrow}$ SXF	t: 20, f/a: 20
165	Mk $\overset{2}{\leftrightarrow}$ He $\overset{6}{\leftrightarrow}$ S $\overset{7}{\leftrightarrow}$ BTP $\overset{5}{\leftrightarrow}$ BPWD $\overset{9}{\leftrightarrow}$ BSW $\overset{11}{\leftrightarrow}$ BSPF	H: 10-20, N: 20
166	BSW $\overset{15}{\leftrightarrow}$ BPWD $\overset{6}{\leftrightarrow}$ BTP $\overset{11}{\leftrightarrow}$ Rk $\overset{5}{\leftrightarrow}$ Bo	t: 20
169	E $\overset{18}{\leftrightarrow}$ BKPK	H: 10, N: 20
170	BRST $\overset{9}{\leftrightarrow}$ BPRI $\overset{7}{\leftrightarrow}$ Ull $\overset{14}{\leftrightarrow}$ Bl $\overset{11}{\leftrightarrow}$ BBMW	t: 10-20, f/a: 20-30
171	Hpo $\overset{18}{\leftrightarrow}$ BSO $\overset{5}{\leftrightarrow}$ BNK $\overset{3}{\leftrightarrow}$ Gz $\overset{23}{\leftrightarrow}$ R $\overset{9}{\leftrightarrow}$ BFLH $\overset{3}{\leftrightarrow}$ SXF	H: 10-20, N: 20
172	R $\overset{23}{\leftrightarrow}$ Jt $\overset{27}{\leftrightarrow}$ BLRD	H: 10, N: 10-20
175	BLRD $\overset{23}{\rightarrow}$ BLRD $\overset{5}{\rightarrow}$ BSC $\overset{8}{\rightarrow}$ BLRD	H: 10-2ß, N: 20
181	Wsg $\overset{1}{\leftrightarrow}$ BFB $\overset{13}{\leftrightarrow}$ BLAK $\overset{12}{\leftrightarrow}$ Mf $\overset{12}{\leftrightarrow}$ Br	t: 5-10, f/a: 20
184	BLIO $\overset{10}{\leftrightarrow}$ BATS $\overset{9}{\leftrightarrow}$ Ka $\overset{3}{\leftrightarrow}$ At $\overset{2}{\leftrightarrow}$ BTHF ($\overset{7}{\leftrightarrow}$ BSKR, nur Mo-Sa tagsüber)	t: 10-20, a/f: 20

Linie	Fahrtweg	Takt
186	BGWD $\overset{14}{\leftrightarrow}$ Rd $\overset{4}{\leftrightarrow}$ Fw $\overset{5}{\leftrightarrow}$ Wsg $\overset{2}{\leftrightarrow}$ Slo $\overset{5}{\leftrightarrow}$ BRST $\overset{16}{\leftrightarrow}$ BOSS $\overset{4}{\leftrightarrow}$ BLIS	t: 5-20, a/f: 20
187	Tm $\overset{17}{\leftrightarrow}$ Nm $\overset{2}{\leftrightarrow}$ BS $\overset{3}{\leftrightarrow}$ Kt $\overset{7}{\leftrightarrow}$ BIP $\overset{3}{\leftrightarrow}$ BFRU $\overset{14}{\leftrightarrow}$ BLAK	H: 5-20, N: 20
188	BRST $\overset{5}{\leftrightarrow}$ BBGT	H: 10, N: 20
190	E $\overset{14}{\leftrightarrow}$ BWHH	t: 20, f/a: 20
191	BMAZ $\overset{17}{\leftrightarrow}$ KL $\overset{5}{\leftrightarrow}$ BWT	H: 10-20, N: 20
192	BFFO $\overset{12}{\leftrightarrow}$ BBDF $\overset{16}{\leftrightarrow}$ BMAZ	H: 10-20, N: 20
194	Hpo $\overset{18}{\leftrightarrow}$ BTP $\overset{5}{\leftrightarrow}$ BOK $\overset{3}{\leftrightarrow}$ BRH $\overset{1}{\leftrightarrow}$ BNPL $\overset{9}{\leftrightarrow}$ Fi $\overset{8}{\leftrightarrow}$ BFFO $\overset{7}{\leftrightarrow}$ BSPH	H: 10-20, N: 20
195	BMAZ $\overset{17}{\leftrightarrow}$ C $\overset{1}{\leftrightarrow}$ Hd $\overset{6}{\leftrightarrow}$ LL $\overset{11}{\leftrightarrow}$ BMDF	H: 6-7, N: 10, f/a: 20
197	BMDF $\overset{10}{\leftrightarrow}$ BKAD $\overset{3}{\leftrightarrow}$ KL $\overset{2}{\leftrightarrow}$ GK $\overset{20}{\leftrightarrow}$ BMEA $\overset{10}{\leftrightarrow}$ BAF $\overset{13}{\leftrightarrow}$ BHH	H: 10, N: 20
200	BZOS $\overset{14}{\leftrightarrow}$ BPOP $\overset{2}{\leftrightarrow}$ Mic $\overset{3}{\leftrightarrow}$ Sp $\overset{3}{\leftrightarrow}$ RHO $\overset{2}{\leftrightarrow}$ BALX	t: 10, f/a: 20
204	BSKR $\overset{5}{\leftrightarrow}$ BJLB $\overset{4}{\leftrightarrow}$ Kt $\overset{9}{\leftrightarrow}$ Sno $\overset{2}{\leftrightarrow}$ Kfo $\overset{3}{\leftrightarrow}$ BZOS	t: 20, So: –
218	BMN $\overset{4}{\leftrightarrow}$ Th $\overset{3}{\leftrightarrow}$ BHST $\overset{30}{\leftrightarrow}$ BWSS	Mo-Fr: 60/120, Sa/So: 30/60
220	BFOH $\overset{19}{\leftrightarrow}$ BWIN $\overset{6}{\leftrightarrow}$ RR ($\overset{9}{\leftrightarrow}$ BTG $\overset{4}{\leftrightarrow}$ Tg, nur Mo-Sa tagsüber)	t: 20, f/a: 20
221	BWIN $\overset{4}{\leftrightarrow}$ RR $\overset{4}{\leftrightarrow}$ BEBD $\overset{4}{\leftrightarrow}$ Scha $\overset{5}{\leftrightarrow}$ Sch $\overset{2}{\leftrightarrow}$ Afr $\overset{8}{\leftrightarrow}$ Am $\overset{6}{\leftrightarrow}$ Lpo	t: 10-20, f/a: 20
222	Tg $\overset{3}{\leftrightarrow}$ BTG $\overset{9}{\leftrightarrow}$ BWAI	t: 10-20, f/a: 20

Linie	Fahrtweg	Takt
236	BSPA $\overset{21}{\leftrightarrow}$ Hs	t: 10-20, f/a: 20
237	BSPA $\overset{19}{\leftrightarrow}$ BAS	t: 10-20, f/a: 20
240	BOSB $\overset{17}{\leftrightarrow}$ BRH $\overset{1}{\leftrightarrow}$ BNPL $\overset{6}{\leftrightarrow}$ BLI $\overset{5}{\leftrightarrow}$ Md $\overset{11}{\leftrightarrow}$ BSTO	t: 10-20, f/a: 20
245	BZOS $\overset{5}{\leftrightarrow}$ RP $\overset{13}{\leftrightarrow}$ Tm $\overset{9}{\leftrightarrow}$ BHBF $\overset{7}{\leftrightarrow}$ BTOR $\overset{2}{\leftrightarrow}$ ULO $\overset{2}{\leftrightarrow}$ MIN $\overset{8}{\leftrightarrow}$ BALX	t: 5-20, f/a: 20
246	Fw $\overset{12}{\leftrightarrow}$ BPRI $\overset{11}{\leftrightarrow}$ At $\overset{10}{\leftrightarrow}$ BHER	H: 10, N: 20
247	Lpo $\overset{4}{\leftrightarrow}$ Np $\overset{3}{\leftrightarrow}$ BWED $\overset{3}{\leftrightarrow}$ BHUM $\overset{3}{\leftrightarrow}$ BGB $\overset{9}{\leftrightarrow}$ B $\overset{1}{\leftrightarrow}$ Vo $\overset{7}{\leftrightarrow}$ BNB	t: 10-20, f/a: 20
248	BALX $\overset{5}{\leftrightarrow}$ Sp $\overset{9}{\leftrightarrow}$ Ho $\overset{4}{\leftrightarrow}$ Gs $\overset{7}{\leftrightarrow}$ PL $\overset{9}{\leftrightarrow}$ BSKR ($\overset{4}{\leftrightarrow}$ BSGR $\overset{3}{\leftrightarrow}$ BIP $\overset{4}{\leftrightarrow}$ BBUP $\overset{6}{\leftrightarrow}$ Bt, nur Mo-Sa tagsüber)	t: 10-20, f/a: 20
249	BZOS $\overset{3}{\leftrightarrow}$ Kfo $\overset{6}{\leftrightarrow}$ Hz $\overset{3}{\leftrightarrow}$ Bli $\overset{4}{\leftrightarrow}$ BHEI	t: 10, f/a: 20
250	BPKW $\overset{8}{\leftrightarrow}$ VIN ($\overset{11}{\leftrightarrow}$ BWOK $\overset{7}{\leftrightarrow}$ FN, nur Mo-Sa tagsüber)	t: 10-20, f/a: 20
255	BPKW $\overset{7}{\leftrightarrow}$ BWOK $\overset{7}{\leftrightarrow}$ Olo	t: 10, f/a: 20
256	BWAB $\overset{4}{\leftrightarrow}$ BHH $\overset{26}{\leftrightarrow}$ BLI	t: 20, f/a: 20
260	BADL $\overset{24}{\leftrightarrow}$ R	t: 10-20, f/a: 20
265	BSW $\overset{16}{\leftrightarrow}$ BBMW $\overset{11}{\leftrightarrow}$ BTP $\overset{7}{\leftrightarrow}$ S $\overset{6}{\leftrightarrow}$ He $\overset{2}{\leftrightarrow}$ Mk ($\overset{3}{\leftrightarrow}$ Sp $\overset{3}{\leftrightarrow}$ Mi, nur Mo-Sa tagsüber)	t: 20, f/a: 20
269	KL $\overset{3}{\leftrightarrow}$ BKAD $\overset{21}{\leftrightarrow}$ BKPK	t: 20, f/a: 20

Linie	Fahrtweg	Takt
277	BHER $\overset{15}{\leftrightarrow}$ Mf $\overset{13}{\leftrightarrow}$ BBCH	H: 10, N: 20
282	Bt $\overset{5}{\leftrightarrow}$ Slo $\overset{4}{\leftrightarrow}$ BRST $\overset{8}{\leftrightarrow}$ BSDE $\overset{2}{\leftrightarrow}$ BATS $\overset{7}{\leftrightarrow}$ Wl	t: 10, f/a: 20
283	BRST $\overset{10}{\leftrightarrow}$ BLAK $\overset{11}{\leftrightarrow}$ BMF	H: 10-20, N: 20
284	BLIS $\overset{10}{\leftrightarrow}$ BLIO $\overset{6}{\leftrightarrow}$ BLAK ($\overset{10}{\leftrightarrow}$ BRST, nur Mo-Sa tagsüber)	t: 20, f/a: 20
285	Os $\overset{6}{\leftrightarrow}$ BZD $\overset{29}{\leftrightarrow}$ BRST	t: 10-20, f/a: 20, Sa-So: –
291	BMAZ $\overset{4}{\leftrightarrow}$ BPOE $\overset{12}{\leftrightarrow}$ KL $\overset{4}{\leftrightarrow}$ BWT	t: 20, So: –
296	BLI $\overset{4}{\leftrightarrow}$ Fi $\overset{10}{\leftrightarrow}$ Tk $\overset{13}{\leftrightarrow}$ BKLH	t: 10-20, f/a: 20
300	BPOP $\overset{5}{\leftrightarrow}$ MH $\overset{4}{\leftrightarrow}$ ULO $\overset{2}{\leftrightarrow}$ MIN $\overset{6}{\leftrightarrow}$ RHO $\overset{5}{\leftrightarrow}$ BALX $\overset{2}{\leftrightarrow}$ BJB $\overset{4}{\leftrightarrow}$ BOSB $\overset{7}{\leftrightarrow}$ BWRS	t: 10, f/a: 20
309	BCHS $\overset{7}{\leftrightarrow}$ So	t: 20
310	BCHS $\overset{3}{\leftrightarrow}$ Ad $\overset{18}{\leftrightarrow}$ BHEI $\overset{6}{\leftrightarrow}$ Bli	H: 20, N: –, Sa-So: –
322	PB $\overset{2}{\leftrightarrow}$ LD $\overset{6}{\leftrightarrow}$ BEBD $\overset{6}{\leftrightarrow}$ RR $\overset{7}{\leftrightarrow}$ BWAI	t: 20, Sa-So: –
327	Lpo $\overset{4}{\leftrightarrow}$ Np $\overset{5}{\leftrightarrow}$ FN $\overset{3}{\leftrightarrow}$ RE $\overset{9}{\leftrightarrow}$ BSNH	t: 20, So: –
337	BFKS $\overset{29}{\leftrightarrow}$ BSPA	H: 20, N: 30, a/So: 60
347	BOK $\overset{9}{\leftrightarrow}$ BWRS ($\overset{6}{\leftrightarrow}$ WR $\overset{5}{\leftrightarrow}$ BOSB, nur Mo-Sa tagsüber)	t: 20, a/f: 20
349	BGWD $\overset{3}{\rightarrow}$ BMS $\overset{8}{\rightarrow}$ Th $\overset{4}{\rightarrow}$ Nd $\overset{5}{\rightarrow}$ BHST $\overset{3}{\rightarrow}$ Th $\overset{5}{\rightarrow}$ BMS $\overset{2}{\rightarrow}$ BGWD	t: 40, Sa-So: –

Linie	Fahrtweg	Takt
N6	Tg $\overset{2}{\leftrightarrow}$ Bk $\overset{2}{\leftrightarrow}$ Hh $\overset{4}{\leftrightarrow}$ Scha $\overset{3}{\leftrightarrow}$ Sch $\overset{3}{\leftrightarrow}$ Afr $\overset{1}{\leftrightarrow}$ Rb $\overset{3}{\leftrightarrow}$ Se $\overset{3}{\leftrightarrow}$ Lpo $\overset{1}{\leftrightarrow}$ BWED $\overset{2}{\leftrightarrow}$ Ri $\overset{2}{\leftrightarrow}$ Sk $\overset{2}{\leftrightarrow}$ NA $\overset{2}{\leftrightarrow}$ Ob $\overset{1}{\leftrightarrow}$ BFST $\overset{2}{\leftrightarrow}$ ULO $\overset{1}{\leftrightarrow}$ Mi $\overset{2}{\leftrightarrow}$ Ks $\overset{10-15}{\leftrightarrow}$ Me $\overset{1}{\leftrightarrow}$ PL $\overset{2}{\leftrightarrow}$ Ps $\overset{1}{\leftrightarrow}$ BTHF $\overset{2}{\leftrightarrow}$ At $\overset{2}{\leftrightarrow}$ Ka $\overset{2}{\leftrightarrow}$ Ull $\overset{2}{\leftrightarrow}$ Wl $\overset{2}{\leftrightarrow}$ Mf	n: 30, WE: –
N7	BSPA $\overset{2}{\leftrightarrow}$ AS $\overset{1}{\leftrightarrow}$ Zi $\overset{2}{\leftrightarrow}$ Hs $\overset{2}{\leftrightarrow}$ P $\overset{2}{\leftrightarrow}$ Rm $\overset{2}{\leftrightarrow}$ Sie $\overset{5}{\leftrightarrow}$ JK $\overset{3}{\leftrightarrow}$ BJUN $\overset{2}{\leftrightarrow}$ Mp $\overset{2}{\leftrightarrow}$ Rw $\overset{2}{\leftrightarrow}$ Bmo $\overset{3}{\leftrightarrow}$ BCHS $\overset{5}{\leftrightarrow}$ Ad $\overset{3}{\leftrightarrow}$ Kn $\overset{1}{\leftrightarrow}$ Fpo $\overset{2}{\leftrightarrow}$ Bli $\overset{7}{\leftrightarrow}$ Beo $\overset{1}{\leftrightarrow}$ Bpo $\overset{1}{\leftrightarrow}$ Ei $\overset{2}{\leftrightarrow}$ Kt $\overset{2}{\leftrightarrow}$ BGGS $\overset{1}{\leftrightarrow}$ BYOR $\overset{3}{\leftrightarrow}$ Me $\overset{2}{\leftrightarrow}$ Gs $\overset{3}{\leftrightarrow}$ Sü $\overset{5}{\leftrightarrow}$ Hpo $\overset{3}{\leftrightarrow}$ Hpo $\overset{3}{\leftrightarrow}$ Rk $\overset{7}{\leftrightarrow}$ BNK $\overset{2}{\leftrightarrow}$ Gz $\overset{17}{\leftrightarrow}$ R	n: 30, WE: –
N7	R $\overset{8}{\leftrightarrow}$ BFLH $\overset{2}{\leftrightarrow}$ SXF	n: 30
N8	BWIN $\overset{3}{\leftrightarrow}$ RR $\overset{3}{\leftrightarrow}$ BKBO $\overset{2}{\leftrightarrow}$ LD $\overset{2}{\leftrightarrow}$ PB $\overset{3}{\leftrightarrow}$ RE $\overset{2}{\leftrightarrow}$ FN $\overset{4}{\leftrightarrow}$ Olo $\overset{3}{\leftrightarrow}$ Pk $\overset{2}{\leftrightarrow}$ BGB $\overset{3}{\leftrightarrow}$ Vo $\overset{1}{\leftrightarrow}$ B $\overset{2}{\leftrightarrow}$ Ro $\overset{1}{\leftrightarrow}$ W $\overset{4}{\leftrightarrow}$ BHKM $\overset{4}{\leftrightarrow}$ BJB $\overset{2}{\leftrightarrow}$ He $\overset{2}{\leftrightarrow}$ Mr $\overset{5-6}{\leftrightarrow}$ Kbo $\overset{2-3}{\leftrightarrow}$ ST $\overset{2}{\leftrightarrow}$ Hpo $\overset{1}{\leftrightarrow}$ Bo $\overset{2}{\leftrightarrow}$ L $\overset{2}{\leftrightarrow}$ BHER	n: 10-30, WE: –
N9	Olo $\overset{3}{\leftrightarrow}$ Np $\overset{5}{\leftrightarrow}$ Lpo $\overset{2}{\leftrightarrow}$ Am $\overset{2}{\leftrightarrow}$ BWF $\overset{1}{\leftrightarrow}$ Bi $\overset{1}{\leftrightarrow}$ Tm $\overset{3}{\leftrightarrow}$ BTGN $\overset{7}{\leftrightarrow}$ BZOS $\overset{2}{\leftrightarrow}$ Kfo $\overset{3}{\leftrightarrow}$ Sno $\overset{1}{\leftrightarrow}$ Gt $\overset{2}{\leftrightarrow}$ Beo $\overset{3}{\leftrightarrow}$ BBUP $\overset{2}{\leftrightarrow}$ Fw $\overset{3}{\leftrightarrow}$ Wsg $\overset{1}{\leftrightarrow}$ Slo $\overset{3}{\leftrightarrow}$ BRST	n: 15-30, WE: –
N10	BZOS $\overset{2}{\leftrightarrow}$ Kfo $\overset{1}{\leftrightarrow}$ U $\overset{5}{\leftrightarrow}$ Ad $\overset{5}{\leftrightarrow}$ BHO $\overset{13}{\leftrightarrow}$ Os $\overset{9}{\leftrightarrow}$ BZD	n: 30
N16	BNIS $\overset{4}{\leftrightarrow}$ BWSS $\overset{21}{\leftrightarrow}$ BPDH	n: 60
N20	BFOH $\overset{13}{\leftrightarrow}$ BWIN $\overset{7}{\leftrightarrow}$ PB $\overset{9}{\leftrightarrow}$ Se $\overset{4-8}{\leftrightarrow}$ Lpo $\overset{1-6}{\leftrightarrow}$ BWED $\overset{1}{\leftrightarrow}$ Ri $\overset{6}{\leftrightarrow}$ BHBF	n: 30
N22	Tg $\overset{3}{\leftrightarrow}$ BTG $\overset{8}{\leftrightarrow}$ BWAI	n: 30
N24	BWIN $\overset{9}{\leftrightarrow}$ BTG $\overset{3-8}{\leftrightarrow}$ Tg $\overset{8-13}{\leftrightarrow}$ BSZF $\overset{4}{\leftrightarrow}$ BHLS	n: 30

Linie	Fahrtweg	Takt
N79	BPWA $\overset{5}{\leftrightarrow}$ BSO $\overset{2}{\leftrightarrow}$ BNK $\overset{5}{\leftrightarrow}$ BHER $\overset{11}{\leftrightarrow}$ Mf	n: 30
N81	Wsg $\overset{1}{\leftrightarrow}$ BFB $\overset{11}{\leftrightarrow}$ BLAK $\overset{11}{\leftrightarrow}$ BMF	n: 30
N84	BTHF $\overset{2}{\leftrightarrow}$ At $\overset{8}{\leftrightarrow}$ BATS $\overset{8}{\leftrightarrow}$ BLIO $\overset{17}{\leftrightarrow}$ BZD	n: 30
N88	BRST $\overset{3}{\leftrightarrow}$ BBGT $\overset{17}{\leftrightarrow}$ BOSS $\overset{3}{\leftrightarrow}$ BLIS	n: 30

Linie	Fahrtweg	Takt
373	R $\overset{5}{\rightarrow}$ Zd $\overset{9}{\rightarrow}$ La $\overset{5}{\rightarrow}$ La $\overset{8}{\rightarrow}$ Zd $\overset{8}{\rightarrow}$ R	t: 20, So: –
377	BPWD $\overset{13}{\leftrightarrow}$ BNK $\overset{5}{\leftrightarrow}$ BHER	t: 20, f/a: 20
395	BMDF $\overset{18}{\rightarrow}$ Hö $\overset{14}{\rightarrow}$ BMDF	t: 20, f/a: 20
398	BMDF $\overset{21}{\leftrightarrow}$ E	t: 20, So: –
893	BZEP $\overset{13}{\leftrightarrow}$ BBU $\overset{33}{\leftrightarrow}$ BHH	t: 20, Sa/So: 60
N1	BWRS $\overset{3}{\leftrightarrow}$ S $\overset{4}{\leftrightarrow}$ Gr $\overset{2}{\leftrightarrow}$ Kbo $\overset{1}{\leftrightarrow}$ Pr $\overset{2}{\leftrightarrow}$ Ho $\overset{4}{\leftrightarrow}$ Mo $\overset{2}{\leftrightarrow}$ MB $\overset{3}{\leftrightarrow}$ Kus $\overset{1}{\leftrightarrow}$ BS $\overset{1}{\leftrightarrow}$ Nm $\overset{3}{\leftrightarrow}$ Wt $\overset{3}{\leftrightarrow}$ Kfo $\overset{1}{\leftrightarrow}$ BZOS	n: 15-30, WE: –
N2	Rl $\overset{5}{\leftrightarrow}$ Nd $\overset{2}{\leftrightarrow}$ Th $\overset{1}{\leftrightarrow}$ Kd $\overset{2}{\leftrightarrow}$ So $\overset{3}{\leftrightarrow}$ Bmo $\overset{2}{\leftrightarrow}$ Obi $\overset{2}{\leftrightarrow}$ RP $\overset{9}{\leftrightarrow}$ BZOS $\overset{2}{\leftrightarrow}$ Kfo $\overset{3}{\leftrightarrow}$ Wt $\overset{3}{\leftrightarrow}$ Nm $\overset{1}{\leftrightarrow}$ BS $\overset{1}{\leftrightarrow}$ Kus $\overset{5}{\leftrightarrow}$ BPOP $\overset{2}{\leftrightarrow}$ Mic $\overset{3}{\leftrightarrow}$ Sp $\overset{2}{\leftrightarrow}$ RHO $\overset{2-7}{\leftrightarrow}$ BHKM $\overset{2-7}{\leftrightarrow}$ W $\overset{3}{\leftrightarrow}$ Lu $\overset{1}{\leftrightarrow}$ Sz $\overset{3}{\leftrightarrow}$ EB $\overset{3}{\leftrightarrow}$ BSAL $\overset{3}{\leftrightarrow}$ VIN $\overset{3}{\leftrightarrow}$ BPKW	n: 15-30, WE: –
N3	Wt $\overset{3}{\leftrightarrow}$ Kfo $\overset{3}{\leftrightarrow}$ Sno $\overset{1}{\leftrightarrow}$ Hz $\overset{2}{\leftrightarrow}$ Fpo $\overset{2}{\leftrightarrow}$ BHO $\overset{2}{\leftrightarrow}$ BHEI $\overset{5}{\leftrightarrow}$ Bt $\overset{4}{\leftrightarrow}$ DD $\overset{2}{\leftrightarrow}$ T $\overset{4}{\leftrightarrow}$ Os $\overset{4}{\leftrightarrow}$ K $\overset{2}{\leftrightarrow}$ BMEX	n: 30, WE: –
N5	BHKM $\overset{4}{\leftrightarrow}$ BALX $\overset{2}{\leftrightarrow}$ Si $\overset{2}{\leftrightarrow}$ Sr $\overset{2}{\leftrightarrow}$ WR $\overset{2}{\leftrightarrow}$ Ft $\overset{2}{\leftrightarrow}$ Sa $\overset{2}{\leftrightarrow}$ BFA $\overset{2}{\leftrightarrow}$ Md $\overset{13}{\leftrightarrow}$ BWT $\overset{4}{\leftrightarrow}$ KL $\overset{2}{\leftrightarrow}$ GK $\overset{2}{\leftrightarrow}$ C $\overset{2}{\leftrightarrow}$ Hd $\overset{4}{\leftrightarrow}$ LL $\overset{1}{\leftrightarrow}$ Hö	n: 15-30, WE: –

Linie	Fahrtweg	Takt
N25	BTG $\overset{2}{\leftrightarrow}$ Tg $\overset{10}{\leftrightarrow}$ BHED	n: 30
N26	Se $\overset{7}{\leftrightarrow}$ BBEU $\overset{8}{\leftrightarrow}$ Ha $\overset{5}{\leftrightarrow}$ Nm $\overset{3}{\leftrightarrow}$ Wt $\overset{3}{\leftrightarrow}$ Kfo $\overset{1}{\leftrightarrow}$ BZOS	n: 30
N33	Tg $\overset{3}{\leftrightarrow}$ BTG $\overset{4}{\leftrightarrow}$ Hh $\overset{20}{\leftrightarrow}$ Hs	n: 30
N39	Rm $\overset{2}{\leftrightarrow}$ P	n: 30
N40	Tm $\overset{7}{\leftrightarrow}$ BHBF $\overset{3}{\leftrightarrow}$ NA $\overset{1}{\leftrightarrow}$ BNB $\overset{3}{\leftrightarrow}$ Ro $\overset{1}{\leftrightarrow}$ W $\overset{3}{\leftrightarrow}$ BHKM $\overset{3}{\leftrightarrow}$ BJB $\overset{4}{\leftrightarrow}$ BOSB	n: 30
N42	Th $\overset{5}{\leftrightarrow}$ BHAL $\overset{8}{\leftrightarrow}$ Fpo $\overset{2}{\leftrightarrow}$ Bli $\overset{2}{\leftrightarrow}$ Beo $\overset{7}{\leftrightarrow}$ BJLB $\overset{4}{\leftrightarrow}$ PL $\overset{2-6}{\leftrightarrow}$ Me $\overset{2-6}{\leftrightarrow}$ Ho $\overset{6}{\leftrightarrow}$ Sp $\overset{4}{\leftrightarrow}$ BHKM $\overset{2}{\leftrightarrow}$ W $\overset{2}{\leftrightarrow}$ BALX	n: 30
N50	Tk $\overset{5}{\leftrightarrow}$ Fi $\overset{2}{\leftrightarrow}$ BLI $\overset{3}{\leftrightarrow}$ Md $\overset{36}{\leftrightarrow}$ BPKW $\overset{4}{\leftrightarrow}$ BPHD	n: 30
N52	Olo $\overset{5}{\leftrightarrow}$ BSNH	n: 30
N56	Md $\overset{23}{\rightarrow}$ BHH $\overset{3}{\rightarrow}$ BWAB $\overset{7}{\rightarrow}$ BGSE $\overset{16}{\rightarrow}$ Md	n: 30
N60	BADL $\overset{21}{\leftrightarrow}$ BFLH $\overset{2}{\leftrightarrow}$ SXF	n: 30
N61	BFRH $\overset{12}{\leftrightarrow}$ BRD (nur am WE) $\overset{8}{\leftrightarrow}$ BWIG	n: 30
N65	BHKM $\overset{4}{\leftrightarrow}$ BJB $\overset{1}{\leftrightarrow}$ He $\overset{5}{\leftrightarrow}$ S $\overset{6}{\leftrightarrow}$ BTP $\overset{3}{\leftrightarrow}$ BPWA $\overset{12}{\leftrightarrow}$ BSW $\overset{3}{\leftrightarrow}$ BADL $\overset{4}{\leftrightarrow}$ BSPF	n: 30
N67	BSW $\overset{21}{\leftrightarrow}$ BFRH	n: 30
N68	BADL $\overset{4}{\leftrightarrow}$ BGAS	n: 30
N69	BWT $\overset{4}{\leftrightarrow}$ E $\overset{16}{\leftrightarrow}$ BKPK	n: 15-30

Linie	Fahrtweg	Takt
N90	BWT $\overset{6}{\leftrightarrow}$ BMDF $\overset{15}{\leftrightarrow}$ BKPK	n: 30
N91	BWT $\overset{5}{\leftrightarrow}$ KL	n: 30
N94	Hpo $\overset{3}{\leftrightarrow}$ Rk $\overset{10}{\leftrightarrow}$ BTP $\overset{3}{\leftrightarrow}$ BOK $\overset{1}{\leftrightarrow}$ BRH $\overset{1}{\leftrightarrow}$ BNPL $\overset{4}{\leftrightarrow}$ BLI $\overset{4}{\leftrightarrow}$ Md	n: 30
N95	BWT $\overset{2}{\leftrightarrow}$ BKAD $\overset{5}{\leftrightarrow}$ BMDF	n: 30