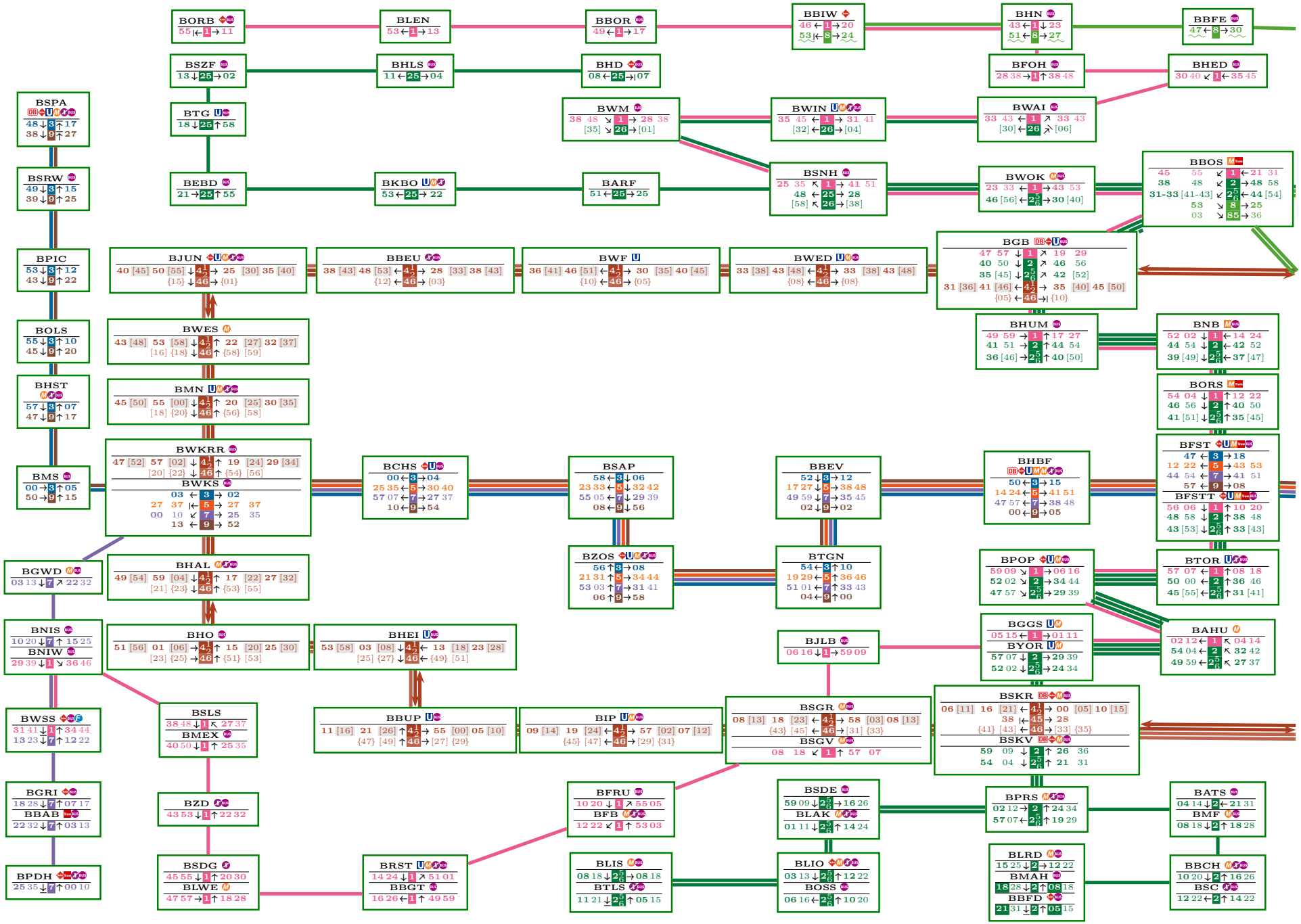
BORB
55 ← 1 → 11
BLEN
53 ← 1 → 13
BBOR
49 ← 1 → 17
BBIW
46 ← 1 → 20
53 ← 8 → 24
BHN
43 ← 1 ↓ 23
51 ← 8 → 27
BBFE
47 ← 8 → 30
BSZF
13 ↓ 25 → 02
BHLS
11 ← 25 → 04
BHD
08 ← 25 → 07
BFOH
28 38 → 1 ↑ 38 48
BHED
30 40 ↙ 1 ← 35 45
BSPA
48 ↓ 3 ↑ 17
38 ↓ 9 ↑ 27
BTG
18 ↓ 25 ↑ 58
BWM
38 48 ↘ 1 → 28 38
[35] ↘ 26 → [01]
BWIN
35 45 ← 1 → 31 41
[32] ← 26 → [04]
BWAI
33 43 ← 1 ↗ 33 43
[30] ← 26 ↗ [06]
BSRW
49 ↓ 3 ↑ 15
39 ↓ 9 ↑ 25
BEBD
21 → 25 ↑ 55
BKBO
53 ← 25 → 22
BARF
51 ← 25 → 25
BSNH
25 35 ↖ 1 → 41 51
48 ← 25 → 28
[58] ↖ 26 → [38]
BWOK
23 33 ← 1 → 43 53
46 [56] ← 2 5/6 → 30 [40]
BBOS
45 55 ↙ 1 ← 21 31
38 48 ↙ 2 → 48 58
31-33 [41-43] ↙ 2 5/6 ← 44 [54]
53 ↘ 8 → 25
03 ↘ 35 → 36
BPIC
53 ↓ 3 ↑ 12
43 ↓ 9 ↑ 22
BJUN
40 [45] 50 [55] ↓ 4 1/2 → 25 [30] 35 [40]
{15} ↓ 46 → {01}
BBEU
38 [43] 48 [53] ← 4 1/2 → 28 [33] 38 [43]
{12} ← 46 → {03}
BWF
36 [41] 46 [51] ← 4 1/2 → 30 [35] 40 [45]
{10} ← 46 → {05}
BWED
33 [38] 43 [48] ← 4 1/2 → 33 [38] 43 [48]
{08} ← 46 → {08}
BGB
47 57 ↓ 1 ↗ 19 29
40 50 ↓ 2 ↗ 46 56
35 [45] ↓ 2 5/6 ↗ 42 [52]
31 [36] 41 [46] ← 4 1/2 → 35 [40] 45 [50]
{05} ← 46 → {10}
BOLS
55 ↓ 3 ↑ 10
45 ↓ 9 ↑ 20
BWES
43 [48] 53 [58] ↓ 4 1/2 ↑ 22 [27] 32 [37]
[16] {18} ↓ 46 ↑ {58} [59]
BHUM
49 59 → 1 ↑ 17 27
41 51 → 2 ↑ 44 54
36 [46] → 2 5/6 ↑ 40 [50]
BNB
52 02 ↓ 1 ← 14 24
44 54 ↓ 2 ← 42 52
39 [49] ↓ 2 5/6 ← 37 [47]
BHST
57 ↓ 3 ↑ 07
47 ↓ 9 ↑ 17
BMN
45 [50] 55 [00] ↓ 4 1/2 ↑ 20 [25] 30 [35]
[18] {20} ↓ 46 ↑ {56} [58]
BORS
54 04 ↓ 1 ↑ 12 22
46 56 ↓ 2 ↑ 40 50
41 [51] ↓ 2 5/6 ↑ 35 [45]
BMS
00 → 3 ↑ 05
50 → 9 ↑ 15
BWKRR
47 [52] 57 [02] ↓ 4 1/2 ↑ 19 [24] 29 [34]
[20] {22} ↓ 46 ↑ {54} [56]
BWKS
03 ← 3 → 02
27 37 |← 5 → 27 37
00 10 ↙ 7 → 25 35
13 ← 9 → 52
BCHS
00 ← 3 → 04
25 35 ← 5 → 30 40
57 07 ← 7 → 27 37
10 ← 9 → 54
BSAP
58 ← 3 ↓ 06
23 33 ← 5 ↓ 32 42
55 05 ← 7 ↓ 29 39
08 ← 9 ↓ 56
BBEV
52 ↓ 3 → 12
17 27 ↓ 5 → 38 48
49 59 ↓ 7 → 35 45
02 ↓ 9 → 02
BHBF
50 ← 3 → 15
14 24 ← 5 → 41 51
47 57 ← 7 → 38 48
00 ← 9 → 05
BFST
47 ← 3 → 18
12 22 ← 5 → 43 53
44 54 ← 7 → 41 51
57 ← 9 → 08
BFSTT
56 06 ↓ 1 ↑ 10 20
48 58 ↓ 2 ↑ 38 48
43 [53] ↓ 2 5/6 ↑ 33 [43]
BGWD
03 13 ↓ 7 ↗ 22 32
BHAL
49 [54] 59 [04] ↓ 4 1/2 ↑ 17 [22] 27 [32]
[21] {23} ↓ 46 ↑ {53} [55]
BZOS
56 ↑ 3 → 08
21 31 ↑ 5 → 34 44
53 03 ↑ 7 → 31 41
06 ↑ 9 → 58
BTGN
54 ← 3 ↑ 10
19 29 ← 5 ↑ 36 46
51 01 ← 7 ↑ 33 43
04 ← 9 ↑ 00
BPOP
59 09 ↘ 1 → 06 16
52 02 ↘ 2 → 34 44
47 57 ↘ 2 5/6 → 29 39
BTOR
57 07 ← 1 ↑ 08 18
50 00 ← 2 ↑ 36 46
45 [55] ← 2 5/6 ↑ 31 [41]
BNIS
10 20 ↓ 7 ↑ 15 25
BNIW
29 39 ↓ 1 ↘ 36 46
BHO
51 [56] 01 [06] → 4 1/2 ↑ 15 [20] 25 [30]
[23] {25} → 46 ↑ {51} [53]
BHEI
53 [58] 03 [08] ↓ 4 1/2 ← 13 [18] 23 [28]
[25] {27} ↓ 46 ← {49} [51]
BJLB
06 16 ↓ 1 → 59 09
BGGS
05 15 ← 1 → 01 11
BYOR
57 07 ↓ 2 → 29 39
52 02 ↓ 2 5/6 → 24 34
BAHU
02 12 ← 1 ↖ 04 14
54 04 ← 2 ↖ 32 42
49 59 ← 2 5/6 ↖ 27 37
BWSS
31 41 ↓ 1 ↑ 34 44
13 23 ↓ 7 ↑ 12 22
BSLS
38 48 ↓ 1 ↖ 27 37
BMEX
40 50 ↓ 1 ↑ 25 35
BBUP
11 [16] 21 [26] ↑ 4 1/2 → 55 [00] 05 [10]
{47} [49] ↑ 46 → [27] {29}
BIP
09 [14] 19 [24] ← 4 1/2 → 57 [02] 07 [12]
{45} [47] ← 46 → [29] {31}
BSGR
08 [13] 18 [23] ← 4 1/2 → 58 [03] 08 [13]
{43} [45] ← 46 → [31] {33}
BSGV
08 18 ↙ 1 ↑ 57 07
BSKR
06 [11] 16 [21] ← 4 1/2 → 00 [05] 10 [15]
38 |← 45 → 28
{41} [43] ← 46 → [33] {35}
BSKV
59 09 ↓ 2 ↑ 26 36
54 04 ↓ 2 5/6 ↑ 21 31
BGRI
18 28 ↓ 7 ↑ 07 17
BBAB
22 32 ↓ 7 ↑ 03 13
BZD
43 53 ↓ 1 ↑ 22 32
BFRU
10 20 ↓ 1 ↗ 55 05
BFB
12 22 ↙ 1 ↑ 53 03
BSDE
59 09 ↓ 2 5/6 → 16 26
BLAK
01 11 ↓ 2 5/6 ↑ 14 24
BPRS
02 12 → 2 ↑ 24 34
57 07 ← 2 5/6 ↑ 19 29
BATS
04 14 ↓ 2 ← 21 31
BMF
08 18 ↓ 2 ↑ 18 28
BPDH
25 35 ↓ 7 ↑ 00 10
BSDG
45 55 ↓ 1 ↑ 20 30
BLWE
47 57 → 1 ↑ 18 28
BRST
14 24 ↓ 1 ↗ 51 01
BBGT
16 26 ← 1 ↑ 49 59
BLIS
08 18 ↓ 2 5/6 → 08 18
BTLS
11 21 ↓ 2 5/6 ↑ 05 15
BLIO
03 13 ↓ 2 5/6 ↑ 12 22
BOSS
06 16 ← 2 5/6 ↑ 10 20
BLRD
15 25 ↓ 2 → 12 22
BMAH
18 28 ↓ 2 ↑ 08 18
BBFD
21 31 ↓ 2 ↑ 05 15
BBCH
10 20 ↓ 2 ↑ 16 26
BSC
12 22 ← 2 ↑ 14 22

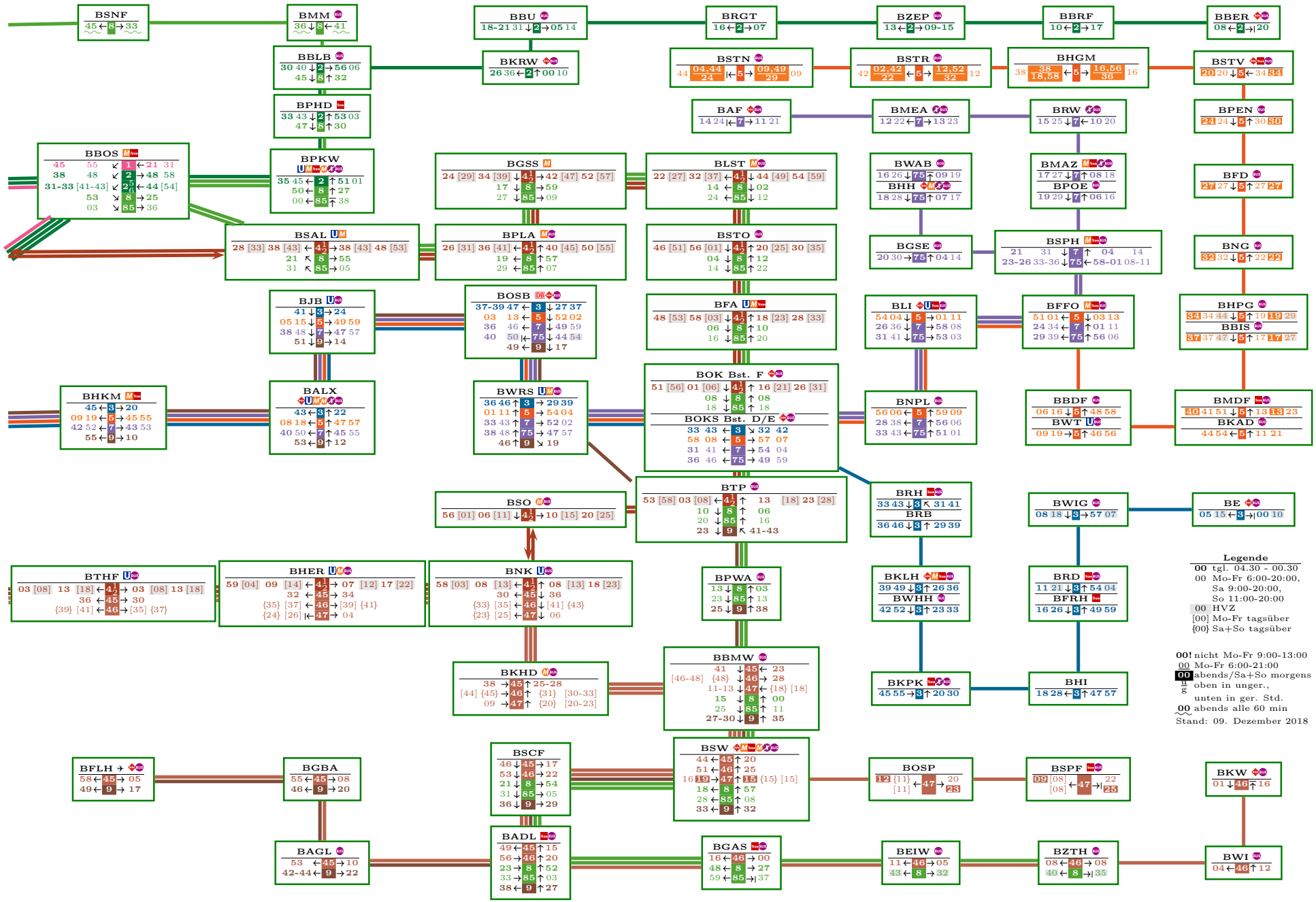
BSNF
45 ← 8 → 33
BMM
36 ↓ 8 ← 41
BBU
18-21 31 ↓ 2 → 05 14
BRGT
16 ← 2 → 07
BZEP
13 ← 2 → 09-15
BBRF
10 ← 2 → 17
BBER
08 ← 2 →| 20
BBLB
30 40 ↓ 2 → 56 06
45 ↓ 8 ↑ 32
BKRW
26 36 ← 2 ↑ 00 10
BSTN
44 04,44 24 |← 5 → 09,49 29 09
BSTR
42 02,42 22 ← 5 → 12,52 32 12
BHGM
38 38 18,58 ← 5 → 16,56 36 16
BSTV
20 20 ↓ 5 ← 34 34
BPHD
33 43 ↓ 2 ↑ 53 03
47 ↓ 8 ↑ 30
BAF
14 24 |← 7 → 11 21
BMEA
12 22 ← 7 → 13 23
BRW
15 25 ↓ 7 ← 10 20
BPEN
24 24 ↓ 5 ↑ 30 30
BBOS
45 55 ↙ 1 ← 21 31
38 48 ↙ 2 → 48 58
31-33 [41-43] ↙ 2 5/6 ← 44 [54]
53 ↘ 8 → 25
03 ↘ 85 → 36
BPKW
35 45 ← 2 ↑ 51 01
50 ← 8 ↑ 27
00 ← 85 ↑ 38
BGSS
24 [29] 34 [39] ↓ 4½ → 42 [47] 52 [57]
17 ↓ 8 → 59
27 ↓ 85 → 09
BLST
22 [27] 32 [37] ← 4½ ↓ 44 [49] 54 [59]
14 ← 8 ↓ 02
24 ← 85 ↓ 12
BWAB
16 26 ↓ 75 ↑ 09 19
BHH
18 28 ↓ 75 ↑ 07 17
BMAZ
17 27 ↓ 7 ↑ 08 18
BPOE
19 29 ↓ 7 ↑ 06 16
BFD
27 27 ↓ 5 ↑ 27 27
BSAL
28 [33] 38 [43] ← 4½ → 38 [43] 48 [53]
21 ↖ 8 → 55
31 ↖ 85 → 05
BPLA
26 [31] 36 [41] ← 4½ ↑ 40 [45] 50 [55]
19 ← 8 ↑ 57
29 ← 85 ↑ 07
BSTO
46 [51] 56 [01] ↓ 4½ ↑ 20 [25] 30 [35]
04 ↓ 8 ↑ 12
14 ↓ 85 ↑ 22
BGSE
20 30 → 75 ↑ 04 14
BSPH
21 31 ↓ 7 ↑ 04 14
23-26 33-36 ↓ 75 ← 58-01 08-11
BNG
32 32 ↓ 5 ↑ 22 22
BJB
41 ↓ 3 → 24
05 15 ↓ 5 → 49 59
38 48 ↓ 7 → 47 57
51 ↓ 9 → 14
BOSB
37-39 47 ← 3 ↓ 27 37
03 13 ← 5 ↓ 52 02
36 46 ← 7 ↓ 49 59
40 50 |← 75 ↓ 44 54
49 ← 9 ↓ 17
BFA
48 [53] 58 [03] ↓ 4½ ↑ 18 [23] 28 [33]
06 ↓ 8 ↑ 10
16 ↓ 85 ↑ 20
BLI
54 04 ↓ 5 → 01 11
26 36 ↓ 7 → 58 08
31 41 ↓ 75 → 53 03
BFFO
51 01 ← 5 ↑ 03 13
24 34 ← 7 ↑ 01 11
29 39 ← 75 ↑ 56 06
BHPG
34 34 44 ↓ 5 ↑ 19 19 29
BBIS
37 37 47 ↓ 5 ↑ 17 17 27
BHKM
45 ← 3 → 20
09 19 ← 5 → 45 55
42 52 ← 7 → 43 53
55 ← 9 → 10
BALX
43 ← 3 ↑ 22
08 18 ← 5 ↑ 47 57
40 50 ← 7 ↑ 45 55
53 ← 9 ↑ 12
BWRS
36 46 ↑ 3 → 29 39
01 11 ↑ 5 → 54 04
33 43 ↑ 7 → 52 02
38 48 ↑ 75 → 47 57
46 ↑ 9 ↘ 19
BOK Bst. F
51 [56] 01 [06] ↓ 4½ ↑ 16 [21] 26 [31]
08 ↓ 8 ↑ 08
18 ↓ 85 ↑ 18
BOKS Bst. D/E
33 43 ← 3 ↘ 32 42
58 08 ← 5 → 57 07
31 41 ← 7 → 54 04
36 46 ← 75 → 49 59
BNPL
56 06 ← 5 ↑ 59 09
28 38 ← 7 ↑ 56 06
33 43 ← 75 ↑ 51 01
BBDF
06 16 ↓ 5 ↑ 48 58
BWT
09 19 → 5 ↑ 46 56
BMDF
40 41 51 ↓ 5 ↑ 13 13 23
BKAD
44 54 ← 5 ↑ 11 21
BTP
53 [58] 03 [08] ← 4½ ↑ 13 [18] 23 [28]
10 ↓ 8 ↑ 06
20 ↓ 85 ↑ 16
23 ↓ 9 ↖ 41-43
BSO
56 [01] 06 [11] ↓ 4½ → 10 [15] 20 [25]
BRH
33 43 ↓ 3 ↖ 31 41
BRB
36 46 ↓ 3 ↑ 29 39
BWIG
08 18 ↓ 3 → 57 07
BE
05 15 ← 3 →| 00 10
BTHF
03 [08] 13 [18] ← 4½ → 03 [08] 13 [18]
36 ← 45 → 30
{39} [41] ← 46 → [35] {37}
BHER
59 [04] 09 [14] ← 4½ → 07 [12] 17 [22]
32 ← 45 → 34
{35} [37] ← 46 → [39] {41}
{24} [26] |← 47 → 04
BNK
58 [03] 08 [13] ← 4½ ↑ 08 [13] 18 [23]
30 ← 45 ↓ 36
{33} [35] ← 46 ↓ [41] {43}
{23} [25] ← 47 ↓ 06
BPWA
13 ↓ 8 ↑ 03
23 ↓ 85 ↑ 13
25 ↓ 9 ↑ 38
BKLH
39 49 ↓ 3 ↑ 26 36
BWHH
42 52 ↓ 3 ↑ 23 33
BRD
11 21 ↓ 3 ↑ 54 04
BFRH
16 26 ↓ 3 ↑ 49 59
Legende
00 tgl. 04.30 - 00.30
00 Mo-Fr 6:00-20:00, Sa 9:00-20:00, So 11:00-20:00
00 HVZ
[00] Mo-Fr tagsüber
{00} Sa+So tagsüber
00! nicht Mo-Fr 9:00-13:00
00 Mo-Fr 6:00-21:00
00 abends/Sa+So morgens
u oben in unger.,
g unten in ger. Std.
00 abends alle 60 min
Stand: 09. Dezember 2018
BBMW
41 ↓ 45 ← 23
[46-48] {48} ↓ 46 → 28
11-13 ↓ 47 ← {18} [18]
15 ↓ 8 ↑ 00
25 ↓ 85 ↑ 11
27-30 ↓ 9 ↑ 35
BKHD
38 → 45 ↑ 25-28
[44] {45} → 46 ↑ {31} [30-33]
09 → 47 ↑ {20} [20-23]
BKPK
45 55 → 3 ↑ 20 30
BHI
18 28 ← 3 ↑ 47 57
BFLH
58 ← 45 → 05
49 ← 9 → 17
BGBA
55 ← 45 → 08
46 ← 9 → 20
BSCF
46 ↓ 45 → 17
53 ↓ 46 → 22
21 ↓ 8 → 54
31 ↓ 85 → 05
36 ↓ 9 → 29
BSW
44 ← 45 ↑ 20
51 ← 46 ↑ 25
16 19 → 47 ↑ 15 {15} [15]
18 ← 8 ↑ 57
28 ← 85 ↑ 08
33 ← 9 ↑ 32
BOSP
12 {11} [11] ← 47 → 20 23
BSPF
09 [08] [08] ← 47 →| 22 25
BKW
01 ↓ 46 ↑ 16
BAGL
53 ← 45 → 10
42-44 ← 9 → 22
BADL
49 ← 45 ↑ 15
56 → 46 ↑ 20
23 → 8 ↑ 52
33 → 85 ↑ 03
38 ← 9 ↑ 27
BGAS
16 ← 46 → 00
48 ← 8 → 27
59 ← 85 →| 37
BEIW
11 ← 46 → 05
43 ← 8 → 32
BZTH
08 ← 46 → 08
40 ← 8 →| 35
BWI
04 ← 46 ↑ 12

S1 P (Mo-Fr)								
BWSS	00:14	00:34	00:54			04:14	20	23:54
BZD	00:23	00:43	01:03		04:03	04:23		00:03
BSGV	00:37	00:57	01:17	03:57	04:17	04:37		00:17
BPOP	00:46	01:06	01:26	04:06	04:26	04:46		00:26
BGB	00:59	01:19	01:38	04:19	04:39	04:59		00:39
BSNH	01:05	01:24		04:25	04:45	05:05		00:45
BFOH	01:18			04:38	04:58	05:18		00:58
BORB				04:55	05:15	05:35		01:15

S1 P (Sa)						
BWSS	00:14	00:34	NV	04:54	20	23:54
BZD	00:23	00:43		05:03		00:03
BSGV	00:37	00:57		05:17		00:17
BPOP	00:46	01:06		05:26		00:26
BGB	00:59	01:19		05:39		00:39
BSNH	01:05	01:25		05:45		00:45
BFOH	01:18	01:38		05:58		00:58
BORB	01:35	01:55		06:15		01:15

S1 P (So)						
BWSS	00:14	00:34	NV	06:54	20	23:54
BZD	00:23	00:43		07:03		00:03
BSGV	00:37	00:57		07:17		00:17
BPOP	00:46	01:06		07:26		00:26
BGB	00:59	01:19		07:39		00:39
BSNH	01:05	01:25		07:45		00:45
BFOH	01:18	01:38		07:58		00:58
BORB	01:35	01:55		08:15		01:15

S1 P (Mo-Fr)								
BORB	00:11	00:31				04:11	20	23:51
BFOH	00:28	00:48			04:08	04:28		00:08
BSNH	00:41	01:01			04:21	04:41		00:21
BGB	00:47	01:07		04:07	04:27	04:47		00:27
BPOP	00:59	01:19	03:59	04:19	04:39	04:59		00:39
BSGV	01:12	01:28	04:08	04:28	04:48	05:08		00:48
BZD	01:26		04:22	04:42	05:02	05:22		01:02
BWSS			04:31	04:51	05:11	05:31		01:11

S1 P (Sa)								
BORB	00:11	00:31	NV		04:41	05:11	20	23:51
BFOH	00:28	00:48			04:58	05:28		00:08
BSNH	00:41	01:01			05:11	05:41		00:21
BGB	00:47	01:07		05:07	05:23	05:47		00:27
BPOP	00:59	01:19		05:19	05:39	05:59		00:39
BSGV				05:28	05:48	06:08		00:48
BZD				05:42	06:02	06:22		01:02
BWSS				05:51	06:11	06:31		01:11

S1 P (So)								
BORB	00:11	00:31	NV		06:41	07:11	20	23:51
BFOH	00:28	00:48			06:58	07:28		00:08
BSNH	00:41	01:01			07:11	07:41		00:21
BGB	00:47	01:07		07:07	07:23	07:47		00:27
BPOP	00:59	01:19		07:19	07:39	07:59		00:39
BSGV				07:28	07:48	08:08		00:48
BZD				07:42	08:02	08:22		01:02
BWSS				07:51	08:11	08:31		01:11

S1 PI (Mo-Fr)				
BWSS		05:24	20	21:04
BZD	05:13	05:33		21:13
BPOP	05:36	05:56		21:36
BGB	05:49	06:09		21:49
BWAI	06:03	06:23		22:03
BFOH	06:08	06:28		22:08

S1 PI (abends)					
BWSS	21:24				
BZD	21:33	21:53	22:13	20	23:13
BPOP	21:56	22:16	22:36		23:36
BGB	22:09	22:29	22:48		23:48
BWAI	22:23	22:43			
BFOH					

S1 PI (abends,Fr-Sa)						
BWSS	21:24					
BZD	21:33	20	22:13	20	22:53	23:13
BPOP	21:56		22:36		23:16	23:36
BGB	22:09		22:49		23:29	23:48
BWAI	22:23		23:03		23:43	
BFOH	22:28		23:08			

S1 PI (Sa)				
BWSS		08:04	20	21:04
BZD	07:53	08:13		21:13
BPOP	08:16	08:36		21:36
BGB	08:29	08:49		21:49
BWAI	08:43	09:03		22:03
BFOH	08:48	09:08		22:08

S1 PI (So)				
BWSS		09:44	20	21:04
BZD	09:33	09:53		21:13
BPOP	09:56	10:16		21:36
BGB	10:09	10:29		21:49
BWAI	10:23	10:43		22:03
BFOH	10:28	10:48		22:08

S1 PI (Mo-Fr)						
BFOH				05:38	20	19:58
BWAI		05:03	20	05:43		20:03
BGB		05:17		05:57		20:17
BPOP	05:09	05:29		06:09		20:29
BZD	05:32	05:52		06:32		20:52
BWSS	05:41	06:01		06:41		21:01

S1 PI (abends)								
BFOH	20	21:38						
BWAI		21:43						
BGB		21:57	20	22:37	20	23:17	20	23:57
BPOP		22:09		22:49		23:29		00:09
BZD		22:32		23:12		23:52		
BWSS				23:21		00:01		

S1 PI (abends,Fr-Sa)						
BFOH	20	22:18	22:38			
BWAI		22:23	22:43			
BGB		22:37	22:57	23:17	20	23:57
BPOP		22:49	23:09	23:29		00:09
BZD		23:12	23:32	23:52		
BWSS		23:21	23:41	00:01		

S1 PI (Sa)						
BFOH				08:18	20	19:58
BWAI		07:43	20	08:23		20:03
BGB		07:57		08:37		20:17
BPOP	07:49	08:09		08:49		20:29
BZD	08:12	08:32		09:12		20:52
BWSS	08:21	08:41		09:21		21:01

S1 PI (So)						
BFOH				09:58	20	19:58
BWAI		09:23	20	10:03		20:03
BGB		09:37		10:17		20:17
BPOP	09:29	09:49		10:29		20:29
BZD	09:52	10:12		10:52		20:52
BWSS	10:01	10:21		11:01		21:01

S2 W (Mo-Fr)																	
BBFD	00:05	00:25				04:05	20	05:25	05:44		21:45	20	22:25	22:45	23:05	23:25	23:45
BLRD	00:11	00:31				04:11		05:31	05:51	20	21:51		22:31	22:51	23:11	23:31	23:51
BSKV	00:26	00:46			04:06	04:26		05:46	06:06		22:06		22:46	23:06	23:26	23:46	00:06
BAHU	00:32	00:52			04:12	04:32		05:52	06:12		22:12		22:52	23:12	23:32	23:52	00:12
BPOP	00:34	00:53	00:54		04:14	04:34		05:54	06:14		22:14		22:54	23:14	23:34	23:54	00:14
BGB	00:46		01:06	04:06	04:26	04:46		06:06	06:26		22:26		23:06	23:26	23:46	00:06	00:26
BBU	01:07		01:25	04:25	04:45	05:05		06:25	06:45		22:45		23:25	23:45	00:05	00:25	00:45
BBER	01:17			04:40	05:00	05:20		06:40	07:00		23:00		23:40	00:00	00:20	00:40	01:00

S2 W (Fr)					
BBFD				23:25	23:45
BLRD	21:51	20	22:31	23:31	23:51
BSKV	22:06		22:46	23:46	00:06
BAHU	22:12		22:52	23:52	00:12
BPOP	22:14		22:54	23:54	00:14
BGB	22:26		23:06	00:06	00:26
BBU	22:44		23:24	00:24	00:48
BBER	23:00		23:40	00:35	00:59

S2 W (Sa)													
BBFD	00:05	00:25	NV	04:45	20	08:05	08:24		22:45	23:05	23:25	23:45
BLRD	00:11	00:31		04:51		08:11	08:31	20	22:51	23:11	23:31	23:51
BSKV	00:26	00:46		05:06		08:26	08:46		23:06	23:26	23:46	00:06
BAHU	00:32	00:52		05:12		08:32	08:52		23:12	23:32	23:52	00:12
BPOP	00:34	00:54		05:14		08:34	08:54		23:14	23:34	23:54	00:14
BGB	00:56	01:06		05:26		08:46	09:06		23:26	23:46	00:06	00:26
BBU	01:15			05:45		09:05	09:25		23:45	00:05	00:25	00:49
BBER	01:25			06:00		09:20	09:40		00:00	00:20	00:35	00:59

S2 W (So)														
BBFD	00:05	00:25	NV	06:45	20	09:45	10:04		21:45	20	23:05	23:25	23:45
BLRD	00:11	00:31		06:51		09:51	10:11	20	21:51		23:11	23:31	23:51
BSKV	00:26	00:46		07:06		10:06	10:26		22:06		23:26	23:46	00:06
BAHU	00:32	00:52		07:12		10:12	10:32		22:12		23:32	23:52	00:12
BPOP	00:34	00:54		07:14		10:14	10:34		22:14		23:34	23:54	00:14
BGB	00:56	01:06		07:26		10:26	10:46		22:26		23:46	00:06	00:26
BBU	01:15			07:45		10:45	11:05		22:45		00:05	00:25	00:45
BBER	01:25			08:00		11:00	11:20		23:00		00:20	00:40	01:00

S2 W (Mo-Fr)																	
BBER		00:08	00:28	00:48		04:08	04:28	20	20:08	20:28	20:48	21:08	21:28	21:48	20	23:28	23:48
BBU		00:21	00:41	01:01		04:21	04:41		20:21	20:41	21:01	21:21	21:41	22:01		23:41	00:01
BGB		00:40	01:00	01:20		04:40	05:00		20:40	21:00	21:20	21:40	22:00	22:20		00:00	00:20
BNB	00:24	00:44	01:04	01:24		04:44	05:04		20:44	21:04	21:24	21:44	22:04	22:24		00:04	00:24
BPOP	00:32	00:52	01:12	01:31	04:32	04:52	05:12		20:52	21:12	21:32	21:52	22:12	22:32		00:12	00:32
BSKV	00:39	00:59	01:19		04:39	04:59	05:19		20:59	21:19	21:39	21:59	22:19	22:39		00:19	00:39
BLRD	00:55	01:15			04:55	05:15	05:35		21:15	21:34	21:55	22:15	22:35	22:55		00:35	00:55
BBFD	01:01	01:21			05:01	05:21	05:41			21:41	22:01	22:21	22:41	23:01		00:41	01:01

S2 W (Fr)					
BBER	20:28	20:48	21:08	21:28	23:48
BBU	20:41	21:01	21:21	21:41	00:01
BGB	21:00	21:20	21:40	22:00	00:20
BNB	21:04	21:24	21:44	22:04	00:24
BPOP	21:12	21:32	21:52	22:12	00:32
BSKV	21:19	21:39	21:59	22:19	00:39
BLRD	21:35	21:55	22:15	22:34	00:57
BBFD				22:41	01:03

S2 W (Sa)																									
BBER	00:08	00:35	NV	03:33	04:03		04:33	05:03	05:28	20	07:08	07:28	07:48	08:08	20	20:08	20:28	20:48	21:08	21:28	21:48	22:08	22:28	20	23:28	23:48
BBU	00:20	00:46		03:43	04:21		04:53	05:21	05:41		07:21	07:41	08:01	08:21		20:21	20:41	21:01	21:21	21:41	22:01	22:21	22:41		23:41	00:01
BGB	00:37	01:04		04:07	04:40	05:00	05:17	05:40	06:00		07:40	08:00	08:20	08:40		20:40	21:00	21:20	21:40	22:00	22:20	22:40	23:00		00:00	00:20
BNB	00:42	01:09		04:12	04:44	05:04	05:24	05:44	06:04		07:44	08:04	08:24	08:44		20:44	21:04	21:24	21:44	22:04	22:24	22:44	23:04		00:04	00:24
BPOP	00:54	01:24		04:22	04:52	05:12	05:32	05:52	06:12		07:52	08:12	08:32	08:52		20:52	21:12	21:32	21:52	22:12	22:32	22:52	23:12		00:12	00:32
BSKV	01:02	01:32		04:30	04:59	05:19	05:39	05:59	06:19		07:59	08:19	08:39	08:59		20:59	21:19	21:39	21:59	22:19	22:39	22:59	23:19		00:19	00:39
BLRD	01:16	01:46		04:44	05:15	05:35	05:55	06:15	06:35		08:15	08:35	08:55	09:16		21:16	21:35	21:55	22:15	22:34	22:55	23:15	23:35		00:35	00:57
BBFD	01:23	01:53		04:51	05:21	05:41	06:01	06:21	06:41		08:21									22:41	23:01	23:21	23:41		00:41	01:03

S2 W (So)																					
BBER	00:08	00:35	NV	05:33	06:03		06:33	07:03	07:28	20	08:48	20	09:48	10:08	20	19:48	20:08	20:28	20:48	20	23:28	23:48
BBU	00:20	00:46		05:43	06:21		06:53	07:21	07:41		09:01		10:01	10:21		20:01	20:21	20:41	21:01		23:41	00:01
BGB	00:37	01:04		06:07	06:40	07:00	07:17	07:40	08:00		09:20		10:20	10:40		20:20	20:40	21:00	21:20		00:00	00:20
BNB	00:42	01:09		06:12	06:44	07:04	07:24	07:44	08:04		09:24		10:24	10:44		20:24	20:44	21:04	21:24		00:04	00:24
BPOP	00:54	01:24		06:22	06:52	07:12	07:32	07:52	08:12		09:32		10:32	10:52		20:32	20:52	21:12	21:32		00:12	00:32
BSKV	01:02	01:32		06:30	06:59	07:19	07:39	07:59	08:19		09:39		10:39	10:59		20:39	20:59	21:19	21:39		00:19	00:39
BLRD	01:16	01:46		06:44	07:15	07:35	07:55	08:15	08:35		09:55		10:55	11:16		20:56	21:15	21:34	21:55		00:35	00:55
BBFD	01:23	01:53		06:51	07:21	07:41	08:01	08:21	08:41		10:01							21:41	22:01		00:41	01:01

S2 WI (Mo-Fr)									
BBFD					05:55	20	20:55	21:15	21:35
BLRD			05:02	20	06:02		21:02	21:22	21:42
BSKV			05:16		06:16		21:16	21:36	21:56
BAHU		05:02	05:22		06:22		21:22	21:42	
BPOP	04:44	05:04	05:24		06:24		21:24	21:44	
BBLB	05:06	05:26	05:46		06:46		21:46	22:05	
BBU	05:14	05:34	05:54		06:54		21:54		

S2 WI (Fr)					
BBFD	21:15	20	21:55	22:15	22:35
BLRD	21:22		22:02	22:22	22:42
BSKV	21:36		22:16	22:36	22:56
BAHU	21:42		22:22	22:42	
BPOP	21:44		22:24	22:44	
BBLB	22:06		22:46	23:05	
BBU	22:14		22:54		

S2 WI (Sa)								
BBFD				08:35	20	21:55	22:15	22:35
BLRD		07:42	20	08:42		22:02	22:22	22:42
BSKV		07:56		08:56		22:16	22:36	22:56
BAHU	07:42	08:02		09:02		22:22	22:42	
BPOP	07:44	08:04		09:04		22:24	22:44	
BBLB	08:06	08:26		09:26		22:46	23:05	
BBU	08:14	08:34		09:34		22:54		

S2 WI (So)							
BBFD			10:15	20	20:55	21:15	21:35
BLRD	09:22	20	10:22		21:02	21:22	21:42
BSKV	09:36		10:36		21:16	21:36	21:56
BAHU	09:42		10:42		21:22	21:42	
BPOP	09:44		10:44		21:24	21:44	
BBLB	10:06		11:06		21:46	22:05	
BBU	10:14		11:14		21:54		

S2 WI (Mo-Fr)										
BBU	04:31		05:11	20	20:31	20:51	20	21:31	21:51	
BBLB	04:40		05:20		20:40	21:00		21:40	22:00	22:20
BGB	04:50		05:30		20:50	21:10		21:50	22:10	22:30
BNB	04:54		05:34		20:54	21:14		21:54	22:14	22:34
BPOP	05:01		05:42		21:02	21:22		22:02		
BSKV		05:29	05:49		21:09	21:29		22:09		
BLRD		05:44	06:05		21:25	21:45		22:25		
BBFD		05:51	06:11		21:31					

S2 WI (Fr)							
BBU	20:51	20	21:31	20	22:31	22:51	
BBLB	21:00		21:40		22:40	23:00	23:20
BGB	21:10		21:50		22:50	23:10	23:30
BNB	21:14		21:54		22:54	23:14	23:34
BPOP	21:22		22:02		23:02		
BSKV	21:29		22:09		23:09		
BLRD	21:45		22:25		23:25		
BBFD	21:51		22:31				

S2 WI (Sa)									
BBU			08:11	20	21:31	20	22:31	22:51	
BBLB			08:20		21:40		22:40	23:00	23:20
BGB		08:10	08:30		21:50		22:50	23:10	23:30
BNB		08:14	08:34		21:54		22:54	23:14	23:34
BPOP		08:22	08:42		22:02		23:02		
BSKV	08:09	08:29	08:49		22:09		23:09		
BLRD	08:24	08:45	09:05		22:25		23:25		
BBFD	08:31	08:51	09:11		22:31				

S2 WI (So)									
BBU				10:11	20	20:31	21:31	21:51	
BBLB				10:20		20:40	21:40	22:00	22:20
BGB		09:50	20	10:30		20:50	21:50	22:10	22:30
BNB		09:54		10:34		20:54	21:54	22:14	22:34
BPOP		10:02		10:42		21:02	22:02		
BSKV	09:49	10:09		10:49		21:09	22:09		
BLRD	10:04	10:25		11:05		21:25	22:25		
BBFD	10:11	10:31		11:11		21:31			

S25 V (Mo-Fr)								
BTLS	00:05	00:25	00:45			04:05	20	23:45
BAHU	00:27	00:47	01:07		04:07	04:27		00:07
BPOP	00:29	00:49	01:09		04:09	04:29		00:09
BNB	00:37	00:57	01:17		04:17	04:37		00:17
BSNH	00:48	01:08			04:28	04:48		00:28
BTG	00:58	01:17			04:38	04:58		00:38
BHLS	01:04			04:34	04:44	05:04		00:44
BHD	01:07			04:37	04:47	05:07		00:47

S25 V (Sa)							
BTLS	00:05	00:25	00:44	NV	04:45	20	23:45
BAHU	00:27	00:47	01:07		05:07		00:07
BPOP	00:29	00:49	01:09		05:09		00:09
BNB	00:37	00:57			05:17		00:17
BSNH	00:48	01:08			05:28		00:28
BTG	00:58	01:18			05:38		00:38
BHLS	01:04	01:24			05:44		00:44
BHD	01:07	01:27			05:47		00:47

S25 V (So)								
BTLS	00:05	00:25	00:44	NV		06:25	20	23:45
BAHU	00:27	00:47	01:07			06:47		00:07
BPOP	00:29	00:49	01:09		06:39	06:49		00:09
BNB	00:37	00:57			06:47	06:57		00:17
BSNH	00:48	01:08			07:01	07:08		00:28
BTG	00:58	01:18				07:18		00:38
BHLS	01:04	01:24				07:24		00:44
BHD	01:07	01:27				07:27		00:47

S25 V (Mo-Fr)									
BHD	00:08	00:28	00:38				04:08	20	23:48
BHLS	00:11	00:31	00:41				04:11		23:51
BTG	00:18	00:38				04:08	04:18		23:58
BSNH	00:28	00:48				04:18	04:28		00:08
BNB	00:39	00:59			04:19	04:29	04:39		00:19
BPOP	00:47	01:07			04:27	04:36	04:47		00:27
BLIS	01:08	01:27		04:37	04:48		05:08		00:48
BTLS	01:11			04:41	04:51		05:11		00:51

S25 V (Sa)									
BHD	00:08	20	00:48	NV		05:08	20	23:28	23:48
BHLS	00:11		00:51			05:11		23:31	23:51
BTG	00:18		00:58			05:18		23:38	23:58
BSNH	00:28		01:08			05:28		23:48	00:08
BNB	00:39		01:19			05:39		23:59	00:19
BPOP	00:47		01:27		05:27	05:47		00:07	00:27
BLIS	01:08		01:48		05:48	06:08		00:28	00:47
BTLS	01:11		01:51		05:51	06:11		00:31	00:51

S25 V (So)								
BHD	00:08	20	00:48	NV		07:08	20	23:48
BHLS	00:11		00:51			07:11		23:51
BTG	00:18		00:58			07:18		23:58
BSNH	00:28		01:08		07:08	07:28		00:08
BNB	00:39		01:19		07:19	07:39		00:19
BPOP	00:47		01:27		07:27	07:47		00:27
BLIS	01:08		01:48		07:48	08:08		00:48
BTLS	01:11		01:51		07:51	08:11		00:51

S26 VI (Mo-Fr)										
BTLS			05:35	20	19:35	19:55	20	20:35	20	21:15
BLIS		05:18	05:38		19:38	19:58		20:38		21:18
BPOP		05:39	05:59		19:59	20:19		20:59		
BNB	05:27	05:47	06:07		20:07	20:27				
BWAI	05:46	06:06	06:26		20:26					

S26 VI (Sa)						
BTLS	08:15	20	19:35	19:55	20	20:35
BLIS	08:18		19:38	19:58		20:38
BPOP	08:39		19:59	20:19		
BNB			20:07	20:27		
BWAI						

S26 VI (So)					
BTLS	11:15	20	19:55	20	20:35
BLIS	11:18		19:58		20:38
BPOP	11:39		20:19		
BNB					
BWAI					

S26 VI (Mo-Fr)							
BWAI				05:50	20	20:10	20:30
BNB		05:09	20	06:09		20:29	20:49
BPOP		05:17		06:17		20:37	
BLIS	05:18	05:38		06:38		20:58	
BTLS	05:21	05:41		06:41		21:01	

S26 VI (Sa)						
BWAI						
BNB			08:09	08:29		
BPOP			08:17	08:37	20	19:57
BLIS	07:58	20	08:38	08:58		20:18
BTLS	08:01		08:41	09:01		20:21

S26 VI (So)						
BWAI						
BNB			11:09	11:29		
BPOP			11:17	11:37	20	19:57
BLIS	10:58	20	11:38	11:58		20:18
BTLS	11:01		11:41	12:01		20:21

S3 B (Mo-Fr)							
BE	00:05	00:25		03:45	04:05	20	22:45
BKPK	00:20	00:40	03:40	04:00	04:20		23:00
BOKS	00:33	00:53	03:53	04:13	04:33		23:13
BOSB	00:39	00:57	03:59	04:19	04:39		23:19
BCHS	01:00		04:20	04:40	05:00		23:40
BWKS	01:03		04:23	04:43	05:03		23:43
BSPA	|		|	|	05:17		23:57
BGWD	01:05		04:25	04:45			

(abends)			
BE	23:05	23:25	23:45
BKPK	23:20	23:40	00:00
BOKS	23:33	23:53	00:13
BOSB	23:39	23:59	00:19
BCHS	00:00	00:20	00:40
BWKS	00:02	00:23	00:43
BSPA		|	|
BGWD		00:25	00:45

S3 B (Sa)								
BE	00:05	00:25	NV	04:25	20	06:05	20	22:45
BKPK	00:20	00:40		04:40		06:20		23:00
BOKS	00:33	00:53		04:53		06:33		23:13
BOSB	00:39	00:57		04:59		06:39		23:19
BCHS	01:00			05:20		07:00		23:40
BWKS	01:03					07:03		23:43
BSPA	|					07:17		23:57
BGWD	01:05							

S3 B (So)								
BE	00:05	00:25	NV	06:25	20	08:05	20	22:45
BKPK	00:20	00:40		06:40		08:20		23:00
BOKS	00:33	00:53		06:53		08:33		23:13
BOSB	00:39	00:57		06:59		08:39		23:19
BCHS	01:00			07:20		09:00		23:40
BWKS	01:03					09:03		23:43
BSPA	|					09:17		23:57
BGWD	01:05							

S3 B (Mo-Fr)									
BGWD		00:39		03:59	20	04:59			
BSPA		|		|		|	05:08	20	23:48
BWKS	00:22	00:42		04:02		05:02	05:22		00:02
BCHS	00:24	00:44		04:04		05:04	05:24		00:04
BOSB	00:47	01:07	04:07	04:27		05:27	05:47		00:27
BOKS	00:52	01:12	04:12	04:32		05:32	05:52		00:32
BKPK	01:05	01:24	04:25	04:45		05:45	06:05		00:45
BE	01:20		04:40	05:00		06:00	06:20		01:00

S3 B (Sa)									
BGWD		00:39		04:59	05:19				
BSPA		|		|	|		07:08	20	23:48
BWKS	00:22	00:42		05:02	05:22		07:22		00:02
BCHS	00:24	00:44		05:04	05:24	20	07:24		00:04
BOSB	00:47	01:07	NV	05:27	05:47		07:47		00:27
BOKS	00:52	01:12		05:32	05:52		07:52		00:32
BKPK	01:05	01:25		05:45	06:05		08:05		00:45
BE	01:20	01:40		06:00	06:20		08:20		01:00

S3 B (So)									
BGWD		00:39		06:59	07:19				
BSPA		|		|	|		09:08	20	23:48
BWKS	00:22	00:42		07:02	07:22		09:22		00:02
BCHS	00:24	00:44		07:04	07:24	20	09:24		00:04
BOSB	00:47	01:07	NV	07:27	07:47		09:47		00:27
BOKS	00:52	01:12		07:32	07:52		09:52		00:32
BKPK	01:05	01:25		07:45	08:05		10:05		00:45
BE	01:20	01:40		08:00	08:20		10:20		01:00

S3 BI (Mo-Fr)										
BE	04:35	20	08:35		14:15	20	20:15			23:35
BFRH	04:46		08:46	20	14:26		20:26	20	23:26	23:46
BOSB	05:07		09:07		14:47		20:47		23:47	00:07

S3 BI (Sa)					
BE	06:35	20	07:35		
BFRH	06:46		07:46	20	23:26
BOSB	07:07		08:07		23:47

S3 BI (So)						
BE	08:35	20	09:35			23:35
BFRH	08:46		09:46	20	23:26	23:46
BOSB	09:07		10:07		23:47	00:07

S3 BI (Mo-Fr)												
BOSB	04:57	20	07:57	20	13:37	20	19:37	20	22:57	20	23:57
BFRH	05:19		08:19		13:59		19:59		23:19		00:19
BE	05:30		08:30		14:10		20:10		23:30		00:30

S3 BI (Sa)					
BOSB	07:17	20	22:57	20	23:57
BFRH	07:39		23:19		00:19
BE			23:30		00:30

S3 BI (So)					
BOSB	09:17	20	22:57	20	23:57
BFRH	09:39		23:19		00:19
BE			23:30		00:30

S41 A (Mo-Fr)																		
BSKR	00:06	00:16	00:26		00:36	00:46	00:56	01:08	01:16							04:16	10	23:56
BBUP	00:11	00:21	00:31		00:41	00:51	01:01	01:13	01:21						04:11	04:21		00:01
BWES	00:22	00:32	00:42		00:52	01:03	01:12	01:24					04:02	10	04:22	04:32		00:12
BGB	00:35	00:45	00:55		01:05	01:16		01:37			03:55	10	04:15		04:35	04:45		00:25
BGSS	00:42	00:52	01:02		01:12	01:22				03:52	04:02		04:22		04:42	04:52		00:32
BOK	00:51	01:01	01:10	01:15	01:20					04:01	04:11		04:31		04:51	05:01		00:41
BSKR	01:08	01:15		01:27						04:15	04:25		04:45		05:05	05:15		00:55

S41 A (Sa)						
BSKR	00:06	00:16	NV	05:16	10	23:56
BBUP	00:11	00:21		05:21		00:01
BWES	00:22	00:32		05:32		00:12
BGB	00:35	00:45		05:45		00:25
BGSS	00:42	00:52		05:52		00:32
BOK	00:51	01:01		06:01		00:41
BSKR	01:05	01:15		06:15		00:55

S41 A (So)						
BSKR	00:06	00:16	NV	06:06	10	23:56
BBUP	00:11	00:21		06:11		00:01
BWES	00:22	00:32		06:22		00:12
BGB	00:35	00:45		06:35		00:25
BGSS	00:42	00:52		06:42		00:32
BOK	00:51	01:01		06:51		00:41
BSKR	01:05	01:15		07:05		00:55

S42 R (Mo-Fr)																	
BSKR	00:00	10	00:20	00:30	10	00:50	01:00	01:10	01:20						04:00	10	23:50
BHER	00:07		00:27	00:37		00:57	01:07	01:17	01:26					03:57	04:07		23:57
BOK	00:16		00:36	00:46		01:06	01:16	01:26					03:56	04:06	04:16		00:06
BGSS	00:24		00:44	00:54		01:14	01:24	01:34				03:54	04:04	04:14	04:24		00:14
BGB	00:31		00:51	01:01		01:21	01:30					04:01	04:11	04:21	04:31		00:21
BWES	00:43		01:03	01:13		01:33					04:03	04:13	04:23	04:33	04:43		00:33
BHAL	00:49		01:09	01:19						03:58	04:09	04:19	04:29	04:39	04:49		00:39
BBUP	00:55		01:15	01:24						04:05	04:15	04:25	04:35	04:45	04:55		00:45
BSKR	01:00		01:20							04:10	04:20	04:30	04:40	04:50	05:00		00:50

S42 R (Sa)						
BSKR	00:00	00:10	NV	05:10	10	23:50
BHER	00:07	00:17		05:17		23:57
BOK	00:16	00:26		05:26		00:06
BGSS	00:24	00:34		05:34		00:14
BGB	00:31	00:41		05:41		00:21
BWES	00:43	00:53		05:53		00:33
BHAL	00:49	00:59		05:59		00:39
BBUP	00:55	01:05		06:05		00:45
BSKR	01:00	01:10		06:10		00:50

S42 R (So)						
BSKR	00:00	00:10	NV	06:40	10	23:50
BHER	00:07	00:17		06:47		23:57
BOK	00:16	00:26		06:56		00:06
BGSS	00:24	00:34		07:04		00:14
BGB	00:31	00:41		07:11		00:21
BWES	00:43	00:53		07:23		00:33
BHAL	00:49	00:59		07:29		00:39
BBUP	00:55	01:05		07:35		00:45
BSKR	01:00	01:10		07:40		00:55

S41 AI (Mo-Fr)																							
BSKR				05:21	10	09:41	10	10:11	10:21	10	10:41			13:31	10	19:41	10	20:01	10	20:21	20:31	20:41	21:01
BBUP		05:06	10	05:26		09:46		10:16	10:26		10:46		13:26	13:36		19:46		20:06		20:26	20:36	20:46	21:06
BWES	05:07	05:17		05:37		09:57		10:27	10:37		10:57	13:27	13:37	13:47		19:57		20:17		20:37	20:47	20:57	21:17
BGB	05:20	05:30		05:50		10:10		10:40	10:50		11:10	13:40	13:50	14:00		20:10		20:30		20:50	21:00		
BGSS	05:27	05:37		05:57		10:17		10:47				13:47	13:57	14:07		20:17		20:37		20:57	21:06		
BHER	05:44	05:54		06:14		10:34		11:04				14:04	14:14	14:24		20:34		20:54		21:14			
BTHF	05:48	05:58		06:18		10:38						14:08	14:18	14:28		20:38		20:58		21:18			
BSKR	05:50	06:00		06:20		10:40						14:10	14:20	14:30		20:40		21:00					

S42 RI (Mo-Fr)																				
BSKR						05:45		06:05	10	10:15	10:25					14:25	10	20:15	10	20:35
BTHF				05:28	10	05:48	10	06:08		10:18	10:28			13:48	10	14:28		20:18		20:38
BHER			05:22	05:32		05:52		06:12		10:22	10:32			13:52		14:32		20:22		20:42
BGSS		05:29	05:39	05:49		06:09		06:29		10:39	10:49		13:59	14:09		14:49		20:39		20:59
BGB		05:36	05:46	05:56		06:16		06:36		10:46	10:56	13:56	14:06	14:16		14:56		20:46		21:06
BWES	05:28	05:48	05:58	06:08		06:28		06:48		10:58	11:08	14:08	14:18	14:28		15:08		20:58		21:18
BBUP	05:40	06:00	06:10	06:20		06:40		07:00		11:10	11:19	14:20	14:30	14:40		15:20		21:10		21:30
BSKR	05:45	06:05	06:15	06:25		06:45		07:05		11:15		14:25	14:35	14:45		15:25		21:15		

S45 U (Mo-Fr)						
BGAS			04:51			
BFLH			|	05:05	20	23:45
BSW	04:22	04:42	05:00	05:20		00:00
BTHF	04:36	04:56	05:16	05:36		00:16
BSKR	04:38	04:58	05:18	05:38		00:18

S45 U (Sa)							
BGAS			04:51				
BFLH			|	05:05	05:25	20	23:45
BSW	04:31	04:52	05:00	05:20	05:40		00:00
BTHF	04:45	05:05	05:15	05:35	05:56		00:16
BSKR					05:58		00:18

S45 U (So)						
BGAS	06:21					
BFLH	|			07:05	20	23:45
BSW	06:30	06:52	07:02	07:20		00:00
BTHF	06:46	07:06	07:16	07:36		00:16
BSKR			07:18	07:38		00:18

S45 U (Mo-Fr)								
BSKR	00:08	00:28		04:48	20	23:08	23:28	23:48
BTHF	00:10	00:30		04:50		23:10	23:30	23:50
BSW	00:23	00:43	04:44	05:04		23:24	23:43	00:04
BFLH			04:58	05:18		23:38		|
BGAS								00:12

S45 U (Sa)										
BSKR	00:08	00:28				06:08	20	23:08	23:28	23:48
BTHF	00:10	00:30		04:50	20	06:10		23:10	23:30	23:50
BSW	00:23	00:43	04:34	05:04		06:24		23:24	23:43	00:04
BFLH			04:48	05:18		06:38		23:38		|
BGAS										00:12

S45 U (So)										
BSKR	00:08	00:28				07:28	20	23:08	23:28	23:48
BTHF	00:10	00:30		06:50	20	07:30		23:10	23:30	23:50
BSW	00:23	00:43	06:34	07:04		07:44		23:24	23:43	00:04
BFLH			06:48	07:18		07:58		23:38		|
BGAS										00:12

S46 D (Mo-Fr)												Mo	Fr	(D → AI)	
BKW	00:01	00:21	00:41	01:01		04:01	20	21:01	21:21	21:41	20	23:41	00:01	21:21		
BGAS	00:16	00:36	00:56	01:16	03:56	04:16		21:16	21:36	21:56		23:56	00:16	21:36	04:53	05:13
BSW	00:25	00:45	01:05		04:05	04:25		21:25	21:45	22:05		00:05	00:25	21:45	05:03	05:23
BTHF	00:41	00:58	01:18		04:21	04:41		21:41	22:01	22:21		00:21	00:39	22:01	05:18	05:38
BSKR	00:43				04:23	04:43		21:43	22:03	22:23		00:23	00:41	22:03	05:20	05:40
BWES					04:39	04:59		21:59	22:19	22:39		00:39		22:19		
BGB																

S46 D (Sa)												
BKW	00:01	00:21	NV	04:41	05:01	20	11:41	20	18:41	20	23:41
BGAS	00:16	00:36		04:56	05:16		11:56		18:56		23:56
BSW	00:25	00:45		05:05	05:25		12:05		19:05		00:05
BTHF	00:41	00:59		05:19	05:39		12:19		19:19		00:19
BSKR	00:43	01:01		05:21	05:41		12:21		19:21		00:21
BWES					05:57		12:38		19:38		00:37
BGB							12:50		19:50		

S46 D (So)										
BKW	00:01	00:21	NV	06:21	20	11:41	20	18:41	20	23:41
BGAS	00:16	00:36		06:36		11:56		18:56		23:56
BSW	00:25	00:45		06:45		12:05		19:05		00:05
BTHF	00:39	00:59		06:59		12:19		19:19		00:19
BSKR	00:41	01:01		07:01		12:21		19:21		00:21
BWES				07:17		12:38		19:38		00:37
BGB						12:50		19:50		

S46 D (Mo-Fr)													(Mo)		(Fr)			(RI → D)			
BGB																					
BWES	00:16	00:36			04:36	20	20:16	20:36	20:56	21:16	20	23:36	23:56	00:18	00:38	20:36	20:56	23:56				
BSKR	00:33	00:53			04:53		20:33	20:53	21:13	21:33		23:53	00:13	00:35	00:55	20:53	21:13	00:13	10:45	11:05	20:45	21:05
BTHF	00:35	00:55	03:55	20	04:55		20:35	20:55	21:15	21:35		23:55	00:15	00:37	00:57	20:55	21:15	00:15	10:48	11:08	20:48	21:08
BSW	00:51	01:11	04:11		05:11		20:51	21:11	21:31	21:51		00:11	00:31	00:51	01:11	21:11	21:31	00:31	11:01	11:21	21:01	21:21
BGAS	01:00	01:19	04:20		05:20		21:00	21:20	21:40	22:00		00:20	00:40	01:00	01:19	21:20	21:40	00:40	11:10	11:30	21:10	21:30
BKW	01:16		04:36		05:36		21:16	21:36	21:56	22:16		00:36	00:56	01:16		21:36	21:56	00:58				

S46 D (Sa)													
BGB									13:05	20	20:05		
BWES	00:16	00:36					05:58	20	13:18		20:18	20	23:58
BSKR	00:33	00:57	NV	04:57	05:15	20	06:15		13:35		20:35		00:15
BTHF	00:35	00:59		04:59	05:17		06:17		13:37		20:37		00:17
BSW	00:51	01:13		05:13	05:31		06:31		13:51		20:51		00:31
BGAS	01:00	01:22		05:22	05:40		06:40		14:00		21:00		00:40
BKW	01:16	01:38		05:38	05:56		06:56		14:16		21:16		00:56

S46 D (So)													
BGB									13:05	20	20:05		
BWES	00:18	00:38					07:18	20	13:18		20:18	20	23:58
BSKR	00:35	00:57	NV	06:27	06:55	20	07:35		13:35		20:35		00:15
BTHF	00:35	00:59		06:29	06:57		07:37		13:37		20:37		00:17
BSW	00:51	01:13		06:43	07:11		07:51		13:51		20:51		00:31
BGAS	01:00	01:22		07:00	07:20		08:00		14:00		21:00		00:40
BKW	01:16	01:38		07:16	07:36		08:16		14:16		21:16		00:56

S47 K (Mo-Fr)												
	morgens									abends		
BSPF	00:09	20	01:09	04:09	20	04:49	05:08	20	20:28	20:49	20	23:49
BSW	00:15		01:15	04:15		04:55	05:15		20:35	20:55		23:55
BHER							05:26		20:46			

S47 K (Sa)								
BSPF	05:09	20	06:09	06:28	06:48	20	20:28
BSW	05:15		06:15	06:34	06:55		20:35
BHER					07:04		20:44

S47 K (So)							
BSPF	07:09	20	08:09	08:28	08:48	20	20:28
BSW	07:15		08:15	08:34	08:55		20:35
BHER					09:04		20:44

S47 K (Mo-Fr)												
	morgens									abends		
BHER							05:44	20	20:24			
BSW	00:19	20	01:19	04:19	20	05:39	05:56		20:36	20:59	20	23:59
BSPF	00:25		01:25	04:25		05:45	06:02		20:42	21:05		00:05

S47 K (Sa)						
BHER				07:24	20	20:24
BSW	05:19	20	07:19	07:36		20:36
BSPF	05:25		07:25	07:42		20:42

S47 K (So)						
BHER				09:24	20	20:24
BSW	07:19	20	09:19	09:36		20:36
BSPF	07:25		09:25	09:42		20:42

S5 E (Mo-Fr)										(abends)			
BSTN							04:09	20	20:29		21:09		
BSTV						04:00	04:20		20:40	20	21:20		
BMDF	00:01	00:21	00:41		04:01	04:21	04:41		21:01		21:41	20	23:41
BLI	00:14	00:34	00:54	03:54	04:14	04:34	04:54		21:14		21:54		23:54
BOSB	00:23	00:43	01:03	04:03	04:23	04:43	05:03		21:23		22:03		00:03
BWKS	00:47	01:07	01:27	04:27	04:47	05:07	05:27		21:47		22:27		00:27
BGWD	00:50	01:10											

S5 E (Sa)																
BSTN								05:09	20	05:49	40	09:09	20	19:09	40	20:29
BSTV								05:20		06:00	20	09:20		19:20	20	20:40
BMDF	00:01	00:21	00:42	NV	04:42	05:01	20	05:41		06:21		09:41		19:41		21:01
BLI	00:14	00:34	00:54		04:54	05:14		05:54		06:34		09:54		19:54		21:14
BOSB	00:23	00:42	01:07		05:02	05:22		06:02		06:42		10:02		20:02		21:22
BWKS	00:47				05:27	05:47		06:27		07:07		10:27		20:27		21:27

S5 E (So)																
BSTN								07:09	20	07:49	40	11:09	20	19:09	40	20:29
BSTV								07:20		08:00	20	11:20		19:20	20	20:40
BMDF	00:01	00:21	00:42	NV	06:42	07:01	20	07:41		08:21		11:41		19:41		21:01
BLI	00:14	00:34	00:54		06:54	07:14		07:54		08:34		11:54		19:54		21:14
BOSB	00:23	00:42	01:07		07:02	07:22		08:02		08:42		12:02		20:02		21:22
BWKS	00:47				07:27	07:47		08:27		09:07		12:27		20:27		21:27

S5 E (Mo-Fr)											(abends)		Fr
BGWD					04:04	04:24								
BWKS	00:07	00:27	00:37		04:07	04:27	20	19:07	20	19:47	20	23:27	23:47	23:47
BOSB	00:32	00:52	01:02		04:32	04:52		19:32		20:12		23:32	00:12	00:12
BLI	00:41	01:01	01:10	04:21	04:41	05:01		19:41		20:21		00:01	00:21	00:21
BMDF	00:52	01:13		04:33	04:53	05:13		19:53		20:33		00:12	00:32	00:33
BSTV		01:34		04:54	05:14	05:34		20:14		20:54				00:54
BSTN		01:44		05:04	05:24	05:44		20:24		21:04				01:04

S5 E (Sa)													
BGWD													
BWKS	00:07						05:07	20	07:47	20	17:47	20	19:47
BOSB	00:32	00:53	01:13	NV	04:52	20	05:32		08:12		18:12		20:12
BLI	00:41	01:05	01:22		05:01		05:41		08:21		18:21		20:21
BMDF	00:52	01:16	01:35		05:13		05:53		08:33		18:33		20:33
BSTV			01:55		05:34		06:14		08:54		18:54		20:54
BSTN			02:06		05:44		06:24	40	09:04		19:04	40	21:04

S5 E (So)												
BGWD												
BWKS	00:07						07:07	20	09:47	17:47	20	19:47
BOSB	00:32	00:53	01:13	NV	06:52	20	07:32		10:12	18:12		20:12
BLI	00:41	01:05	01:22		07:01		07:41		10:21	18:21		20:21
BMDF	00:52	01:16	01:35		07:13		07:53		10:33	18:33		20:33
BSTV			01:55		07:34		08:14		10:54	18:54		20:54
BSTN			02:06		07:44		08:24	40	11:04	19:04	40	21:04

S5 EI (Mo-Fr)													(abends)								Fr
BHPG						05:44	20	09:04		13:04	20	19:44									
BMDF			04:31	04:51	20	05:51		09:11	20	13:11		19:51	20:11	20:31	20:51	20	21:31	21:49	20	23:09	20:31
BLI	04:04	20	04:44	05:04		06:04		09:24		13:24		20:04	20:24	20:44	21:04		21:44	22:04		23:24	20:44
BWRS	04:10		04:50	05:11		06:11		09:31		13:31		20:11	20:30	20:50	21:10		21:50	22:10		23:30	20:50
BOSB				05:13		06:13		09:33		13:33		20:13									20:52
BWKS				05:37		06:37		09:57		13:57		20:37									

S5 EI (Sa)				
BHPG				
BMDF		06:11	20	19:51
BLI	06:04	06:24		20:04
BWRS	06:11	06:31		20:11
BOSB	06:13	06:33		20:13
BWKS	06:37	06:57		20:37

S5 EI (So)				
BHPG				
BMDF		08:11	20	19:51
BLI	08:04	08:24		20:04
BWRS	08:11	08:31		20:11
BOSB	08:13	08:33		20:13
BWKS	08:37	08:57		20:37

S5 EI (Mo-Fr)																	(abends)							
BWKS					05:17	20	07:57	08:17	20	11:37	11:57	20	18:37	18:57	20	19:57	20:17	20:37						
BOSB					05:42		08:22	08:42		12:02	12:22		19:02	19:22		20:22	20:42	21:02						
BWRS	04:24	04:44	05:04	20	05:44		08:24	08:44		12:04	12:24		19:04	19:24		20:24	20:44	21:04	21:24	21:44	20	23:04	23:22	23:42
BLI	04:31	04:51	05:11		05:51		08:31	08:51		12:11	12:31		19:11	19:31		20:31	20:51	21:11	21:31	21:51		23:11	23:28	23:48
BMDF	04:44	08:04	05:23		06:03		08:43	09:04		12:24	12:43		19:23	19:42		20:42	21:04	21:22	21:42	22:04		23:24		
BHPG			05:29		06:09		08:49				12:49		19:29											

S5 EI (Sa)						S5 EI (So)					
BWKS		06:17	20	19:17	19:37	19:57		08:17	20	19:17	19:37	19:57
BOSB		06:42		19:42	20:02	20:22		08:42		19:42	20:02	20:22
BWRS	06:24	06:44		19:44	20:04	20:24	08:24	08:44		19:44	20:04	20:24
BLI	06:31	06:51		19:51	20:11	20:31	08:31	08:51		19:51	20:11	20:31
BMDF	06:44	07:04		20:04	20:22	20:42	08:44	09:04		20:04	20:22	20:42
BHPG												

S5 EIII							FS	(Sa)		(So)	
BSTN	00:09		21:49	40	23:09		23:49	04:12	04:49	06:12	06:49
BSTV	00:20	21:40	22:00	20	23:20	23:40	00:00	04:22	05:00	06:22	07:00
BMDF	00:40	22:00	22:20		23:40	00:00	00:20	04:41	05:20	06:41	07:20

S5 EIII (abends)						F-S	(Sa)	(So)
BMDF	00:53	20:53	21:13	20	00:13	00:33	01:17	01:17
BSTV	01:14	21:13	21:34		00:34	00:54	01:36	01:36
BSTN	01:25		21:44	40	00:44	01:04	01:46	01:46

S7 O (Mo-Fr)								S7 O (Sa)							S7 O (So)						
BAF	00:11	20	00:51			04:11	20	23:51	00:11	00:31	00:51	NV	04:51	20	23:51	00:11	00:31	00:51	NV	06:51	20	23:51
BLI	00:26		01:06		04:06	04:26		00:06	00:26	00:46	01:08		05:06		00:06	00:26	00:46	01:08		07:06		00:06
BCHS	00:57		01:37	04:17	04:37	04:57		00:37	00:57	01:21	01:51		05:37		00:37	00:57	01:21	01:51		07:37		00:37
BWKS	01:00		01:40	04:20	04:40	05:00		00:40	01:00	01:30	02:00		05:40		00:40	01:00	01:30	02:00		07:40		00:40
BGWD	01:03		01:42	04:23	04:43	05:03		00:43	01:03	01:33	02:03		05:43		00:43	01:03	01:33	02:03		07:43		00:43
BPDH	01:25			04:45	05:05	05:25		01:05	01:25	01:55	02:25		06:05		01:05	01:25	01:55	02:25		08:05		01:05

S7 O (Mo-Fr)								S7 O (Sa)							S7 O (So)						
BPDH	00:00	00:20	00:40			04:00	20	23:40	00:00	00:20	NV	04:10	04:40	20	23:40	00:00	00:20	NV	06:10	06:40	20	23:40
BGWD	00:22	00:42	01:02		04:02	04:22		00:02	00:22	00:42		04:32	05:02		00:02	00:22	00:42		06:32	07:02		00:02
BWKS	00:25	00:45	01:05		04:05	04:25		00:05	00:25	00:45		04:35	05:05		00:05	00:25	00:45		06:35	07:05		00:05
BOSB	00:49	01:09	01:29	04:09	04:29	04:49		00:29	00:49	01:09		05:09	05:29		00:29	00:49	01:09		07:09	07:29		00:29
BLI	00:58	01:18		04:18	04:38	04:58		00:38	00:58	01:20		05:18	05:38		00:38	00:58	01:20		07:18	07:38		00:38
BAF	01:14			04:34	04:54	05:14		00:54	01:14	01:35		05:34	05:54		00:54	01:14	01:35		07:34	07:54		00:54

S7 OI (Mo-Fr)													S7 OI (Sa)													S7 OI (So)									
BAF					05:01	20	20:01	20:21	20	22:01	20	22:41	23:01					07:01	20	20:01	20:21	20	22:01	20	22:41	23:01					09:01	20	20:01	20	20:41	21:01
BOSB				05:06	05:26		20:26	20:46		22:26		23:06	23:26				07:06	07:26		20:26	20:46		22:26		23:06	23:26				09:06	09:26		20:26		21:06	21:26
BCHS			05:07	05:27	05:47		20:47	21:07		22:47		23:27	23:47			07:07	07:27	07:47		20:47	21:07		22:47		23:27	23:47			09:07	09:27	09:47		20:47		21:27	21:47
BWKS			05:10	05:30	05:50		20:50	21:10		22:50		23:30				07:10	07:30	07:50		20:50	21:10		22:50		23:30				09:10	09:30	09:50		20:50		21:30	
BGWD			05:13	05:33	05:53		20:53	21:13		22:53		23:32				07:13	07:33	07:53		20:53	21:13		22:53		23:32				09:13	09:33	09:53		20:53		21:32	
BWSS	04:42	20	05:23	05:43	06:03		21:03	21:22		23:02				06:43	20	07:23	07:43	08:03		21:03	21:22		23:02				08:43	20	09:23	09:43	10:03		21:03			
BPDH	04:55		05:35	05:55	06:15		21:15							06:55		07:35	07:55	08:15		21:15							08:55		09:35	09:55	10:15		21:15			

S7 OI (Mo-Fr)										S7 OI (Sa)										S7 OI (So)								
BPDH				05:10	20	21:10	21:30							07:10	20	21:10	21:30							09:10	20	20:10	20:30	20	21:30
BWSS			05:02	05:22		21:22	21:42						07:02	07:22		21:22	21:42						09:02	09:22		20:22	20:42		21:42
BGWD	04:32	20	05:12	05:32		21:32					06:32	20	07:12	07:32		21:32					08:32	20	09:12	09:32		20:32	20:52		
BWKS	04:35		05:15	05:35		21:35	21:55	20	22:35	22:55	06:35		07:15	07:35		21:35	21:55	20	22:35	22:55	08:35		09:15	09:35		20:35	20:55		
BOSB	04:59		05:39	05:59		21:59	22:19		22:59	23:19	06:59		07:39	07:59		21:59	22:19		22:59	23:19	08:59		09:39	09:59		20:59	21:19		
BAF	05:24		06:04	06:24		22:24	22:44		23:24		07:24		08:04	08:24		22:24	22:44		23:24		09:24		10:04	10:24		21:24			

S75 T (Mo-Fr)							S75 T (Sa)								S75 T (So)							
BWAB	00:16	00:36	00:56		04:16	20	23:56	00:16	20	00:56	01:16	NV	04:36	20	23:56	00:16	20	00:56	01:16	NV	06:36	20	23:56
BHH	00:18	00:38	00:57	03:58	04:18		23:58	00:18		00:58	01:18		04:38		23:58	00:18		00:58	01:18		06:38		23:58
BLI	00:31	00:51		04:11	04:31		00:11	00:31		01:11	01:31		04:51		00:11	00:31		01:11	01:31		06:51		00:11
BOSB	00:40	01:00		04:20	04:40		00:20	00:40		01:20			05:00		00:20	00:40		01:20			07:00		00:20

S75 T (Mo-Fr)							S75 T (Sa)							S75 T (So)						
BOSB	00:04	00:24	00:44		04:04	20	23:44	00:04	20	01:04		04:44	20	23:44	00:04	20	01:04		06:44	20	23:44
BLI	00:13	00:33	00:53		04:13		23:53	00:13		01:13	NV	04:53		23:53	00:13		01:13	NV	06:53		23:53
BHH	00:27	00:47	01:06	04:07	04:27		00:07	00:27		01:27		05:07		00:07	00:27		01:27		07:07		00:07
BWAB	00:29	00:49		04:09	04:29		00:09	00:29		01:29		05:09		00:09	00:29		01:29		07:09		00:09

S75 TI (Mo-Fr)							S75 TI (Sa)				S75 TI (So)		
BWAB	05:06	20	08:06	20	13:46	20	20:46	08:46	20	19:26	19:46	10:46	20	19:46
BWRS	05:28		08:28		14:08		21:08	09:08		19:48	20:08	11:08		20:08
BOSB	05:30		08:30		14:10		21:10			19:50				

S75 TI (Mo-Fr)									S75 TI (Sa)					S75 TI (So)				
BOSB			05:34	20	08:34		14:14	20	20:34		08:34	08:54				10:34	10:54		
BWRS			05:37		08:37	20	14:17		20:37		08:37	08:57	20	19:37		10:37	10:57	20	19:37
BLI	05:03	20	05:43		08:43		14:23		20:43	08:23	08:43	09:03		19:43	10:23	10:43	11:03		19:43
BWAB	05:19		05:59		08:59		14:39		20:59	08:39	08:59	09:19		19:59	10:39	10:59	11:19		19:59

S8 N (Mo-Do)																	abends						S8 N (Fr)			
BZTH						05:20	20*	09:00					15:00	20*	18:00	20*	19:40						13:20	20*		
BGAS	00:08	00:28	00:48	04:08	20*	05:28		09:08	20*	13:08	13:28	20*	15:08		18:08		19:48	20:08	20	20:48	20	23:48	13:28		20*	19:48
BPKW	00:47	01:07	01:27	04:47		06:07		09:47		13:47	14:07		15:47		18:47		20:27	20:47		21:27		00:27	14:07			20:27
BBLB		01:12	01:32	04:52		06:12		09:52		13:52	14:12		15:52		18:52		20:32	20:52		21:32		00:32	14:12			20:32
BBIW				05:13		06:33		10:13		14:13	14:33		16:13		19:13		20:56	21:13		21:53	60	00:53	14:33			20:56

S8 N (Sa)									S8 N (So)											
BGAS	00:08	00:28	NV	04:18	04:48	20	06:48	20*	19:48	00:08	00:28	NV	04:48	30	06:48	20	07:48	20	08:28	20*	19:48
BPKW	00:47	01:07		04:57	05:27		07:27		20:27	00:47	01:07		05:27		07:27		08:27		09:07		20:27
BBLB	00:52	01:12		05:02	05:32		07:32		20:32	00:52	01:12		05:32		07:32		08:32		09:12		20:32
BBIW				05:23	05:53	60	07:53		20:56				05:53	60	07:53	60*	08:56		09:33		20:56

*: Die Fahrten zur Minute 32 ab Blankenburg halten zwei Minuten später in Hohen Neuendorf und drei Minuten später in Birkenwerder (Sa/So nur in geraden Stunden).

S8 N (Mo-Do)																			abends					S8 N (Fr)			
BBIW						04:24	20	07:44	20	11:44	12:04	20	13:44	20	16:44	20	18:24	20	20:24	20:44		21:24	60	23:24	12:04	20	20	18:24
BBLB	00:05	00:25		04:05	04:25	04:45		08:05		12:05	12:25		14:05		17:05		18:45		20:45	21:05	20	21:45	20	23:45	12:25			18:45
BPKW	00:10	00:30	00:50	04:10	04:30	04:50		08:10		12:10	12:30		14:10		17:10		18:50		20:50	21:10		21:50		23:50	12:30			18:50
BGAS	00:47	01:07	01:27	04:47	05:07	05:27		08:47		12:47	13:07		14:47		17:47		19:27		21:27	21:47		22:27		00:27	13:07			19:27
BZTH					05:15	05:35		08:55					14:55		17:55		19:35								13:15			

S8 N (Sa)									S8 N (So)														
BBIW			00:37		04:24	60	07:24	20	20:24			00:37		04:34		05:37		06:24	60	08:24		09:04	20	20:24
BBLB	00:05	00:25	00:58		04:45	20	07:45		20:45	00:05	00:25	00:58		04:55	05:25	05:58	06:25	06:45	20	08:45	20	09:25		20:45
BPKW	00:10	00:30	01:03	NV	04:50		07:50		20:50	00:10	00:30	01:03	NV	05:00	05:30	06:03	06:30	06:50		08:50		09:30		20:50
BGAS	00:47	01:07	01:40		05:27		08:27		21:27	00:47	01:07	01:40		05:37	06:07	06:40	07:07	07:27		09:27		10:07		21:27
BZTH																								

S85 NI (Mo-Fr)						S85 NI (Sa)			S85 NI (So)		
BPKW	05:20	20	18:20	20	21:20	08:00	20	21:20	10:00	20	21:20
BSW	05:48		18:48		21:48	08:28		21:48	10:28		21:48
BGAS	05:57		18:57								

S85 NI (Mo-Fr)								S85 NI (Sa)				S85 NI (So)					
BGAS		04:59	20	19:19				07:19	07:39					09:59	10:19		
BSW	04:49	05:08		19:28	19:49	20	20:49	07:29	07:49	20	20:49	09:29	20	10:09	10:29	20	20:49
BPKW	05:18	05:38		19:58	20:18		21:18	07:58	08:18		21:18	09:58		10:38	10:58		21:18

S9 C (Mo-Fr)										Fr	S9 C (Sa)								S9 C (So)						
BFLH	00:17	20	00:57	01:17			03:57	20	23:37	23:57	23:57	00:17	00:37	NV	04:32	04:57	20	23:37	23:57	00:17	00:37	NV	06:32	06:57	20	23:57
BSW	00:32		01:12	01:32		03:52	04:12		23:52	00:12	00:12	00:32	00:52		04:48	05:12		23:52	00:12	00:32	00:52		06:48	07:12		00:12
BLI	|		|	|	03:39	|	|		|	|	|	|	|		|	|		|	|	|	|		|	|		|
BOSB	00:49		01:29	01:48	03:49	04:09	04:29		00:09	00:29	00:29	00:49	01:09		05:08	05:29		00:09	00:29	00:49	01:09		07:08	07:29		00:29
BWKS	01:12		01:52		04:13	04:33	04:53		00:33	00:53	00:53	01:13	01:40		05:32	05:53		00:33	00:53	01:13	01:40		07:32	07:53		00:53
BSPA					04:27	04:47	05:07		00:47	01:07	01:09	01:27	01:54		05:46	06:07		00:47	01:09	01:27	01:54		07:46	08:07		01:07

S9 C (Mo-Fr)							S9 C (Sa)							S9 C (So)						
BSPA	00:18	00:38			03:58	20	23:58	00:18	00:38	NV	04:36	04:58	20	23:58	00:18	00:38	NV	06:36	06:58	20	23:58
BWKS	00:32	00:52	03:12	20	04:12		00:12	00:32	00:52		04:50	05:12		00:12	00:32	00:52		06:50	07:12		00:12
BSW	01:13	01:33	03:53		04:53		00:53	01:20	01:50		05:33	05:53		00:53	01:20	01:50		07:33	07:53		00:53
BFLH	01:29		04:09		05:09		01:09	01:36	02:06		05:49	06:09		01:09	01:36	02:06		07:49	08:09		01:09

U1 → Uhlandstraße (tagsüber)			(früh/abends)	(nachts)
WA	S U3 M BUS BUS	06 16 26 36 46 56	07 17 27 37 47 57	07 22 37 52
S	U3 BUS BUS	08 18 28 38 48 58	09 19 29 39 49 59	09 24 39 54
Gr	U3 M	10 20 30 40 50 00	11 21 31 41 51 01	11 26 41 56
Kbo	U3 U8 BUS	12 22 32 42 52 02	12 22 32 42 52 02	13 28 43 58
Pr	U3 BUS	14 24 34 44 54 04	14 24 34 44 54 04	15 30 45 00
Ho	U3 U6 M BUS BUS	16 26 36 46 56 06	16 26 36 46 56 06	17 32 47 02
Mo	U3 U7	17 27 37 47 57 07	18 28 38 48 58 08	18 33 48 03
Go	U2 U3	19 29 39 49 59 09	19 29 39 49 59 09	20 35 50 05
Kus	U3 M BUS	21 31 41 51 01 11	21 31 41 51 01 11	22 37 52 07
Nu	U2 U3 U4 M BUS BUS	22 32 42 52 02 12	23 33 43 53 03 13	23 38 53 08
Wt	U2 U3 M BUS	24 34 44 54 04 14	25 35 45 55 05 15	25 40 55 10
Kfo	U9 M X BUS BUS	26 36 46 56 06 16	27 37 47 57 07 17	27 42 57 12
U	M X BUS BUS	27 37 47 57 07 17	28 38 48 58 08 18	28 43 58 13

U1 → Warschauer Straße (tagsüber)			(früh/abends)	(nachts)
U	M X BUS BUS	00 10 20 30 40 50	00 10 20 30 40 50	02 17 32 47
Kfo	U9 M X BUS BUS	01 11 21 31 41 51	01 11 21 31 41 51	03 18 33 48
Wt	U2 U3 M BUS	02 12 22 32 42 52	02 12 22 32 42 52	04 19 34 49
Nm	U2 U3 U4 M BUS BUS	04 14 24 34 44 54	04 14 24 34 44 54	06 21 36 51
Kus	U3 M BUS	06 16 26 36 46 56	06 16 26 36 46 56	08 23 38 53
Go	U2 U3	08 18 28 38 48 58	08 18 28 38 48 58	10 25 40 55
Mo	U3 U7	09 19 29 39 49 59	09 19 29 39 49 59	11 26 41 56
Ho	U3 U6 M BUS BUS	11 21 31 41 51 01	11 21 31 41 51 01	13 28 43 58
Pr	U3 BUS	13 23 33 43 53 03	13 23 33 43 53 03	15 30 45 00
Kbo	U3 U8 BUS	15 25 35 45 55 05	15 25 35 45 55 05	19 34 49 04
Gr	U3 M	16 26 36 46 56 06	16 26 36 46 56 06	20 35 50 05
S	U3 BUS BUS	18 28 38 48 58 08	18 28 38 48 58 08	22 37 52 07
WA	S U3 M BUS BUS	20 30 40 50 00 10	20 30 40 50 00 10	24 39 54 09

U3 → Krumme Lanke		(Mo-Fr tagsüber)	(Sa-So)	(früh/abends)	(nachts)
WA	S U1 M BUS BUS	03 09 13 19 23 29 33 39 43 49 53 59	01 11 21 31 41 51		
S	U1 BUS BUS	05 11 15 21 25 31 35 41 45 51 55 01	03 13 23 33 43 53		
Gr	U1 M	07 13 17 23 27 33 37 43 47 53 57 03	05 15 25 35 45 55		
Kbo	U1 U8 BUS	09 15 19 25 29 35 39 45 49 55 59 05	07 17 27 37 47 57		
Pr	U1 BUS	11 17 21 27 31 37 41 47 51 57 01 07	09 19 29 39 49 59		
Ho	U1 U6 M BUS BUS	13 19 23 29 33 39 43 49 53 59 03 09	11 21 31 41 51 01		
Mo	U1 U7	14 20 24 30 34 40 44 50 54 00 04 10	12 22 32 42 52 02		
Go	U1 U2	16 22 26 32 36 42 46 52 56 02 06 12	14 24 34 44 54 04		
Kus	U1 M BUS	18 24 28 34 38 44 48 54 58 04 08 14	16 26 36 46 56 06		
Nu	U1 U2 U4 M BUS BUS	19 25 29 35 39 45 49 55 59 05 09 15	17 27 37 47 57 07	06 16 26 36 46 56	12 27 42 57
Wt	U1 U2 M BUS	21 27 31 37 41 47 51 57 01 07 11 17	19 29 39 49 59 09	08 18 28 38 48 58	14 29 44 59
Au		23 29 33 39 43 49 53 59 03 09 13 19	21 31 41 51 01 11	10 20 30 40 50 00	16 31 46 01
Sno	U9 BUS	24 30 34 40 44 50 54 00 04 10 14 20	22 32 42 52 02 12	11 21 31 41 51 01	17 32 47 02
Hz	BUS	26 32 36 42 46 52 56 02 06 12 16 22	24 34 44 54 04 14	13 23 33 43 53 03	19 34 49 04
Fpo	U7 BUS BUS	28 34 38 44 48 54 58 04 08 14 18 24	26 36 46 56 06 16	14 24 34 44 54 04	20 35 50 05
Hb	S BUS	30 36 40 46 50 56 00 06 10 16 20 26	28 38 48 58 08 18	16 26 36 46 56 06	22 37 52 07
Rd	BUS	31 37 41 47 51 57 01 07 11 17 21 27	29 39 49 59 09 19	18 28 38 48 58 08	24 39 54 09
Bt	BUS	33 39 43 49 53 59 03 09 13 19 23 29	31 41 51 01 11 21	19 29 39 49 59 09	25 40 55 10
Po		34 40 44 50 54 00 04 10 14 20 24 30	32 42 52 02 12 22	21 31 41 51 01 11	27 42 57 12
Dd	M X	36 42 46 52 56 02 06 12 16 22 26 32	34 44 54 04 14 24	22 32 42 52 02 12	28 43 58 13
T	BUS	38 44 48 54 58 04 08 14 18 24 28 34	36 46 56 06 16 26	24 34 44 54 04 14	30 45 00 15
Os	X BUS BUS	39 45 49 55 59 05 09 15 19 25 29 35	37 47 57 07 17 27	26 36 46 56 06 16	32 47 02 17
Ot	BUS	42 48 52 58 02 08 12 18 22 28 32 38	40 50 00 10 20 30	28 38 48 58 08 18	34 49 04 19
K	X BUS	44 50 54 00 04 10 14 20 24 30 34 40	42 52 02 12 22 32	30 40 50 00 10 20	36 51 06 21

U3 → Warschauer Str.		(Mo-Fr tagsüber)	(Sa-So)	(früh/abends)	(nachts)
K	X BUS	02 06 12 16 22 26 32 36 42 46 52 56	04 14 24 34 44 54	08 18 28 38 48 58	10 25 40 55
Ot	BUS	04 08 14 18 24 28 34 38 44 48 54 58	06 16 26 36 46 56	10 20 30 40 50 00	12 27 42 57
Os	X BUS BUS	06 10 16 20 26 30 36 40 46 50 56 00	08 18 28 38 48 58	12 22 32 42 52 02	14 29 44 59
T	BUS	08 12 18 22 28 32 38 42 48 52 58 02	10 20 30 40 50 00	14 24 34 44 54 04	15 30 45 00
Dd	M X	10 14 20 24 30 34 40 44 50 54 00 04	12 22 32 42 52 02	16 26 36 46 56 06	17 32 47 02
Po		12 16 22 26 32 36 42 46 52 56 02 06	14 24 34 44 54 04	17 27 37 47 57 07	19 34 49 04
Bt	BUS	14 18 24 28 34 38 44 48 54 58 04 08	16 26 36 46 56 06	19 29 39 49 59 09	20 35 50 05
Rd	BUS	15 19 25 29 35 39 45 49 55 59 05 09	17 27 37 47 57 07	20 30 40 50 00 10	22 37 52 07
Hb	S BUS	17 21 27 31 37 41 47 51 57 01 07 11	19 29 39 49 59 09	22 32 42 52 02 12	23 38 53 08
Fpo	U7 BUS BUS	19 23 29 33 39 43 49 53 59 03 09 13	21 31 41 51 01 11	24 34 44 54 04 14	25 40 55 10
Hz	BUS	20 24 30 34 40 44 50 54 00 04 10 14	22 32 42 52 02 12	25 35 45 55 05 15	27 42 57 12
Sno	U9 BUS	22 26 32 36 42 46 52 56 02 06 12 16	24 34 44 54 04 14	27 37 47 57 07 17	29 44 59 14
Au		23 27 33 37 43 47 53 57 03 07 13 17	25 35 45 55 05 15	28 38 48 58 08 18	30 45 00 15
Wt	U1 U2 M BUS	25 29 35 39 45 49 55 59 05 09 15 19	27 37 47 57 07 17	30 40 50 00 10 20	32 47 02 17
Nm	U1 U2 U4 M BUS BUS	27 31 37 41 47 51 57 01 07 11 17 21	29 39 49 59 09 19	32 42 52 02 12 22	34 49 04 19
Kus	U1 M BUS	29 33 39 43 49 53 59 03 09 13 19 23	31 41 51 01 11 21		
Go	U1 U2	31 35 41 45 51 55 01 05 11 15 21 25	33 43 53 03 13 23		
Mo	U1 U7	32 36 42 46 52 56 02 06 12 16 22 26	34 44 54 04 14 24		
Ho	U1 U6 M BUS BUS	34 38 44 48 54 58 04 08 14 18 24 28	36 46 56 06 16 26		
Pr	U1 BUS	36 40 46 50 56 00 06 10 16 20 26 30	38 48 58 08 18 28		
Kbo	U1 U8 BUS	38 42 48 52 58 02 08 12 18 22 28 32	40 50 00 10 20 30		
Gr	U1 M	39 43 49 53 59 03 09 13 19 23 29 33	41 51 01 11 21 31		
S	U1 BUS BUS	41 45 51 55 01 05 11 15 21 25 31 35	43 53 03 13 23 33		
WA	S U1 M BUS BUS	43 47 53 57 03 07 13 17 23 27 33 37	45 55 05 15 25 35		

U2 → Ruhleben		(Mo-Fr HVZ)	(Mo-Fr NVZ,Sa-So,Ferien)	(früh/abends)	(nachts)
PA	S M Tram M X BUS BUS	03 07 11 15 19 23 27 31 35 39 43 47 51 55 59	04 09 14 19 24 29 34 39 44 49 54 59	04 14 24 34 44 54	09 24 39 54
VIN	M Tram BUS	04 08 12 16 20 24 28 32 36 40 44 48 52 56 00	05 10 15 20 25 30 35 40 45 50 55 00	06 16 26 36 46 56	11 26 41 56
Sh	S M	06 10 14 18 22 26 30 34 38 42 46 50 54 58 02	07 12 17 22 27 32 37 42 47 52 57 02	08 18 28 38 48 58	13 28 43 58
EB	M Tram	08 12 16 20 24 28 32 36 40 44 48 52 56 00 04	09 14 19 24 29 34 39 44 49 54 59 04	10 20 30 40 50 00	15 30 45 00
Sz		10 14 18 22 26 30 34 38 42 46 50 54 58 02 06	11 16 21 26 31 36 41 46 51 56 01 06	12 22 32 42 52 02	17 32 47 02
Lu	M BUS	12 16 20 24 28 32 36 40 44 48 52 56 00 04 08	13 18 23 28 33 38 43 48 53 58 03 08	13 23 33 43 53 03	18 33 48 03
A	Bahn S U5 U8 M M X BUS BUS	14 18 22 26 30 34 38 42 46 50 54 58 02 06 10	15 20 25 30 35 40 45 50 55 00 05 10	15 25 35 45 55 05	20 35 50 05
Ko		16 20 24 28 32 36 40 44 48 52 56 00 04 08 12	17 22 27 32 37 42 47 52 57 02 07 12	17 27 37 47 57 07	22 37 52 07
Mk	BUS	17 21 25 29 33 37 41 45 49 53 57 01 05 09 13	18 23 28 33 38 43 48 53 58 03 08 13	19 29 39 49 59 09	24 39 54 09
Sp	M BUS BUS	19 23 27 31 35 39 43 47 51 55 59 03 07 11 15	20 25 30 35 40 45 50 55 00 05 10 15	20 30 40 50 00 10	25 40 55 10
Hv		21 25 29 33 37 41 45 49 53 57 01 05 09 13 17	22 27 32 37 42 47 52 57 02 07 12 17	22 32 42 52 02 12	27 42 57 12
Mi	U6 M BUS	23 27 31 35 39 43 47 51 55 59 03 07 11 15 19	24 29 34 39 44 49 54 59 04 09 14 19	24 34 44 54 04 14	29 44 59 14
MH	M BUS	24 28 32 36 40 44 48 52 56 00 04 08 12 16 20	25 30 35 40 45 50 55 00 05 10 15 20	25 35 45 55 05 15	30 45 00 15
Pd	Bahn S M BUS	25 29 33 37 41 45 49 53 57 01 05 09 13 17 21	26 31 36 41 46 51 56 01 06 11 16 21	27 37 47 57 07 17	32 47 02 17
MB	M	27 31 35 39 43 47 51 55 59 03 07 11 15 19 23	28 33 38 43 48 53 58 03 08 13 18 23	28 38 48 58 08 18	33 48 03 18
Gu	U1 U3	28 32 36 40 44 48 52 56 00 04 08 12 16 20 24	29 34 39 44 49 54 59 04 09 14 19 24	30 40 50 00 10 20	35 50 05 20
Bs	M BUS	30 34 38 42 46 50 54 58 02 06 10 14 18 22 26	31 36 41 46 51 56 01 06 11 16 21 26	32 42 52 02 12 22	37 52 07 22
No	U1 U3 U4 M BUS BUS	32 36 40 44 48 52 56 00 04 08 12 16 20 24 28	33 38 43 48 53 58 03 08 13 18 23 28	33 43 53 03 13 23	38 53 08 23
Wt	U1 U3 M BUS	33 37 41 45 49 53 57 01 05 09 13 17 21 25 29	34 39 44 49 54 59 04 09 14 19 24 29	35 45 55 05 15 25	40 55 10 25
Zo	Bahn S U9 M X BUS BUS	36 40 44 48 52 56 00 04 08 12 16 20 24 28 32	37 42 47 52 57 02 07 12 17 22 27 32	38 48 58 08 18 28	45 00 15 30
RP	M X BUS	37 41 45 49 53 57 01 05 09 13 17 21 25 29 33	38 43 48 53 58 03 08 13 18 23 28 33	39 49 59 09 19 29	46 01 16 31
Obi		39 43 47 51 55 59 03 07 11 15 19 23 27 31 35	40 45 50 55 00 05 10 15 20 25 30 35	41 51 01 11 21 31	48 03 18 33
Bmo	U7	40 44 48 52 56 00 04 08 12 16 20 24 28 32 36	41 46 51 56 01 06 11 16 21 26 31 36	42 52 02 12 22 32	49 04 19 34
So	BUS	42 46 50 54 58 02 06 10 14 18 22 26 30 34 38	43 48 53 58 03 08 13 18 23 28 33 38	44 54 04 14 24 34	51 06 21 36
Kd	S BUS	43 47 51 55 59 03 07 11 15 19 23 27 31 35 39	44 49 54 59 04 09 14 19 24 29 34 39	45 55 05 15 25 35	52 07 22 37
Th	M X BUS BUS	45 49 53 57 01 05 09 13 17 21 25 29 33 37 41	46 51 56 01 06 11 16 21 26 31 36 41	47 57 07 17 27 37	54 09 24 39
Nd/u	BUS	51 59 03 11 19 27 35 43	53 03 13 23 33 43	49 59 09 19 29 39	56 11 26 41
Nd/g	BUS	47 55 07 15 23 31 39	53 03 13 23 33 43	49 59 09 19 29 39	56 11 26 41
Sd/u		52 04 12 20 28 36 44	54 04 14 24 34 44	50 00 10 20 30 40	57 12 27 42
Sd/g		48 56 00 08 16 24 32 40	54 04 14 24 34 44	50 00 10 20 30 40	57 12 27 42
Rl/u	M BUS	54 06 14 22 30 38 46	56 06 16 26 36 46	52 02 12 22 32 42	59 14 29 44
Rl/g	M BUS	50 58 02 10 18 26 34 42	56 06 16 26 36 46	52 02 12 22 32 42	59 14 29 44

U2 → Pankow		(Mo-Fr HVZ)	(Mo-Fr NVZ,Sa-So,Ferien)	(früh/abends)	(nachts)
Rl/u	M BUS	03 11 19 27 35 43 51 59	03 13 23 33 43 53	03 13 23 33 43 53	13 28 43 58
Rl/g	M BUS	07 15 23 31 39 47 55	03 13 23 33 43 53	03 13 23 33 43 53	13 28 43 58
Sd/u		05 13 21 29 37 45 53	05 15 25 35 45 55	05 15 25 35 45 55	15 30 45 00
Sd/g		09 17 25 33 41 49 57 01	05 15 25 35 45 55	05 15 25 35 45 55	15 30 45 00
Nd/u	BUS	07 15 23 31 39 47 55	07 17 27 37 47 57	06 16 26 36 46 56	16 31 46 01
Nd/g	BUS	11 19 27 35 43 51 59 03	07 17 27 37 47 57	06 16 26 36 46 56	16 31 46 01
Th	M X BUS BUS	09 13 17 21 25 29 33 37 41 45 49 53 57 01 05	04 09 14 19 24 29 34 39 44 49 54 59	08 18 28 38 48 58	18 33 48 03
Kd	S BUS	10 14 18 22 26 30 34 38 42 46 50 54 58 02 06	05 10 15 20 25 30 35 40 45 50 55 00	10 20 30 40 50 00	20 35 50 05
So	BUS	12 16 20 24 28 32 36 40 44 48 52 56 00 04 08	07 12 17 22 27 32 37 42 47 52 57 02	11 21 31 41 51 01	21 36 51 06
Bmo	U7	13 17 21 25 29 33 37 41 45 49 53 57 01 05 09	08 13 18 23 28 33 38 43 48 53 58 03	13 23 33 43 53 03	23 38 53 08
Obi		14 18 22 26 30 34 38 42 46 50 54 58 02 06 10	09 14 19 24 29 34 39 44 49 54 59 04	14 24 34 44 54 04	24 39 54 09
RP	M X BUS	16 20 24 28 32 36 40 44 48 52 56 00 04 08 12	11 16 21 26 31 36 41 46 51 56 01 06	16 26 36 46 56 06	26 41 56 11
Zo	Bahn S U9 M X BUS BUS	18 22 26 30 34 38 42 46 50 54 58 02 06 10 14	13 18 23 28 33 38 43 48 53 58 03 08	18 28 38 48 58 08	30 45 00 15
Wt	U1 U3 M BUS	20 24 28 32 36 40 44 48 52 56 00 04 08 12 16	15 20 25 30 35 40 45 50 55 00 05 10	21 31 41 51 01 11	32 47 02 17
No	U1 U3 U4 M BUS BUS	22 26 30 34 38 42 46 50 54 58 02 06 10 14 18	17 22 27 32 37 42 47 52 57 02 07 12	22 32 42 52 02 12	33 48 03 18
Bs	M BUS	23 27 31 35 39 43 47 51 55 59 03 07 11 15 19	18 23 28 33 38 43 48 53 58 03 08 13	24 34 44 54 04 14	35 50 05 20
Gu	U1 U3	25 29 33 37 41 45 49 53 57 01 05 09 13 17 21	20 25 30 35 40 45 50 55 00 05 10 15	26 36 46 56 06 16	37 52 07 22
MB	M	27 31 35 39 43 47 51 55 59 03 07 11 15 19 23	22 27 32 37 42 47 52 57 02 07 12 17	27 37 47 57 07 17	38 53 08 23
Pd	Bahn S M BUS	28 32 36 40 44 48 52 56 00 04 08 12 16 20 24	23 28 33 38 43 48 53 58 03 08 13 18	29 39 49 59 09 19	40 55 10 25
MH	M BUS	30 34 38 42 46 50 54 58 02 06 10 14 18 22 26	25 30 35 40 45 50 55 00 05 10 15 20	30 40 50 00 10 20	41 56 11 26
Mi	U6 M BUS	31 35 39 43 47 51 55 59 03 07 11 15 19 23 27	26 31 36 41 46 51 56 01 06 11 16 21	31 41 51 01 11 21	42 57 12 27
Hv		32 36 40 44 48 52 56 00 04 08 12 16 20 24 28	27 32 37 42 47 52 57 02 07 12 17 22	33 43 53 03 13 23	44 59 14 29
Sp	M BUS BUS	34 38 42 46 50 54 58 02 06 10 14 18 22 26 30	29 34 39 44 49 54 59 04 09 14 19 24	34 44 54 04 14 24	45 00 15 30
Mk	BUS	35 39 43 47 51 55 59 03 07 11 15 19 23 27 31	30 35 40 45 50 55 00 05 10 15 20 25	35 45 55 05 15 25	46 01 16 31
Ko		36 40 44 48 52 56 00 04 08 12 16 20 24 28 32	31 36 41 46 51 56 01 06 11 16 21 26	37 47 57 07 17 27	48 03 18 33
A	Bahn S U5 U8 M M X BUS BUS	38 42 46 50 54 58 02 06 10 14 18 22 26 30 34	33 38 43 48 53 58 03 08 13 18 23 28	39 49 59 09 19 29	50 05 20 35
Lu	M BUS	40 44 48 52 56 00 04 08 12 16 20 24 28 32 36	35 40 45 50 55 00 05 10 15 20 25 30	41 51 01 11 21 31	52 07 22 37
Sz		42 46 50 54 58 02 06 10 14 18 22 26 30 34 38	37 42 47 52 57 02 07 12 17 22 27 32	42 52 02 12 22 32	53 08 23 38
EB	M Tram	44 48 52 56 00 04 08 12 16 20 24 28 32 36 40	39 44 49 54 59 04 09 14 19 24 29 34	44 54 04 14 24 34	55 10 25 40
Sh	S M	46 50 54 58 02 06 10 14 18 22 26 30 34 38 42	41 46 51 56 01 06 11 16 21 26 31 36	46 56 06 16 26 36	57 12 27 42
VIN	M Tram BUS	48 52 56 00 04 08 12 16 20 24 28 32 36 40 44	43 48 53 58 03 08 13 18 23 28 33 38	49 59 09 19 29 39	00 15 30 45
PA	S M Tram M X BUS BUS	50 54 58 02 06 10 14 18 22 26 30 34 38 42 46	45 50 55 00 05 10 15 20 25 30 35 40	50 00 10 20 30 40	01 16 31 46

U5 → Alexanderplatz (Mo-Fr HVZ)			(Mo-Fr NVZ)						(früh/abends)			(nachts)	
Hö	Bus	00 – alle 4-5 min	05	15	25	35	45	55	05 15 25 35 45 55	05 20 35 50	
LL	Bus	02 – alle 4-5 min	07	17	27	37	47	57	07 17 27 37 47 57	07 22 37 52	
Hd	M Tram F Bus	04 – alle 4-5 min	09	19	29	39	49	59	09 19 29 39 49 59	09 24 39 54	
C	Bus	05 – alle 4-5 min	10	20	30	40	50	00	10 20 30 40 50 00	10 25 40 55	
GK	Bus	07 – alle 4-5 min	12	22	32	42	52	02	12 22 32 42 52 02	12 27 42 57	
KL	Bus Bus	08 – alle 4-5 min	08	13	18	23	28	33	38 43 48 53 58 03	13 23 33 43 53 03	13 28 43 58
Wh	S Bus Bus	11 – alle 4-5 min	11	16	21	26	31	36	41 46 51 56 01 06	16 26 36 46 56 06	16 31 46 01
E	F Bus Bus	13 – alle 4-5 min	13	18	23	28	33	38	43 48 53 58 03 08	18 28 38 48 58 08	18 33 48 03
Bü		15 – alle 4-5 min	15	20	25	30	35	40	45 50 55 00 05 10	20 30 40 50 00 10	20 35 50 05
Tk	M Tram Bus Bus	17 – alle 4-5 min	17	22	27	32	37	42	47 52 57 02 07 12	22 32 42 52 02 12	23 38 53 08
Fi	Bus Bus	19 – alle 4-5 min	19	24	29	34	39	44	49 54 59 04 09 14	24 34 44 54 04 14	25 40 55 10
Li	◆S Tram Bus Bus	21 – alle 4-5 min	21	26	31	36	41	46	51 56 01 06 11 16	26 36 46 56 06 16	27 42 57 12
Md	Bus Bus	23 – alle 4-5 min	23	28	33	38	43	48	53 58 03 08 13 18	28 38 48 58 08 18	28 43 58 13
Ff	S M Tram	24 – alle 4-5 min	24	29	34	39	44	49	54 59 04 09 14 19	29 39 49 59 09 19	30 45 00 15
Sa		26 – alle 4-5 min	26	31	36	41	46	51	56 01 06 11 16 21	31 41 51 01 11 21	31 46 01 16
Ft	M Tram	27 – alle 4-5 min	27	32	37	42	47	52	57 02 07 12 17 22	32 42 52 02 12 22	33 48 03 18
WR	Bus	28 – alle 4-5 min	28	33	38	43	48	53	58 03 08 13 18 23	33 43 53 03 13 23	34 49 04 19
Sr	Bus	30 – alle 4-5 min	30	35	40	45	50	55	00 05 10 15 20 25	35 45 55 05 15 25	35 50 05 20
Si		31 – alle 4-5 min	31	36	41	46	51	56	01 06 11 16 21 26	36 46 56 06 16 26	37 52 07 22
Al	◆S U2 U8 M F Bus Bus	33 – alle 4-5 min	33	38	43	48	53	58	03 08 13 18 23 28	38 48 58 08 18 28	38 53 08 23

U5 → Hönow (Mo-Fr HVZ)			(Mo-Fr NVZ)						(früh/abends)			(nachts)	
Al	◆S U2 U8 M F Bus Bus	00 – alle 4-5 min	01	06	11	16	21	26	31 36 41 46 51 56	06 16 26 36 46 56	05 20 35 50		
Si		02 – alle 4-5 min	03	08	13	18	23	28	33 38 43 48 53 58	08 18 28 38 48 58	07 22 37 52		
Sr	Bus	04 – alle 4-5 min	05	10	15	20	25	30	35 40 45 50 55 00	10 20 30 40 50 00	08 23 38 53		
WR	Bus	05 – alle 4-5 min	06	11	16	21	26	31	36 41 46 51 56 01	11 21 31 41 51 01	10 25 40 55		
Ft	M Tram	06 – alle 4-5 min	07	12	17	22	27	32	37 42 47 52 57 02	12 22 32 42 52 02	11 26 41 56		
Sa		08 – alle 4-5 min	09	14	19	24	29	34	39 44 49 54 59 04	14 24 34 44 54 04	12 27 42 57		
Ff	S M Tram	09 – alle 4-5 min	10	15	20	25	30	35	40 45 50 55 00 05	15 25 35 45 55 05	14 29 44 59		
Md	Bus Bus	11 – alle 4-5 min	12	17	22	27	32	37	42 47 52 57 02 07	17 27 37 47 57 07	15 30 45 00		
Li	◆S Tram Bus Bus	12 – alle 4-5 min	13	18	23	28	33	38	43 48 53 58 03 08	18 28 38 48 58 08	17 32 47 02		
Fi	Bus Bus	14 – alle 4-5 min	15	20	25	30	35	40	45 50 55 00 05 10	20 30 40 50 00 10	19 34 49 04		
Tk	M Tram Bus Bus	16 – alle 4-5 min	17	22	27	32	37	42	47 52 57 02 07 12	22 32 42 52 02 12	21 36 51 06		
Bü		19 – alle 4-5 min	20	25	30	35	40	45	50 55 00 05 10 15	25 35 45 55 05 15	23 38 53 08		
E	F Bus Bus	21 – alle 4-5 min	22	27	32	37	42	47	52 57 02 07 12 17	27 37 47 57 07 17	25 40 55 10		
Wh	S Bus Bus	23 – alle 4-5 min	24	29	34	39	44	49	54 59 04 09 14 19	29 39 49 59 09 19	28 43 58 13		
KL	Bus Bus	25 – alle 4-5 min	26	31	36	41	46	51	56 01 06 11 16 21	31 41 51 01 11 21	30 45 00 15		
GK	Bus	27 – alle 4-5 min	33	43	53	03	13	23	33 43 53 03 13 23	32 47 02 17			
C	Bus	28 – alle 4-5 min	34	44	54	04	14	24	34 44 54 04 14 24	33 48 03 18			
Hd	M Tram F Bus	30 – alle 4-5 min	36	46	56	06	16	26	36 46 56 06 16 26	35 50 05 20			
LL	Bus	31 – alle 4-5 min	37	47	57	07	17	27	37 47 57 07 17 27	36 51 06 21			
Hö	Bus	33 – alle 4-5 min	39	49	59	09	19	29	39 49 59 09 19 29	38 53 08 23			

U4 → Innsbrucker Pl. (Mo-Sa HVZ)			(NVZ)		
Nm	U1 U2 U3 M Bus Bus	00 05 10 15 20 25 30 35 40 45 50 55	06 16 26 36 46 56		
V		02 07 12 17 22 27 32 37 42 47 52 57	08 18 28 38 48 58		
Bpo	U7	03 08 13 18 23 28 33 38 43 48 53 58	09 19 29 39 49 59		
RS	M Bus Bus	05 10 15 20 25 30 35 40 45 50 55 00	11 21 31 41 51 01		
Ip	S M Bus	06 11 16 21 26 31 36 41 46 51 56 01	12 22 32 42 52 02		

U4 → Nollendorfplatz (Mo-Sa HVZ)			(NVZ)		
Ip	S M Bus	01 06 11 16 21 26 31 36 41 46 51 56	06 16 26 36 46 56		
RS	M Bus Bus	02 07 12 17 22 27 32 37 42 47 52 57	07 17 27 37 47 57		
Bpo	U7	03 08 13 18 23 28 33 38 43 48 53 58	08 18 28 38 48 58		
V		05 10 15 20 25 30 35 40 45 50 55 00	10 20 30 40 50 00		
Nm	U1 U2 U3 M Bus Bus	07 12 17 22 27 32 37 42 47 52 57 02	12 22 32 42 52 02		

U6 → Mariendorf (Mo-Fr HVZ)			(Mo-Fr NVZ)						(früh/abends)			(nachts)	
Tg	Bus Bus	00 – alle 4-5 min	02	07	12	17	22	27	32 37 42 47 52 57	03 13 23 33 43 53	05 20 35 50		
Bk	Bus	01 – alle 4-5 min	03	08	13	18	23	28	33 38 43 48 53 58	05 15 25 35 45 55	07 22 37 52		
Hh	F Bus Bus	03 – alle 4-5 min	05	10	15	20	25	30	35 40 45 50 55 00	06 16 26 36 46 56	08 23 38 53		
OTI		04 – alle 4-5 min	06	11	16	21	26	31	36 41 46 51 56 01	07 17 27 37 47 57	09 24 39 54		
Scha	Bus	05 – alle 4-5 min	07	12	17	22	27	32	37 42 47 52 57 02	09 19 29 39 49 59	11 26 41 56		
Sch	M F Bus	07 – alle 4-5 min	09	14	19	24	29	34	39 44 49 54 59 04	10 20 30 40 50 00	12 27 42 57		
Afr	Bus	08 – alle 4-5 min	10	15	20	25	30	35	40 45 50 55 00 05	12 22 32 42 52 02	14 29 44 59		
Rb		09 – alle 4-5 min	11	16	21	26	31	36	41 46 51 56 01 06	13 23 33 43 53 03	15 30 45 00		
Se	M Tram Bus Bus	11 – alle 4-5 min	13	18	23	28	33	38	43 48 53 58 03 08	15 25 35 45 55 05	17 32 47 02		
Lpo	U9 Bus Bus	13 – alle 4-5 min	15	20	25	30	35	40	45 50 55 00 05 10	16 26 36 46 56 06	20 35 50 05		
We	S M Bus Bus	14 – alle 4-5 min	16	21	26	31	36	41	46 51 56 01 06 11	17 27 37 47 57 07	21 36 51 06		
Ri	M Bus Bus	15 – alle 4-5 min	17	22	27	32	37	42	47 52 57 02 07 12	18 28 38 48 58 08	22 37 52 07		
Sk		16 – alle 4-5 min	18	23	28	33	38	43	48 53 58 03 08 13	20 30 40 50 00 10	23 38 53 08		
NA	M Tram Bus	17 – alle 4-5 min	19	24	29	34	39	44	49 54 59 04 09 14	21 31 41 51 01 11	24 39 54 09		
Ob	M Tram	19 – alle 4-5 min	21	26	31	36	41	46	51 56 01 06 11 16	22 32 42 52 02 12	26 41 56 11		
F	◆S M Tram Bus	20 – alle 4-5 min	22	27	32	37	42	47	52 57 02 07 12 17	26 36 46 56 06 16	27 42 57 12		
Fr	Bus	21 – alle 4-5 min	23	28	33	38	43	48	53 58 03 08 13 18	27 37 47 57 07 17	28 43 58 13		
Mic	U2 M Bus	23 – alle 4-5 min	25	30	35	40	45	50	55 00 05 10 15 20	28 38 48 58 08 18	30 45 00 15		
Ks	M	24 – alle 4-5 min	26	31	36	41	46	51	56 01 06 11 16 21	30 40 50 00 10 20	31 46 01 16		
Hu	U1 U3 M Bus Bus	25 – alle 4-5 min	27	32	37	42	47	52	57 02 07 12 17 22	31 41 51 01 11 21	32 47 02 17		
Me	U7 M Bus Bus	27 – alle 4-5 min	29	34	39	44	49	54	59 04 09 14 19 24	33 43 53 03 13 23	34 49 04 19		
PL	Bus Bus	29 – alle 4-5 min	31	36	41	46	51	56	01 06 11 16 21 26	35 45 55 05 15 25	36 51 06 21		
Ps		30 – alle 4-5 min	32	37	42	47	52	57	02 07 12 17 22 27	36 46 56 06 16 26	37 52 07 22		
Ts	S Bus Bus	32 – alle 4-5 min	34	39	44	49	54	59	04 09 14 19 24 29	38 48 58 08 18 28	39 54 09 24		
At	M Bus Bus	33 – alle 4-5 min	35	40	45	50	55	00	05 10 15 20 25 30	39 49 59 09 19 29	40 55 10 25		
Ka	Bus	34 – alle 4-5 min	36	41	46	51	56	01	06 11 16 21 26 31	40 50 00 10 20 30	41 56 11 26		
Ull	Bus	35 – alle 4-5 min	37	42	47	52	57	02	07 12 17 22 27 32	41 51 01 11 21 31	42 57 12 27		
Wl	Bus	37 – alle 4-5 min	39	44	49	54	59	04	09 14 19 24 29 34	43 53 03 13 23 33	44 59 14 29		
Mf	M F Bus Bus	38 – alle 4-5 min	40	45	50	55	00	05	10 15 20 25 30 35	44 54 04 14 24 34	45 00 15 30		

U6 → Tegel (Mo-Fr HVZ)			(Mo-Fr NVZ)						(früh/abends)			(nachts)	
Mf	M F Bus Bus	00 – alle 4-5 min	01	06	11	16	21	26	31 36 41 46 51 56	06 16 26 36 46 56	13 28 43 58		
Wl	Bus	01 – alle 4-5 min	02	07	12	17	22	27	32 37 42 47 52 57	07 17 27 37 47 57	14 29 44 59		
Ull	Bus	03 – alle 4-5 min	03	08	13	18	23	28	33 38 43 48 53 58	09 19 29 39 49 59	15 30 45 00		
Ka	Bus	04 – alle 4-5 min	05	10	15	20	25	30	35 40 45 50 55 00	10 20 30 40 50 00	17 32 47 02		
At	M Bus Bus	05 – alle 4-5 min	06	11	16	21	26	31	36 41 46 51 56 01	11 21 31 41 51 01	18 33 48 03		
Ts	S Bus Bus	07 – alle 4-5 min	07	12	17	22	27	32	37 42 47 52 57 02	13 23 33 43 53 03	19 34 49 04		
Ps		08 – alle 4-5 min	09	14	19	24	29	34	39 44 49 54 59 04	14 24 34 44 54 04	21 36 51 06		
PL	Bus Bus	10 – alle 4-5 min	10	15	20	25	30	35	40 45 50 55 00 05	16 26 36 46 56 06	22 37 52 07		
Me	U7 M Bus Bus	12 – alle 4-5 min	12	17	22	27	32	37	42 47 52 57 02 07	18 28 38 48 58 08	24 39 54 09		
Hu	U1 U3 M Bus Bus	13 – alle 4-5 min	14	19	24	29	34	39	44 49 54 59 04 09	20 30 40 50 00 10	26 41 56 11		
Ks	M	15 – alle 4-5 min	15	20	25	30	35	40	45 50 55 00 05 10	21 31 41 51 01 11	27 42 57 12		
Mic	U2 M Bus	16 – alle 4-5 min	17	22	27	32	37	42	47 52 57 02 07 12	23 33 43 53 03 13	29 44 59 14		
Fr	Bus	17 – alle 4-5 min	18	23	28	33	38	43	48 53 58 03 08 13	24 34 44 54 04 14	30 45 00 15		
F	◆S M Tram Bus	19 – alle 4-5 min	19	24	29	34	39	44	49 54 59 04 09 14	25 35 45 55 05 15	31 46 01 16		
Ob	M Tram	20 – alle 4-5 min	20	25	30	35	40	45	50 55 00 05 10 15	26 36 46 56 06 16	32 47 02 17		
NA	M Tram U1	21 – alle 4-5 min	22	27	32	37	42	47	52 57 02 07 12 17	28 38 48 58 08 18	34 49 04 19		
Sk		22 – alle 4-5 min	23	28	33	38	43	48	53 58 03 08 13 18	29 39 49 59 09 19	35 50 05 20		
Ri	M U1 U3	24 – alle 4-5 min	24	29	34	39	44	49	54 59 04 09 14 19	30 40 50 00 10 20	36 51 06 21		
We	S M U1 U3	25 – alle 4-5 min	25	30	35	40	45	50	55 00 05 10 15 20	31 41 51 01 11 21	37 52 07 22		
Lpo	U9 Bus Bus	26 – alle 4-5 min	27	32	37	42	47	52	57 02 07 12 17 22	35 45 55 05 15 25	40 55 10 25		
Se	M Tram U1 U3	27 – alle 4-5 min	28	33	38	43	48	53	58 03 08 13 18 23	36 46 56 06 16 26	41 56 11 26		
Rb		29 – alle 4-5 min	29	34	39	44	49	54	59 04 09 14 19 24	37 47 57 07 17 27	43 58 13 28		
Afr	Bus	30 – alle 4-5 min	31	36	41	46	51	56	01 06 11 16 21 26	39 49 59 09 19 29	44 59 14 29		
Sch	M F Bus	31 – alle 4-5 min	32	37	42	47	52	57	02 07 12 17 22 27	40 50 00 10 20 30	45 00 15 30		
Scha	Bus	33 – alle 4-5 min	33	38	43	48	53	58	03 08 13 18 23 28	41 51 01 11 21 31	47 02 17 32		
OTI		34 – alle 4-5 min	35	40	45	50	55	00	05 10 15 20 25 30	43 53 03 13 23 33	48 03 18 33		
Hh	F U1 U3	35 – alle 4-5 min	36	41	46	51	56	01	06 11 16 21 26 31	44 54 04 14 24 34	49 04 19 34		
Bk	Bus	37 – alle 4-5 min	37	42	47	52	57	02	07 12 17 22 27 32	45 55 05 15 25 35	51 06 21 36		
Tg	Bus Bus	38 – alle 4-5 min	39	44	49	54	59	04	09 14 19 24 29 34	47 57 07 17 27 37	52 07 22 37		

U8 → Hermannstr. (Mo-Fr HVZ)			(Mo-Fr NVZ)						(früh/abends)			(nachts)	
WIU	S M F Bus Bus	01 06 11 16 21 26 31 36 41 46 51 56	06	16	26	36	46	56	08 18 28 38 48 58	04 19 34 49			
RR	F Bus	03 08 13 18 23 28 33 38 43 48 53 58	08	18	28	38	48	58	09 19 29 39 49 59	05 20 35 50			
KB	S M F	05 10 15 20 25 30 35 40 45 50 55 00	10	20	30	40	50	00	11 21 31 41 51 01	07 22 37 52			
LD	Bus	06 11 16 21 26 31 36 41 46 51 56 01	11	21	31	41	51	01	13 23 33 43 53 03	09 24 39 54			
PB	Bus Bus	07 12 17 22 27 32 37 42 47 52 57 02	07 12 17 22 27 32 37 42 47 52 57 02	14 24 34 44 54 04	10 25 40 55								
RE	Bus	09 14 19 24 29 34 39 44 49 54 59 04	09 14 19 24 29 34 39 44 49 54 59 04	15 25 35 45 55 05	11 26 41 56								
FN	Bus	10 15 20 25 30 35 40 45 50 55 00 05	10 15 20 25 30 35 40 45 50 55 00 05	17 27 37 47 57 07	13 28 43 58								
Olu	U9 M Tram Bus Bus	12 17 22 27 32 37 42 47 52 57 02 07	12 17 22 27 32 37 42 47 52 57 02 07	19 29 39 49 59 09	15 30 45 00								
Pk	M	14 19 24 29 34 39 44 49 54 59 04 09	14 19 24 29 34 39 44 49 54 59 04 09	20 30 40 50 00 10	16 31 46 01								
Gb	DB ◆S Bus	15 20 25 30 35 40 45 50 55 00 05 10	15 20 25 30 35 40 45 50 55 00 05 10	22 32 42 52 02 12	18 33 48 03								
Vo	Bus	17 22 27 32 37 42 47 52 57 02 07 12	17 22 27 32 37 42 47 52 57 02 07 12	23 33 43 53 03 13	19 34 49 04								
B	M Bus	18 23 28 33 38 43 48 53 58 03 08 13	18 23 28 33 38 43 48 53 58 03 08 13	25 35 45 55 05 15	21 36 51 06								
Ro	M Bus	20 25 30 35 40 45 50 55 00 05 10 15	20 25 30 35 40 45 50 55 00 05 10 15	26 36 46 56 06 16	22 37 52 07								
W	Bus	21 26 31 36 41 46 51 56 01 06 11 16	21 26 31 36 41 46 51 56 01 06 11 16	28 38 48 58 08 18	24 39 54 09								
Ap	◆S U2 U5 M F Bus Bus	23 28 33 38 43 48 53 58 03 08 13 18	23 28 33 38 43 48 53 58 03 08 13 18	30 40 50 00 10 20	26 41 56 11								
Jn	S Bus Bus	25 30 35 40 45 50 55 00 05 10 15 20	25 30 35 40 45 50 55 00 05 10 15 20	31 41 51 01 11 21	27 42 57 12								
He	Bus Bus	26 31 36 41 46 51 56 01 06 11 16 21	26 31 36 41 46 51 56 01 06 11 16 21	33 43 53 03 13 23	29 44 59 14								
Mr	M	28 33 38 43 48 53 58 03 08 13 18 23	28 33 38 43 48 53 58 03 08 13 18 23	34 44 54 04 14 24	30 45 00 15								
Kbu	U1 U3 Bus	30 35 40 45 50 55 00 05 10 15 20 25	30 35 40 45 50 55 00 05 10 15 20 25	36 46 56 06 16 26	34 49 04 19								
ST		31 36 41 46 51 56 01 06 11 16 21 26	31 36 41 46 51 56 01 06 11 16 21 26	38 48 58 08 18 28	35 50 05 20								
Hpo	U7 M Bus Bus	33 38 43 48 53 58 03 08 13 18 23 28	33 38 43 48 53 58 03 08 13 18 23 28	40 50 00 10 20 30	40 55 10 25								
Bo	Bus	35 40 45 50 55 00 05 10 15 20 25 30	35 40 45 50 55 00 05 10 15 20 25 30	41 51 01 11 21 31	41 56 11 26								
L		36 41 46 51 56 01 06 11 16 21 26 31	36 41 46 51 56 01 06 11 16 21 26 31	43 53 03 13 23 33	43 58 13 28								
HMS	S M Bus Bus	37 42 47 52 57 02 07 12 17 22 27 32	37 42 47 52 57 02 07 12 17 22 27 32	44 54 04 14 24 34	44 59 14 29								

U8 → Wittenau (Mo-Fr HVZ)			(Mo-Fr NVZ)						(früh/abends)			(nachts)	
HMS	S M Bus Bus	02 07 12 17 22 27 32 37 42 47 52 57	02 07 12 17 22 27 32 37 42 47 52 57	02 12 22 32 42 52	03 18 33 48								
L		04 09 14 19 24 29 34 39 44 49 54 59	04 09 14 19 24 29 34 39 44 49 54 59	04 14 24 34 44 54	04 19 34 49								
Bo	Bus	05 10 15 20 25 30 35 40 45 50 55 00	05 10 15 20 25 30 35 40 45 50 55 00	05 15 25 35 45 55	06 21 36 51								
Hpo	U7 M Bus Bus	07 12 17 22 27 32 37 42 47 52 57 02	07 12 17 22 27 32 37 42 47 52 57 02	07 17 27 37 47 57	07 22 37 52								
ST		09 14 19 24 29 34 39 44 49 54 59 04	09 14 19 24 29 34 39 44 49 54 59 04	09 19 29 39 49 59	09 24 39 54								
Kbu	U1 U3 Bus	11 16 21 26 31 36 41 46 51 56 01 06	11 16 21 26 31 36 41 46 51 56 01 06	11 21 31 41 51 01	11 26 41 56								
Mr	M	13 18 23 28 33 38 43 48 53 58 03 08	13 18 23 28 33 38 43 48 53 58 03 08	13 23 33 43 53 03	13 28 43 58								
He	Bus Bus	14 19 24 29 34 39 44 49 54 59 04 09	14 19 24 29 34 39 44 49 54 59 04 09	14 24 34 44 54 04	15 30 45 00								
Jn	S Bus Bus	15 20 25 30 35 40 45 50 55 00 05 10	15 20 25 30 35 40 45 50 55 00 05 10	15 25 35 45 55 05	16 31 46 01								
Ap	◆S U2 U5 M F Bus Bus	17 22 27 32 37 42 47 52 57 02 07 12	17 22 27 32 37 42 47 52 57 02 07 12	17 27 37 47 57 07	18 33 48 03								
W	Bus	19 24 29 34 39 44 49 54 59 04 09 14	19 24 29 34 39 44 49 54 59 04 09 14	19 29 39 49 59 09	19 34 49 04								
Ro	M Bus	20 25 30 35 40 45 50 55 00 05 10 15	20 25 30 35 40 45 50 55 00 05 10 15	20 30 40 50 00 10	21 36 51 06								
B	M Bus	22 27 32 37 42 47 52 57 02 07 12 17	22 27 32 37 42 47 52 57 02 07 12 17	22 32 42 52 02 12	22 37 52 07								
Vo	Bus	23 28 33 38 43 48 53 58 03 08 13 18	23 28 33 38 43 48 53 58 03 08 13 18	23 33 43 53 03 13	24 39 54 09								
Gb	DB ◆S Bus	25 30 35 40 45 50 55 00 05 10 15 20	25 30 35 40 45 50 55 00 05 10 15 20	25 35 45 55 05 15	25 40 55 10								
Pk	M	26 31 36 41 46 51 56 01 06 11 16 21	26 31 36 41 46 51 56 01 06 11 16 21	26 36 46 56 06 16	27 42 57 12								
Olu	U9 M Tram Bus Bus	28 33 38 43 48 53 58 03 08 13 18 23	28 33 38 43 48 53 58 03 08 13 18 23	28 38 48 58 08 18	28 43 58 13								
FN	Bus	30 35 40 45 50 55 00 05 10 15 20 25	30 35 40 45 50 55 00 05 10 15 20 25	30 40 50 00 10 20	30 45 00 15								
RE	Bus	31 36 41 46 51 56 01 06 11 16 21 26	31 36 41 46 51 56 01 06 11 16 21 26	31 41 51 01 11 21	31 46 01 16								
PB	Bus Bus	32 37 42 47 52 57 02 07 12 17 22 27	32 37 42 47 52 57 02 07 12 17 22 27	32 42 52 02 12 22	33 48 03 18								
LD	Bus	34 39 44 49 54 59 04 09 14 19 24 29	34 44 54 04 14 24	34 44 54 04 14 24	34 49 04 19								
KB	S M F	35 40 45 50 55 00 05 10 15 20 25 30	35 45 55 05 15 25	35 45 55 05 15 25	35 50 05 20								
RR	F Bus	37 42 47 52 57 02 07 12 17 22 27 32	37 47 57 07 17 27	37 47 57 07 17 27	37 52 07 22								
WIU	S M F Bus Bus	38 43 48 53 58 03 08 13 18 23 28 33	38 48 58 08 18 28	38 48 58 08 18 28	39 54 09 24								

U9 → Rath.Steglitz

Station	Umstieg	(Mo-Sa HVZ)	(Mo-Sa NVZ,So,Ferien)	(früh/abends)	(nachts)
Olo	U8 M Tram BUS BUS	01 05 09 13 17 21 25 29 33 37 41 45 49 53 57	01 06 11 16 21 26 31 36 41 46 51 56	01 11 21 31 41 51	01 16 31 46
Np	BUS	02 06 10 14 18 22 26 30 34 38 42 46 50 54 58	02 07 12 17 22 27 32 37 42 47 52 57	02 12 22 32 42 52	02 17 32 47
Lpu	U6 BUS BUS	03 07 11 15 19 23 27 31 35 39 43 47 51 55 59	03 08 13 18 23 28 33 38 43 48 53 58	03 13 23 33 43 53	04 19 34 49
Am	BUS	05 09 13 17 21 25 29 33 37 41 45 49 53 57 01	05 10 15 20 25 30 35 40 45 50 55 00	05 15 25 35 45 55	05 20 35 50
WF	S	06 10 14 18 22 26 30 34 38 42 46 50 54 58 02	06 11 16 21 26 31 36 41 46 51 56 01	06 16 26 36 46 56	07 22 37 52
Bi		07 11 15 19 23 27 31 35 39 43 47 51 55 59 03	07 12 17 22 27 32 37 42 47 52 57 02	07 17 27 37 47 57	08 23 38 53
Tm	M X BUS BUS	09 13 17 21 25 29 33 37 41 45 49 53 57 01 05	09 14 19 24 29 34 39 44 49 54 59 04	09 19 29 39 49 59	09 24 39 54
Ha	BUS BUS	10 14 18 22 26 30 34 38 42 46 50 54 58 02 06	10 15 20 25 30 35 40 45 50 55 00 05	10 20 30 40 50 00	11 26 41 56
Zu	Bahn S U2 M X BUS BUS	12 16 20 24 28 32 36 40 44 48 52 56 00 04 08	12 17 22 27 32 37 42 47 52 57 02 07	12 22 32 42 52 02	15 30 45 00
Kfu	U1 M X BUS BUS	14 18 22 26 30 34 38 42 46 50 54 58 02 06 10	14 19 24 29 34 39 44 49 54 59 04 09	14 24 34 44 54 04	16 31 46 01
Snu	U3 BUS	15 19 23 27 31 35 39 43 47 51 55 59 03 07 11	15 20 25 30 35 40 45 50 55 00 05 10	15 25 35 45 55 05	17 32 47 02
Gt		16 20 24 28 32 36 40 44 48 52 56 00 04 08 12	16 21 26 31 36 41 46 51 56 01 06 11	16 26 36 46 56 06	18 33 48 03
Beo	U7 BUS BUS	17 21 25 29 33 37 41 45 49 53 57 01 05 09 13	17 22 27 32 37 42 47 52 57 02 07 12	17 27 37 47 57 07	20 35 50 05
Bu	S BUS	19 23 27 31 35 39 43 47 51 55 59 03 07 11 15	19 24 29 34 39 44 49 54 59 04 09 14	19 29 39 49 59 09	21 36 51 06
Fw	BUS	20 24 28 32 36 40 44 48 52 56 00 04 08 12 16	20 25 30 35 40 45 50 55 00 05 10 15	20 30 40 50 00 10	23 38 53 08
Wsg	M X BUS BUS	21 25 29 33 37 41 45 49 53 57 01 05 09 13 17	21 26 31 36 41 46 51 56 01 06 11 16	21 31 41 51 01 11	24 39 54 09
Slu	M BUS	23 27 31 35 39 43 47 51 55 59 03 07 11 15 19	23 28 33 38 43 48 53 58 03 08 13 18	23 33 43 53 03 13	25 40 55 10
Rzu	S M X BUS	24 28 32 36 40 44 48 52 56 00 04 08 12 16 20	24 29 34 39 44 49 54 59 04 09 14 19	24 34 44 54 04 14	26 41 56 11

U9 → Osloer Str.

Station	Umstieg	(Mo-Sa HVZ)	(Mo-Sa NVZ,So,Ferien)	(früh/abends)	(nachts)
Rzu	S M X BUS	03 07 11 15 19 23 27 31 35 39 43 47 51 55 59	01 06 11 16 21 26 31 36 41 46 51 56	01 11 21 31 41 51	01 16 31 46
Slo	M BUS	04 08 12 16 20 24 28 32 36 40 44 48 52 56 00	02 07 12 17 22 27 32 37 42 47 52 57	02 12 22 32 42 52	02 17 32 47
Wsg	M X BUS BUS	05 09 13 17 21 25 29 33 37 41 45 49 53 57 01	03 08 13 18 23 28 33 38 43 48 53 58	03 13 23 33 43 53	04 19 34 49
Fw	BUS	06 10 14 18 22 26 30 34 38 42 46 50 54 58 02	04 09 14 19 24 29 34 39 44 49 54 59	04 14 24 34 44 54	05 20 35 50
Bu	S BUS	08 12 16 20 24 28 32 36 40 44 48 52 56 00 04	06 11 16 21 26 31 36 41 46 51 56 01	06 16 26 36 46 56	06 21 36 51
Beo	U7 BUS BUS	09 13 17 21 25 29 33 37 41 45 49 53 57 01 05	07 12 17 22 27 32 37 42 47 52 57 02	07 17 27 37 47 57	08 23 38 53
Gt		11 15 19 23 27 31 35 39 43 47 51 55 59 03 07	09 14 19 24 29 34 39 44 49 54 59 04	09 19 29 39 49 59	09 24 39 54
Snu	U3 BUS	12 16 20 24 28 32 36 40 44 48 52 56 00 04 08	10 15 20 25 30 35 40 45 50 55 00 05	10 20 30 40 50 00	10 25 40 55
Kfu	U1 M X BUS BUS	13 17 21 25 29 33 37 41 45 49 53 57 01 05 09	11 16 21 26 31 36 41 46 51 56 01 06	11 21 31 41 51 01	11 26 41 56
Zu	Bahn S U2 M X BUS BUS	14 18 22 26 30 34 38 42 46 50 54 58 02 06 10	12 17 22 27 32 37 42 47 52 57 02 07	12 22 32 42 52 02	15 30 45 00
Ha	BUS BUS	16 20 24 28 32 36 40 44 48 52 56 00 04 08 12	14 19 24 29 34 39 44 49 54 59 04 09	14 24 34 44 54 04	17 32 47 02
Tm	M X BUS BUS	18 22 26 30 34 38 42 46 50 54 58 02 06 10 14	16 21 26 31 36 41 46 51 56 01 06 11	16 26 36 46 56 06	18 33 48 03
Bi		19 23 27 31 35 39 43 47 51 55 59 03 07 11 15	17 22 27 32 37 42 47 52 57 02 07 12	17 27 37 47 57 07	20 35 50 05
WF	S	20 24 28 32 36 40 44 48 52 56 00 04 08 12 16	18 23 28 33 38 43 48 53 58 03 08 13	18 28 38 48 58 08	21 36 51 06
Am	BUS	22 26 30 34 38 42 46 50 54 58 02 06 10 14 18	20 25 30 35 40 45 50 55 00 05 10 15	20 30 40 50 00 10	22 37 52 07
Lpu	U6 BUS BUS	23 27 31 35 39 43 47 51 55 59 03 07 11 15 19	21 26 31 36 41 46 51 56 01 06 11 16	21 31 41 51 01 11	24 39 54 09
Np	BUS	25 29 33 37 41 45 49 53 57 01 05 09 13 17 21	23 28 33 38 43 48 53 58 03 08 13 18	23 33 43 53 03 13	25 40 55 10
Olo	U8 M Tram BUS BUS	26 30 34 38 42 46 50 54 58 02 06 10 14 18 22	24 29 34 39 44 49 54 59 04 09 14 19	24 34 44 54 04 14	26 41 56 11

U7 → Rudow

Station	Umstieg	(Mo-Fr HVZ)	(Mo-Fr NVZ,Sa-So,Ferien)	(früh/abends)	(nachts)
RSp	DB Bahn S M X BUS BUS	00 – alle 4-5 min	01 06 11 16 21 26 31 36 41 46 51 56	05 15 25 35 45 55	12 27 42 57
AS	X	01 – alle 4-5 min	02 07 12 17 22 27 32 37 42 47 52 57	06 16 26 36 46 56	13 28 43 58
Zi	X	02 – alle 4-5 min	04 09 14 19 24 29 34 39 44 49 54 59	07 17 27 37 47 57	15 30 45 00
Hs	X BUS BUS	04 – alle 4-5 min	06 11 16 21 26 31 36 41 46 51 56 01	09 19 29 39 49 59	17 32 47 02
P	BUS BUS	06 – alle 4-5 min	07 12 17 22 27 32 37 42 47 52 57 02	11 21 31 41 51 01	18 33 48 03
Rm	BUS BUS	07 – alle 4-5 min	09 14 19 24 29 34 39 44 49 54 59 04	12 22 32 42 52 02	20 35 50 05
Sie	BUS	09 – alle 4-5 min	10 15 20 25 30 35 40 45 50 55 00 05	14 24 34 44 54 04	21 36 51 06
Hl	BUS	10 – alle 4-5 min	12 17 22 27 32 37 42 47 52 57 02 07	15 25 35 45 55 05	23 38 53 08
JK	M X BUS	11 – alle 4-5 min	13 18 23 28 33 38 43 48 53 58 03 08	16 26 36 46 56 06	24 39 54 09
Jho	Bahn S M X BUS	13 – alle 4-5 min	14 19 24 29 34 39 44 49 54 59 04 09	18 28 38 48 58 08	25 40 55 10
Mp	M	14 – alle 4-5 min	16 21 26 31 36 41 46 51 56 01 06 11	19 29 39 49 59 09	27 42 57 12
Rw	M	16 – alle 4-5 min	17 22 27 32 37 42 47 52 57 02 07 12	21 31 41 51 01 11	28 43 58 13
Bmu	U2	17 – alle 4-5 min	19 24 29 34 39 44 49 54 59 04 09 14	24 34 44 54 04 14	30 45 00 15
Wd	Bahn S M X BUS	18 – alle 4-5 min	20 25 30 35 40 45 50 55 00 05 10 15	25 35 45 55 05 15	31 46 01 16
Ad	M X BUS BUS	20 – alle 4-5 min	21 26 31 36 41 46 51 56 01 06 11 16	26 36 46 56 06 16	32 47 02 17
Kn	BUS	21 – alle 4-5 min	22 27 32 37 42 47 52 57 02 07 12 17	27 37 47 57 07 17	33 48 03 18
Fpu	U3 BUS BUS	22 – alle 4-5 min	24 29 34 39 44 49 54 59 04 09 14 19	29 39 49 59 09 19	35 50 05 20
Bli	BUS BUS	24 – alle 4-5 min	25 30 35 40 45 50 55 00 05 10 15 20	30 40 50 00 10 20	36 51 06 21
Beu	U9 BUS BUS	25 – alle 4-5 min	26 31 36 41 46 51 56 01 06 11 16 21	31 41 51 01 11 21	39 54 09 24
Bpu	U4	26 – alle 4-5 min	28 33 38 43 48 53 58 03 08 13 18 23	33 43 53 03 13 23	41 56 11 26
Ei		27 – alle 4-5 min	29 34 39 44 49 54 59 04 09 14 19 24	34 44 54 04 14 24	42 57 12 27
Kt	M BUS	29 – alle 4-5 min	30 35 40 45 50 55 00 05 10 15 20 25	35 45 55 05 15 15	43 58 13 28
Y	S M	30 – alle 4-5 min	32 37 42 47 52 57 02 07 12 17 22 27	37 47 57 07 17 27	45 00 15 30
Mu	U1 U3	32 – alle 4-5 min	33 38 43 48 53 58 03 08 13 18 23 28	38 48 58 08 18 28	46 01 16 31
Me	U6 M BUS BUS	34 – alle 4-5 min	35 40 45 50 55 00 05 10 15 20 25 30	40 50 00 10 20 30	49 04 19 34
Gs	BUS	35 – alle 4-5 min	37 42 47 52 57 02 07 12 17 22 27 32	42 52 02 12 22 32	50 05 20 35
Sü		37 – alle 4-5 min	38 43 48 53 58 03 08 13 18 23 28 33	43 53 03 13 23 33	52 07 22 37
Hpu	U8 M BUS BUS	39 – alle 4-5 min	40 45 50 55 00 05 10 15 20 25 30 35	45 55 05 15 25 35	55 10 25 40
Rk	BUS BUS	40 – alle 4-5 min	42 47 52 57 02 07 12 17 22 27 32 37	47 57 07 17 27 37	56 11 26 41
KM		42 – alle 4-5 min	43 48 53 58 03 08 13 18 23 28 33 38	48 58 08 18 28 38	58 13 28 43
Nk	S BUS BUS	43 – alle 4-5 min	45 50 55 00 05 10 15 20 25 30 35 40	50 00 10 20 30 40	59 14 29 44
Gz	BUS	45 – alle 4-5 min	46 51 56 01 06 11 16 21 26 31 36 41	51 01 11 21 31 41	01 16 31 46
Bl	BUS	46 – alle 4-5 min	48 53 58 03 08 13 18 23 28 33 38 43	53 03 13 23 33 43	02 17 32 47
Pi	M	47 – alle 4-5 min	49 54 59 04 09 14 19 24 29 34 39 44	54 04 14 24 34 44	04 19 34 49
Br	M BUS	49 – alle 4-5 min	51 56 01 06 11 16 21 26 31 36 41 46	56 06 16 26 36 46	05 20 35 50
Jt	M X BUS	51 – alle 4-5 min	52 57 02 07 12 17 22 27 32 37 42 47	57 07 17 27 37 47	07 22 37 52
La	BUS	52 – alle 4-5 min	54 59 04 09 14 19 24 29 34 39 44 49	59 09 19 29 39 49	08 23 38 53
Wk		54 – alle 4-5 min	55 00 05 10 15 20 25 30 35 40 45 50	00 10 20 30 40 50	10 25 40 55
Zd	BUS	55 – alle 4-5 min	56 01 06 11 16 21 26 31 36 41 46 51	01 11 21 31 41 51	11 26 41 56
R	X BUS	56 – alle 4-5 min	58 03 08 13 18 23 28 33 38 43 48 53	03 13 23 33 43 53	12 27 42 57

U7 → Spandau

Station	Umstieg	(Mo-Fr HVZ)	(Mo-Fr NVZ,Sa-So,Ferien)	(früh/abends)	(nachts)
R	X BUS	00 – alle 4-5 min	00 05 10 15 20 25 30 35 40 45 50 55	05 15 25 35 45 55	01 16 31 46
Zd	BUS	02 – alle 4-5 min	02 07 12 17 22 27 32 37 42 47 52 57	06 16 26 36 46 56	03 18 33 48
Wk		03 – alle 4-5 min	03 08 13 18 23 28 33 38 43 48 53 58	07 17 27 37 47 57	04 19 34 49
La	BUS	04 – alle 4-5 min	04 09 14 19 24 29 34 39 44 49 54 59	09 19 29 39 49 59	05 20 35 50
Jt	M X BUS	06 – alle 4-5 min	06 11 16 21 26 31 36 41 46 51 56 01	10 20 30 40 50 00	07 22 37 52
Br	M BUS	08 – alle 4-5 min	08 13 18 23 28 33 38 43 48 53 58 03	12 22 32 42 52 02	09 24 39 54
Pi	M	09 – alle 4-5 min	09 14 19 24 29 34 39 44 49 54 59 04	13 23 33 43 53 03	10 25 40 55
Bl	BUS	10 – alle 4-5 min	10 15 20 25 30 35 40 45 50 55 00 05	15 25 35 45 55 05	11 26 41 56
Gz	BUS	12 – alle 4-5 min	12 17 22 27 32 37 42 47 52 57 02 07	17 27 37 47 57 07	13 28 43 58
Nk	S BUS BUS	14 – alle 4-5 min	14 19 24 29 34 39 44 49 54 59 04 09	18 28 38 48 58 08	15 30 45 00
KM		15 – alle 4-5 min	15 20 25 30 35 40 45 50 55 00 05 10	20 30 40 50 00 10	16 31 46 01
Rk	BUS BUS	16 – alle 4-5 min	16 21 26 31 36 41 46 51 56 01 06 11	21 31 41 51 01 11	17 32 47 02
Hpu	U8 M BUS BUS	18 – alle 4-5 min	18 23 28 33 38 43 48 53 58 03 08 13	22 32 42 52 02 12	19 34 49 04
Sü		20 – alle 4-5 min	20 25 30 35 40 45 50 55 00 05 10 15	24 34 44 54 04 14	21 36 51 06
Gs	BUS	21 – alle 4-5 min	21 26 31 36 41 46 51 56 01 06 11 16	26 36 46 56 06 16	22 37 52 07
Me	U6 M BUS BUS	23 – alle 4-5 min	23 28 33 38 43 48 53 58 03 08 13 18	28 38 48 58 08 18	25 40 55 10
Mu	U1 U3	25 – alle 4-5 min	25 30 35 40 45 50 55 00 05 10 15 20	29 39 49 59 09 19	26 41 56 11
Y	S M	26 – alle 4-5 min	26 31 36 41 46 51 56 01 06 11 16 21	31 41 51 01 11 21	28 43 58 13
Kt	M BUS	28 – alle 4-5 min	28 33 38 43 48 53 58 03 08 13 18 23	32 42 52 02 12 22	29 44 59 14
Ei		29 – alle 4-5 min	29 34 39 44 49 54 59 04 09 14 19 24	34 44 54 04 14 24	31 46 01 16
Bpu	U4	30 – alle 4-5 min	30 35 40 45 50 55 00 05 10 15 20 25	35 45 55 05 15 25	32 47 02 17
Beu	U9 BUS BUS	32 – alle 4-5 min	32 37 42 47 52 57 02 07 12 17 22 27	38 48 58 08 18 28	33 48 03 18
Bli	BUS BUS	33 – alle 4-5 min	33 38 43 48 53 58 03 08 13 18 23 28	39 49 59 09 19 29	34 49 04 19
Fpu	U3 BUS BUS	34 – alle 4-5 min	34 39 44 49 54 59 04 09 14 19 24 29	41 51 01 11 21 31	36 51 06 21
Kn	BUS	36 – alle 4-5 min	36 41 46 51 56 01 06 11 16 21 26 31	42 52 02 12 22 32	37 52 07 22
Ad	M X BUS BUS	37 – alle 4-5 min	37 42 47 52 57 02 07 12 17 22 27 32	43 53 03 13 23 33	38 53 08 23
Wd	Bahn S M X BUS	38 – alle 4-5 min	38 43 48 53 58 03 08 13 18 23 28 33	45 55 05 15 25 35	40 55 10 25
Bmu	U2	40 – alle 4-5 min	40 45 50 55 00 05 10 15 20 25 30 35	46 56 06 16 26 36	41 56 11 26
Rw	M	41 – alle 4-5 min	41 46 51 56 01 06 11 16 21 26 31 36	47 57 07 17 27 37	42 57 12 27
Mp	M	43 – alle 4-5 min	43 48 53 58 03 08 13 18 23 28 33 38	49 59 09 19 29 39	44 59 14 29
Jhu	Bahn S M X BUS	44 – alle 4-5 min	44 49 54 59 04 09 14 19 24 29 34 39	50 00 10 20 30 40	45 00 15 30
JK	M X BUS	45 – alle 4-5 min	45 50 55 00 05 10 15 20 25 30 35 40	52 02 12 22 32 42	47 02 17 32
Hl	BUS	47 – alle 4-5 min	47 52 57 02 07 12 17 22 27 32 37 42	53 03 13 23 33 43	48 03 18 33
Sie	BUS	48 – alle 4-5 min	48 53 58 03 08 13 18 23 28 33 38 43	55 05 15 25 35 45	50 05 20 35
Rm	BUS BUS	49 – alle 4-5 min	49 54 59 04 09 14 19 24 29 34 39 44	56 06 16 26 36 46	51 06 21 36
P	BUS BUS	51 – alle 4-5 min	51 56 01 06 11 16 21 26 31 36 41 46	58 08 18 28 38 48	53 08 23 38
Hs	X BUS BUS	53 – alle 4-5 min	53 58 03 08 13 18 23 28 33 38 43 48	59 09 19 29 39 49	54 09 24 39
Zi	X	54 – alle 4-5 min	54 59 04 09 14 19 24 29 34 39 44 49	01 11 21 31 41 51	56 11 26 41
AS	X	56 – alle 4-5 min	56 01 06 11 16 21 26 31 36 41 46 51	02 12 22 32 42 52	57 12 27 42
RSp	DB Bahn S M X BUS BUS	57 – alle 4-5 min	57 02 07 12 17 22 27 32 37 42 47 52	03 13 23 33 43 53	58 13 28 43

N1 → S+U Zoologischer Garten

Station	Umstieg	Zeiten
BWRS/WA	M M10	11 25 41 55
S	BUS N65	14 28 44 58
Gr	M M29	18 32 48 02
Kbo/Kbu	N8	20 34 50 04
Pr		21 35 51 05
Ho/Hu	M M41 BUS N42	26 37 56 07
Mehringbr.	N6 M M41	26 40 56 10
Mo/Mu		27 41 57 11
MB	M M29	29 43 59 13
Pdmr. Br.	N2 M M29 M48	30 44 00 14
Kus	N2 M M48	32 46 02 16
Bs	N2 M M19 M48	33 47 03 17
No/Nm/Nu	N2 M M19 BUS N26	34 48 04 18
Wt	N2 N3 M M19 M29 M46 BUS N26	37 51 07 21
Kfo/Kfu	N2 N3 N9 M M19 M29 M46 BUS N10 N26	54 24
BZOS/Zo/Zu	N2 N9 M M45 M46 M49 BUS N10 N26	56 26

N1 → S+U Warschauer Straße

Station	Umstieg	Zeiten
BZOS/Zo/Zu	N2 N9 M M45 M46 M49 BUS N10 N26	00 30
Kfo/Kfu	N2 N3 N9 M M19 M29 M46 BUS N10 N26	02 32
Wt	N2 N3 M M19 M29 M46 BUS N26	05 21 35 51
No/Nm/Nu	N2 M M19 BUS N26	08 24 38 54
Bs	N2 M M19 M48	09 25 39 55
Kus	N2 M M48	10 26 40 56
Pdmr. Br.	N2 M M29 M48	12 28 42 58
MB	M M29	13 29 43 59
Mo/Mu		15 31 45 01
Mehringbr.	N6 M M41	16 32 46 02
Ho/Hu	M M41 BUS N42	17 33 47 03
Pr		19 35 49 05
Kbo/Kbu	N8	20 36 50 06
Gr	M M29	22 38 52 08
S	BUS N65	25 41 55 11
BWRS/WA	M M10	28 44 58 14

N3 → S Mexikoplatz

Station	Umstieg	Zeiten
Wt	N1 N2 M M19 M29 M46 BUS N26	14 44
Kfo/Kfu	N1 N2 N9 M M19 M29 M46 BUS N10 N26	17 47
Sno/Snu	N9	20 50
Hz		21 51
Fpo/Fpu	N7 BUS N42	23 53
BHO	BUS N10	25 55
BHEI/Hb		27 57
Wiesbad. Str.		30 00
Bt		32 02
Rohlfsstr.		33 03
Dd	M M11	36 06
T		38 08
Os	BUS N10	42 12
Onk.-Tom-Str.		44 14
K		46 16
BMEX		48 18

N3 → U Wittenbergplatz

Station	Umstieg	Zeiten
BMEX		20 50
K		22 52
Onk.-Tom-Str.		24 54
Os	BUS N10	26 56
T		28 58
Dd	M M11	30 00
Rohlfsstr.		32 02
Bt		34 04
Wiesbad. Str.		36 06
BHEI/Hb		39 09
BHO	BUS N10	41 11
Fpo/Fpu	N7 BUS N42	47 17
Hz		49 19
Sno/Snu	N9	50 20
Kfo/Kfu	N1 N2 N9 M M19 M29 M46 BUS N10 N26	52 22
Wt	N1 N2 M M19 M29 M46 BUS N26	55 25

N2 → U Ruhleben

BPKW/PA	M1 M M27 N50	26 56
VIN	M1	29 59
Bornh.Str.	M1 M13	31 01
BSAL/Sh	M1	32 02
EB	M1 M10	35 05
Sz		38 08
Lu		40 10
W	N5 N8 M M1 N40 N42 N65	27 42 57 12
BHKM	N5 N8 M M1 M4 M5 N40 N42 N65	30 45 00 15
ULO/ULU	N6	34 49 04 19
MH		38 53 08 23
BPOP/Pd	M M41 M48	42 57 12 27
Pdmr. Br.	N1 M M29 M48	45 00 15 30
Kus	N1 M M48	47 02 17 32
Bs	N1 M M19 M48	48 03 18 33
No/Nm/Nu	N1 M M19 N26	49 04 19 34
Wt	N1 N3 M M19 M29 M46 N26	52 07 22 37
Kfo/Kfu	N1 N3 N9 M M19 M29 M46 N10 N26	55 10 25 40
BZOS/Zo/Zu	N1 N9 M M45 M46 M49 N10 N26	56 11 26 41
BZOS/Zo/Zu	N1 N9 M M45 M46 M49 N10 N26	15 45
RP	M M45	18 48
Obi		20 50
Bmo/Bmu	N7	24 54
So		26 56
Kd		27 57
Th	M M49 N42	30 00
Nd		32 02
Rl	M M45	36 06

N2 → S+U Pankow

Rl	M M45	21 51
Nd		25 55
Th	M M49 N42	27 57
Kd		28 58
So		30 00
Bmo/Bmu	N7	33 03
Obi		35 05
RP	M M45	37 07
BZOS/Zo/Zu	N1 N9 M M45 M46 M49 N10 N26	30 45 00 15
Kfo/Kfu	N1 N3 N9 M M19 M29 M46 N10 N26	32 47 02 17
Wt	N1 N3 M M19 M29 M46 N26	35 50 05 20
No/Nm/Nu	N1 M M19 N26	38 53 08 23
Bs	N1 M M19 M48	39 54 09 24
Kus	N1 M M48	40 55 10 25
Pdmr. Br.	N1 M M29 M48	42 57 12 27
BPOP/Pd	M M41 M48	45 00 15 30
MH		47 02 17 32
ULO/ULU	N6	50 05 20 35
BHKM	N5 N8 M M1 M4 M5 N40 N42 N65	55 10 25 40
BHKM	N5 N8 M M1 M4 M5 N40 N42 N65	15 45
W	N5 N8 M M1 N40 N42 N65	17 47
Lu		20 50
Sz		21 51
EB	M M1 M10	24 54
BSAL/Sh	M M1	27 57
Bornh. Str.	M M1 M13	28 58
VIN	M M1	30 00
BPKW/PA	M M1 M M27 N50	33 03

N6 → U Alt-Mariendorf

Tg	N22 N24 N25 N33	07 37
Bk		09 39
Hh	N33	11 41
Otisstraße		13 43
Scha		15 45
Sch	M M21	18 48
Afr		21 51
Rb		22 52
Se	M M13 N20 N26	25 55
Lpo/Lpu	N9 N20	28 58
BWED/WE	N20	29 59
Ri	M M27 N20	31 01
Sk		33 03
NA	M M10 N40	35 05
Ob	M M1	37 07
BFST/BFSTT/F	M M1	38 08
ULO/ULU	N2	40 10
Mic	M M48	41 11
Ks	M M29	43 13
Mehringbr.	N1 M M41	50 20
Me	N7 M M19 N42	53 23
Me	N7 M M19 N42	58 28
PL	N42	59 29
Ps		01 31
Ts	N84	02 32
At	M M46 N84	04 34
Ka		06 36
Ull		08 38
Wl		10 40
Mf (Alt-M'df)	M M76 M77 N79	12 42

N6 → U Alt-Tegel

Mf (Alt-M'df)	M M76 M77 N79	19 49
Wl		20 50
Ull		21 51
Ka		23 53
At	M M46 N84	25 55
Ts	N84	26 56
Ps		28 58
PL	N42	29 59
Me	N7 M M19 N42	36 06
Mehringbr.	N1 M M41	39 09
Ks	M M29	42 12
Mic	M M48	44 14
ULO/ULU	N2	46 16
BFST/BFSTT/F	M M1	48 18
Ob	M M1	50 20
NA	M M10 N40	52 22
Sk		53 23
Ri	M M27 N20	55 25
BWED/WE	N20	56 26
Lpo/Lpu	N9 N20	58 28
Lpo/Lpu	N9 N20	02 32
Se	M M13 N20 N26	04 34
Rb		08 38
Afr		09 39
Sch	M M21	13 43
Scha		17 47
Otisstraße		18 48
Hh	N33	20 50
Bk		22 52
Tg	N22 N24 N25 N33	24 54

N8 → S+U Hermannstraße

Wilhelmsr. D.	N24 N53	21 51
WIU	M M21 N24	25 55
RR		28 58
KB	M M21	31 01
LD		33 03
PB	N20	35 05
RE		38 08
FN		40 10
Olo/Olu	N9 M M13 N52	44 14
Pk	M M27	47 17
BGB/Gb		49 19
Vo		52 22
B	M M10 N40	53 23
Ro	M M1 N40	55 25
W	N2 N5 M M1 N40 N42 N65	56 26
BHKM	N2 N5 M M1 M4 M5 N40 N42 N65	57 27
BHKM	N2 N5 M M1 M4 M5 N40 N42 N65	00 30
BJB/Jn	N40 N65	04 34
He	N65	06 36
Mr	M M29	08 38
Kbo/Kbu (N)	N1	13 43
Kbo/Kbu (S)	N1	14 44
ST		16 46
Hpo/Hpu (W)	N7 M M29 M41 N94	18 48
Hpo/Hpu (W)	N7 M M29 M41 N94	18 48
Bo		19 49
L		21 51
HMS	M M44 N79	23 53

N8 → Wilhelmsruher Damm

HMS	M M44 N79	02 32
L		04 34
Bo		06 36
Hpo/Hpu (O)	N7 M M29 M41 N94	09 39
Hpo/Hpu (O)	N7 M M29 M41 N94	12 42
ST		14 44
Kbo/Kbu (S)	N1	16 46
Kbo/Kbu (N)	N1	17 47
Mr	M M29	19 49
He	N65	21 51
BJB/Jn	N40 N65	22 52
BHKM	N2 N5 M M1 M4 M5 N40 N42 N65	25 55
BHKM	N2 N5 M M1 M4 M5 N40 N42 N65	30 00
W	N2 N5 M M1 N40 N42 N65	31 01
Ro	M M1 N40	32 02
B	M M10 N40	35 05
Vo		36 06
BGB/Gb		38 08
Pk	M M27	40 10
Olo/Olu	N9 M M13 N52	44 14
FN		46 16
RE		48 18
PB	N20	51 21
LD		53 23
KB	M M21	55 25
RR		58 28
WIU	M M21 N24	01 31
Wilhelmsr. D.	N24 N53	07 37

N5 → S Hackescher Markt

Riesaer Str.	M M6 N95	11 41
Hö		14 44
LL		15 45
Hd	M M6	19 49
C		21 51
GK		23 53
KL	N91	26 56
BWT/Wh	N69 N90 N91 N95	29 59
BWT/Wh	N69 N90 N91 N95	31 46 01 16
Alt-Biesdorf		34 49 04 19
Rhinstr.	M M17	39 54 09 24
R.-Uhrig-Str.		40 55 10 25
Lichtenb. Br.	N50 N94	41 56 11 26
Md	N50 N56 N94	42 57 12 27
BFA/Ff	M M13	44 59 14 29
Sa		46 01 16 31
Ft	M M10	47 02 17 32
WR		49 04 19 34
Sr		51 06 21 36
Si		53 08 23 38
A/Al/Ap (U)	M M4 M5 N65	54 09 24 39
W	N2 N42	57 27
BALX (Memh.s)	M M2 M M48 N42	10 40
BALX (Liebk.)	M M48	11 41
BHKM	N2 N8 M M1 M4 M5 N40 N42 N65	12 42

N5 → Riesaer Straße

BHKM	N2 N8 M M1 M4 M5 N40 N42 N65	00 15 30 45
W	N2 N42	02 17 32 47
A/Al/Ap (U)	M M4 M5 N65	04 19 34 49
Si		06 21 36 51
Sr		08 23 38 53
WR		10 25 40 55
Ft	M M10	12 27 42 57
Sa		14 29 44 59
Ff	M M13	16 31 46 01
Md	N50 N56 N94	18 33 48 03
Lichtenb. Br.	N50 N94	19 34 49 04
R.-Uhrig-Str.		21 36 51 06
Rhinstr.	M M17	22 37 52 07
Alt-Biesdorf		27 42 57 12
BWT/Wh	N69 N90 N91 N95	31 46 01 16
KL	N91	35 05
GK		37 07
C		39 09
Hd	M M6	41 11
LL		45 15
Hö		46 16
Riesaer Str.	M M6 N95	48 18

N7 → Flughafen Schönefeld

			WE
BSPA/RSp	M32 M37 M45 N30 N34	08 38	
AS		10 40	
Zi		11 41	
Hs	N33	13 43	
P	N39	15 45	
Rm	N23 N39	17 47	
Sie		19 49	
Halemweg		21 51	
JK	M21	24 54	
BJUN/Jho/Jhu	M21 M27	26 56	
Mp	M27	28 58	
Rw	M45	30 00	
Bmo/Bmu	N2	32 02	
Ks-Friedr.-S.	M49	34 04	
BCHS		35 05	
Ad	M19 M29 N10	40 10	
Kn		43 13	
Fpo/Fpu	N3 N42	44 14	
Bli	N42	46 16	
Beo/Beu	N9 N42	53 23	
Bpo/Bpu		54 24	
Grunewaldstr.	M46	54 24	
Ei		55 25	
Kt	M48	57 27	
BGGS/Y	M19	59 29	
BYOR/Y	M19	00 30	
Großbeerenstr	M19	02 32	
Me	N6 M19 N42	03 33	
Gs		05 35	
Sü		08 38	
Hpo/Hpu (O)	N8 M29 M41 N94	11 41	
Hpo/Hpu (O)	N8 M29 M41 N94	13 43	
Hpo/Hpu (W)	N8 M29 M41 N94	14 44	
Hpo/Hpu (W)	N8 M29 M41 N94	18 48	
Rk	N94	20 50	
KM		22 52	
Nk	N79	24 54	
Gz		26 56	
Buschkrug		29 59	
Parchim. All.	M46	31 01	
Gutschmidtstr		34 04	
Johann. Ch.	M11	36 06	
Lipschitzall.	M11	38 08	
Wutzkyallee	M11	39 09	
Zwickauer D.	M11	40 10	
R		43 13	47 17
BFLH	N60	51 21	55 25
SXF ✈	N60	53 23	57 27

N7 → S+U Rathaus Spandau

			WE
SXF ✈	N60	06 36	03 33
BFLH	N60	08 38	05 35
R		15 45	12 42
Zwickauer D.	M11	17 47	
Wutzkyallee	M11	18 48	
Lipschitzall.	M11	19 49	
Johann. Ch.	M11	21 51	
Gutschmidtstr		23 53	
Parchim. All.	M46	26 56	
Buschkrug		28 58	
Gz		31 01	
Nk	N79	33 03	
KM		35 05	
Rk	N94	37 07	
Hpo/Hpu (O)	N8 M29 M41 N94	40 10	
Hpo/Hpu (O)	N8 M29 M41 N94	43 13	
Hpo/Hpu (W)	N8 M29 M41 N94	44 14	
Hpo/Hpu (W)	N8 M29 M41 N94	48 18	
Sü		51 21	
Gs		54 24	
Me	N6 M19 N42	56 26	
Großbeerenstr	M19	57 27	
BYOR/Y	M19	59 29	
BGGS/Y	M19	00 30	
Kt	M48	02 32	
Ei		04 34	
Grunewaldstr.	M46	05 35	
Bpo/Bpu		05 35	
Beo/Beu	N9 N42	07 37	
Bli	N42	10 40	
Fpo/Fpu	N3 N42	14 44	
Kn		15 45	
Ad	M19 M29 N10	17 47	
BCHS		18 48	
Ks-Friedr.-S.	M49	19 49	
Bmo/Bmu	N2	22 52	
Rw	M45	24 54	
Mp	M27	26 56	
BJUN/Jho/Jhu	M21 M27	28 58	
JK	M21	30 00	
Halemweg		33 03	
Sie		35 05	
Rm	N23 N39	37 07	
P	N39	39 09	
Hs	N33	44 14	
Zi		46 16	
AS		47 17	
BSPA/RSp	M32 M37 M45 N30 N34	50 20	

N9 → S+U Rathaus Steglitz

Olo/Olu	N8 M13 N52	06 21 36 51	
Np		09 24 39 54	
Lpo/Lpu	N6 N20	11 26 41 56	
Lpo/Lpu	N6 N20	11 29 41 59	
Am		13 31 43 01	
BWF/WF		15 33 45 03	
Bi		16 34 46 04	
Tm	M27 N40	17 35 47 05	
Tm	M27 N40	19 35 49 05	
Bachstraße		21 37 51 07	
BTGN		22 38 52 08	
BZOS/Zo/Zu	N1 N2 M45 M46 M49 N10 N26	26 42 56 12	
BZOS/Zo/Zu	N1 N2 M45 M46 M49 N10 N26	45 15	
Kfo/Kfu	N1 N2 N3 M19 M29 M46 N10 N26	47 17	
Sno/Snu	N3	50 20	
Gt		51 21	
Beo/Beu	N7 N42	53 23	
BBUP/Bu		56 26	
Fw		58 28	
Wsg	M48 M76 N81	01 31	
Slo/Slu	M48	02 32	
BRST/Rzu	M48 M82 M85 N88	05 35	

N9 → U Osloer Straße

BRST/Rzu	M48 M82 M85 N88	28 58	
Slo/Slu	M48	30 00	
Wsg	M48 M76 N81	32 02	
Fw		34 04	
BBUP/Bu		35 05	
Beo/Beu	N7 N42	38 08	
Gt		40 10	
Sno/Snu	N3	41 11	
Kfo/Kfu	N1 N2 N3 M19 M29 M46 N10 N26	43 13	
BZOS/Zo/Zu	N1 N2 M45 M46 M49 N10 N26	44 14	
BZOS/Zo/Zu	N1 N2 M45 M46 M49 N10 N26	30 45 00 15	
BTGN		33 48 03 18	
Bachstraße		34 49 04 19	
Tm	M27 N40	37 52 07 22	
Bi		39 54 09 24	
BWF/WF		40 55 10 25	
Am		42 57 12 27	
Lpo/Lpu	N6 N20	45 00 15 30	
Lpo/Lpu	N6 N20	45 02 15 32	
Np		47 04 17 34	
Olo/Olu	N8 M13 N52	50 07 20 37	

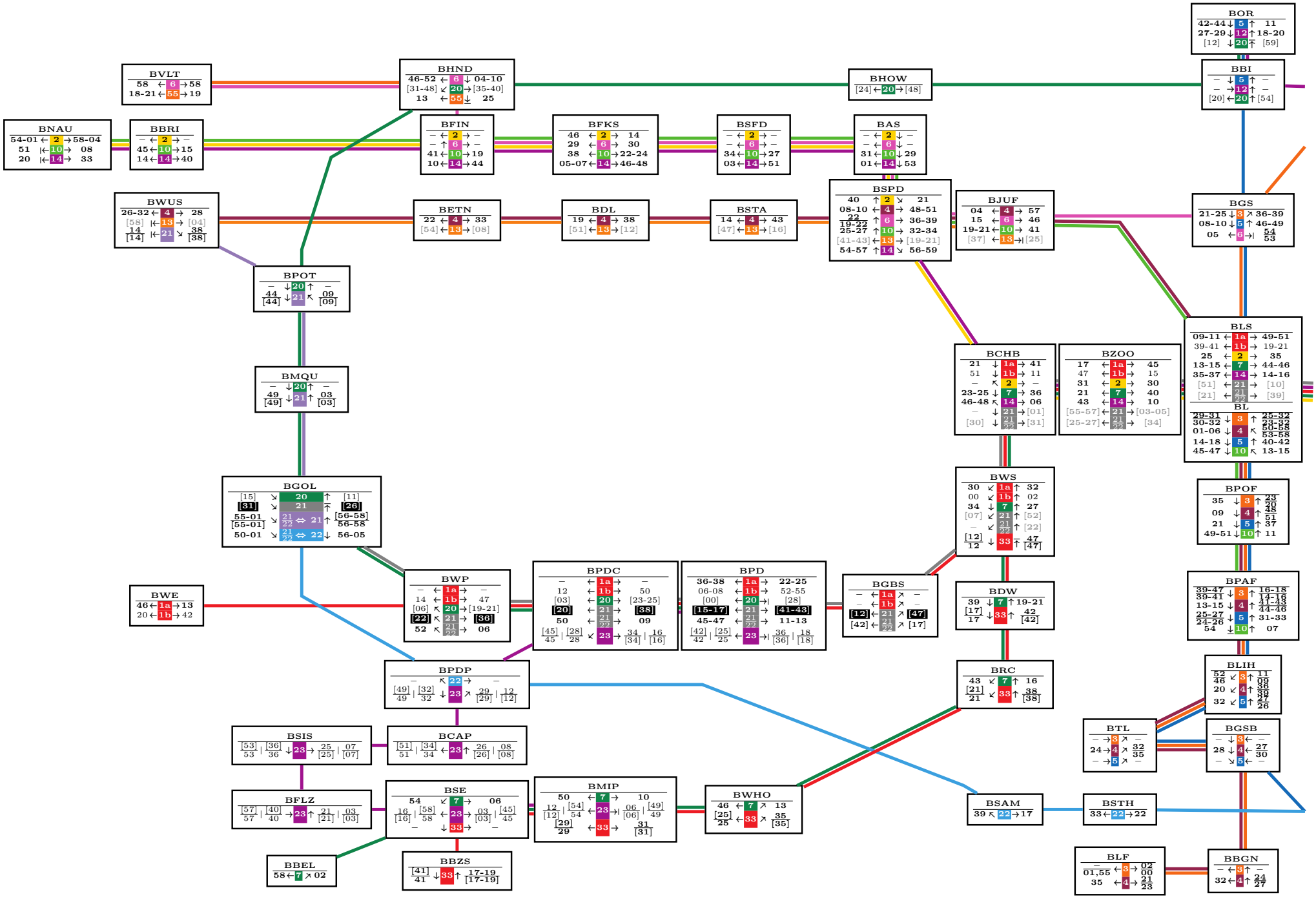
BOR
BVLT
BHND
BHOW
BBI
BNAU
BBRI
BFIN
BFKS
BSFD
BAS
BWUS
BETN
BDL
BSTA
BSPD
BJUF
BGS
BPOT
BCHB
BZOO
BLS
BL
BMQU
BGOL
BWS
BPOF
BWE
BWP
BPDC
BPD
BGBS
BDW
BPAF
BPDP
BRC
BLIH
BSIS
BCAP
BTL
BGSB
BFLZ
BSE
BMIP
BWHO
BSAM
BSTH
BBEL
BBZS
BLF
BBGN

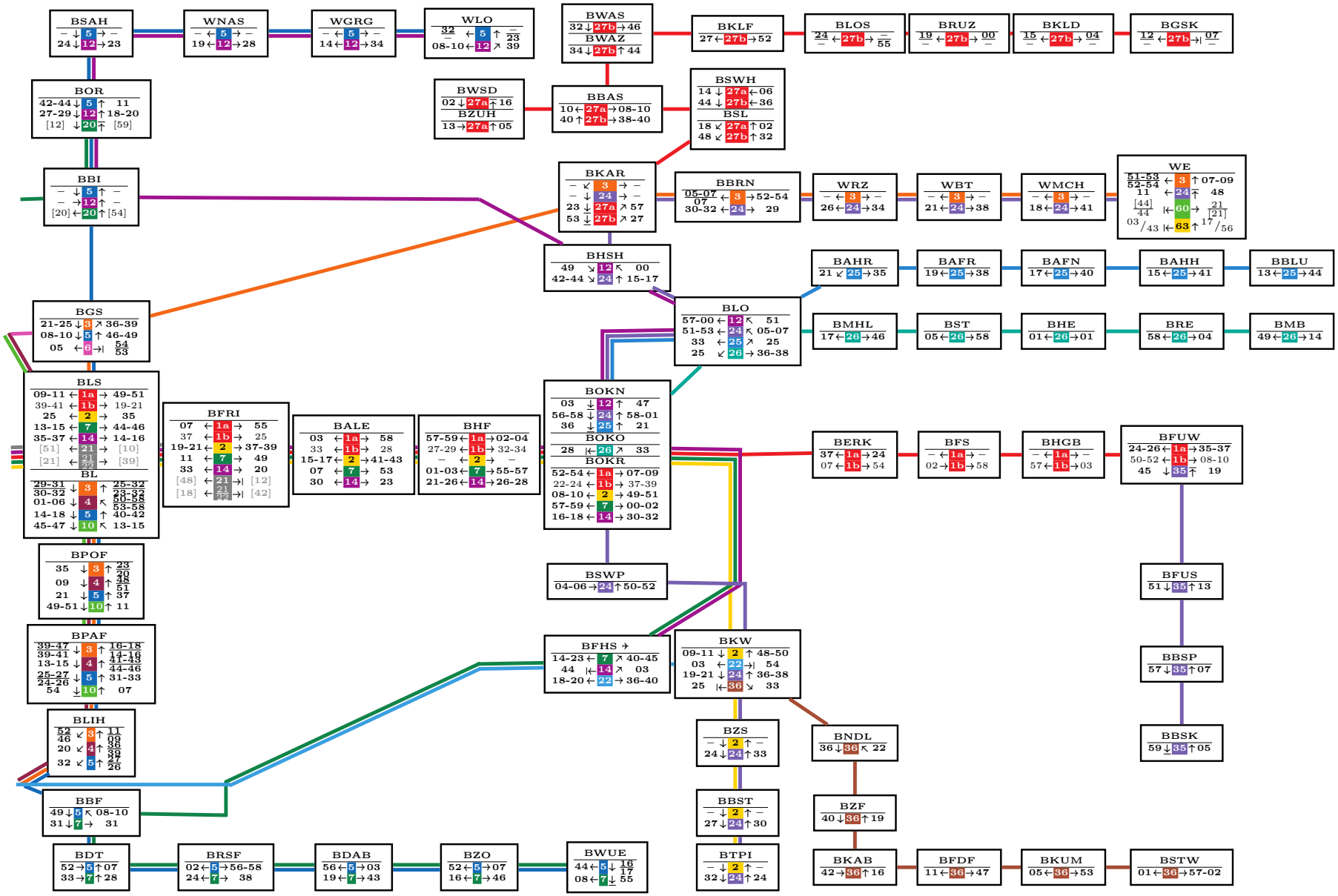
BSAH
WNAS
WGRG
WLO
BWAS
BWAZ
BKLF
BLOS
BRUZ
BKLD
BGSK
BOR
BWSD
BZUH
BBAS
BSWH
BSL
BBI
BKAR
BBRN
WRZ
WBT
WMCH
WE
BHSH
BAHR
BAFR
BAFN
BAHH
BBLU
BGS
BLO
BMHL
BST
BHE
BRE
BMB
BLS
BL
BFRI
BALE
BHF
BOKN
BOKO
BOKR
BERK
BFS
BHGB
BFUW
BPOF
BSWP
BFUS
BPAF
BFHS
BKW
BBSP
BLIH
BZS
BNDL
BBSK
BBF
BBST
BZF
BTPI
BKAB
BFDF
BKUM
BSTW
BDT
BRSF
BDAB
BZO
BWUE

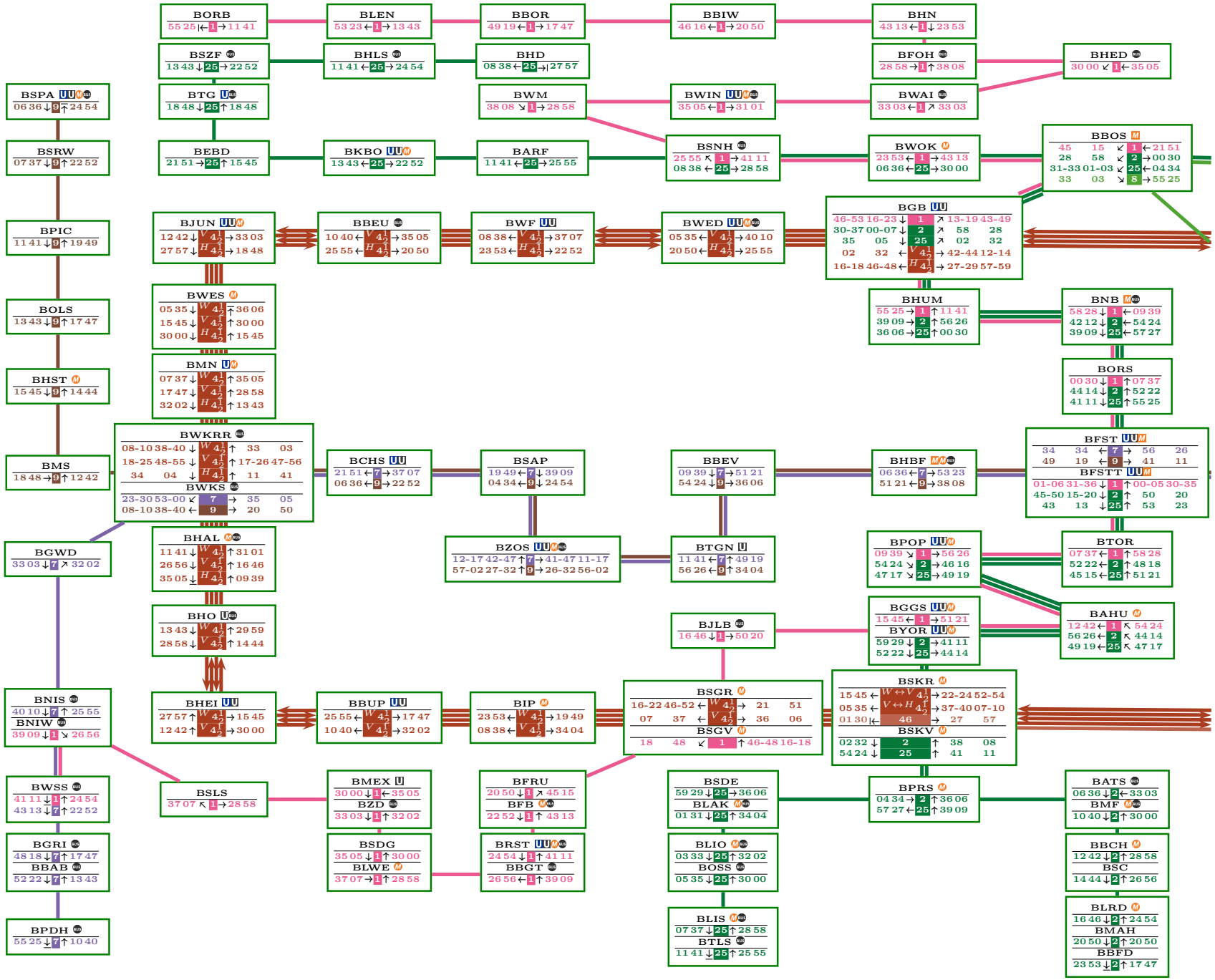
BORB
55 25 ← 1 → 11 41
BLEN
53 23 ← 1 → 13 43
BBOR
49 19 ← 1 → 17 47
BBIW
46 16 ← 1 → 20 50
BHN
43 13 ← 1 ↓ 23 53
BSZF
13 43 ↓ 25 → 22 52
BHLS
11 41 ← 25 → 24 54
BHD
08 38 ← 25 → 27 57
BFOH
28 58 → 1 ↑ 38 08
BHED
30 00 ↙ 1 ← 35 05
BSPA
06 36 ↓ 9 ↑ 24 54
BTG
18 48 ↓ 25 ↑ 18 48
BWM
38 08 ↘ 1 → 28 58
BWIN
35 05 ← 1 → 31 01
BWAI
33 03 ← 1 ↗ 33 03
BSRW
07 37 ↓ 9 ↑ 22 52
BEBD
21 51 → 25 ↑ 15 45
BKBO
13 43 ← 25 → 22 52
BARF
11 41 ← 25 → 25 55
BSNH
25 55 ↖ 1 → 41 11
08 38 ← 25 → 28 58
BWOK
23 53 ← 1 → 43 13
06 36 ← 25 → 30 00
BBOS
45 15 ↙ 1 ← 21 51
28 58 ↙ 2 → 00 30
31-33 01-03 ↙ 25 ← 04 34
33 03 ↘ 8 → 55 25
BPIC
11 41 ↓ 9 ↑ 19 49
BJUN
12 42 ↓ V 4 1/2 → 33 03
27 57 ↓ H 4 1/2 → 18 48
BBEU
10 40 ← V 4 1/2 → 35 05
25 55 ← H 4 1/2 → 20 50
BWF
08 38 ← V 4 1/2 → 37 07
23 53 ← H 4 1/2 → 22 52
BWED
05 35 ← V 4 1/2 → 40 10
20 50 ← H 4 1/2 → 25 55
BGB
46-53 16-23 ↓ 1 ↗ 13-19 43-49
30-37 00-07 ↓ 2 ↗ 58 28
35 05 ↓ 25 ↗ 02 32
02 32 ← V 4 1/2 → 42-44 12-14
16-18 46-48 ← H 4 1/2 → 27-29 57-59
BOLS
13 43 ↓ 9 ↑ 17 47
BWES
05 35 ↓ W 4 1/2 ↑ 36 06
15 45 ↓ V 4 1/2 ↑ 30 00
30 00 ↓ H 4 1/2 ↑ 15 45
BHUM
55 25 → 1 ↑ 11 41
39 09 → 2 ↑ 56 26
36 06 → 25 ↑ 00 30
BNB
58 28 ↓ 1 ← 09 39
42 12 ↓ 2 ← 54 24
39 09 ↓ 25 ← 57 27
BHST
15 45 ↓ 9 ↑ 14 44
BMN
07 37 ↓ W 4 1/2 ↑ 35 05
17 47 ↓ V 4 1/2 ↑ 28 58
32 02 ↓ H 4 1/2 ↑ 13 43
BORS
00 30 ↓ 1 ↑ 07 37
44 14 ↓ 2 ↑ 52 22
41 11 ↓ 25 ↑ 55 25
BWKRR
08-10 38-40 ↓ W 4 1/2 ↑ 33 03
18-25 48-55 ↓ V 4 1/2 ↑ 17-26 47-56
34 04 ↓ H 4 1/2 ↑ 11 41
BWKS
23-30 53-00 ↙ 7 → 35 05
08-10 38-40 ← 9 → 20 50
BCHS
21 51 ← 7 → 37 07
06 36 ← 9 → 22 52
BSAP
19 49 ← 7 ↓ 39 09
04 34 ← 9 ↓ 24 54
BBEV
09 39 ↓ 7 → 51 21
54 24 ↓ 9 → 36 06
BHBF
06 36 ← 7 → 53 23
51 21 ← 9 → 38 08
BFST
34 34 ← 7 → 56 26
49 19 ← 9 → 41 11
BFSTT
01-06 31-36 ↓ 1 ↑ 00-05 30-35
45-50 15-20 ↓ 2 ↑ 50 20
43 13 ↓ 25 ↑ 53 23
BMS
18 48 → 9 ↑ 12 42
BGWD
33 03 ↓ 7 ↗ 32 02
BHAL
11 41 ↓ W 4 1/2 ↑ 31 01
26 56 ↓ V 4 1/2 ↑ 16 46
35 05 ↓ H 4 1/2 ↑ 09 39
BZOS
12-17 42-47 ↑ 7 → 41-47 11-17
57-02 27-32 ↑ 9 → 26-32 56-02
BTGN
11 41 ← 7 ↑ 49 19
56 26 ← 9 ↑ 34 04
BPOP
09 39 ↘ 1 → 56 26
54 24 ↘ 2 → 46 16
47 17 ↘ 25 → 49 19
BTOR
07 37 ← 1 ↑ 58 28
52 22 ← 2 ↑ 48 18
45 15 ← 25 ↑ 51 21
BHO
13 43 ↓ W 4 1/2 ↑ 29 59
28 58 ↓ V 4 1/2 ↑ 14 44
BJLB
16 46 ↓ 1 → 50 20
BGGS
15 45 ← 1 → 51 21
BYOR
59 29 ↓ 2 → 41 11
52 22 ↓ 25 → 44 14
BAHU
12 42 ← 1 ↖ 54 24
56 26 ← 2 ↖ 44 14
49 19 ← 25 ↖ 47 17
BNIS
40 10 ↓ 7 ↑ 25 55
BNIW
39 09 ↓ 1 ↘ 26 56
BHEI
27 57 ↑ W 4 1/2 → 15 45
12 42 ↑ V 4 1/2 → 30 00
BBUP
25 55 ← W 4 1/2 → 17 47
10 40 ← V 4 1/2 → 32 02
BIP
23 53 ← W 4 1/2 → 19 49
08 38 ← V 4 1/2 → 34 04
BSGR
16-22 46-52 ← W 4 1/2 → 21 51
07 37 ← V 4 1/2 → 36 06
BSGV
18 48 ↙ 1 ↑ 46-48 16-18
BSKR
15 45 ← W ↔ V 4 1/2 → 22-24 52-54
05 35 ← V ↔ H 4 1/2 → 37-40 07-10
01 30 |← 46 → 27 57
BSKV
02 32 ↓ 2 ↑ 38 08
54 24 ↓ 25 ↑ 41 11
BWSS
41 11 ↓ 1 ↑ 24 54
43 13 ↓ 7 ↑ 22 52
BSLS
37 07 ↖ 1 → 28 58
BMEX
30 00 ↓ 1 ← 35 05
BZD
33 03 ↓ 1 ↑ 32 02
BFRU
20 50 ↓ 1 ↗ 45 15
BFB
22 52 ↓ 1 ↑ 43 13
BSDE
59 29 ↓ 25 → 36 06
BLAK
01 31 ↓ 25 ↑ 34 04
BPRS
04 34 → 2 ↑ 36 06
57 27 ← 25 ↑ 39 09
BATS
06 36 ↓ 2 ← 33 03
BMF
10 40 ↓ 2 ↑ 30 00
BGRI
48 18 ↓ 7 ↑ 17 47
BBAB
52 22 ↓ 7 ↑ 13 43
BSDG
35 05 ↓ 1 ↑ 30 00
BLWE
37 07 → 1 ↑ 28 58
BRST
24 54 ↓ 1 ↑ 41 11
BBGT
26 56 ← 1 ↑ 39 09
BLIO
03 33 ↓ 25 ↑ 32 02
BOSS
05 35 ↓ 25 ↑ 30 00
BBCH
12 42 ↓ 2 ↑ 28 58
BSC
14 44 ↓ 2 ↑ 26 56
BPDH
55 25 ↓ 7 ↑ 10 40
BLIS
07 37 ↓ 25 ↑ 28 58
BTLS
11 41 ↓ 25 ↑ 25 55
BLRD
16 46 ↓ 2 ↑ 24 54
BMAH
20 50 ↓ 2 ↑ 20 50
BBFD
23 53 ↓ 2 ↑ 17 47

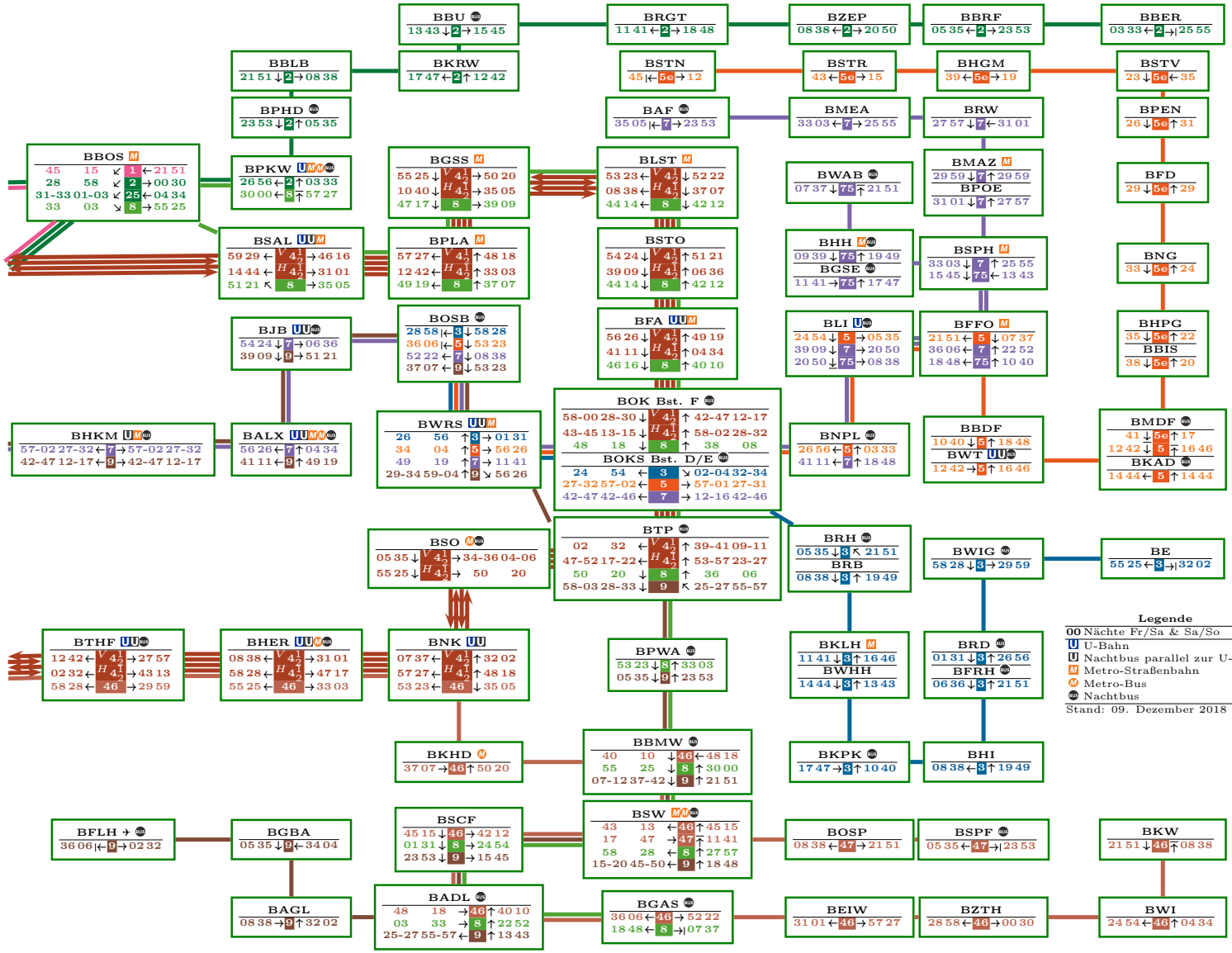
BBU
13 43 ↓ 2 → 15 45
BRGT
11 41 ← 2 → 18 48
BZEP
08 38 ← 2 → 20 50
BBRF
05 35 ← 2 → 23 53
BBER
03 33 ← 2 →| 25 55
BBLB
21 51 ↓ 2 → 08 38
BKRW
17 47 ← 2 ↑ 12 42
BSTN
45 |← 5e → 12
BSTR
43 ← 5e → 15
BHGM
39 ← 5e → 19
BSTV
23 ↓ 5e ← 35
BPHD
23 53 ↓ 2 ↑ 05 35
BAF
35 05 |← 7 → 23 53
BMEA
33 03 ← 7 → 25 55
BRW
27 57 ↓ 7 ← 31 01
BPEN
26 ↓ 5e ↑ 31
BBOS M
45 15 ↙ 1 ← 21 51
28 58 ↙ 2 → 00 30
31-33 01-03 ↙ 25 ← 04 34
33 03 ↘ 8 → 55 25
BPKW U M M
26 56 ← 2 ↑ 03 33
30 00 ← 8 ↑ 57 27
BGSS M
55 25 ↓ V 4½ → 50 20
10 40 ↓ H 4½ → 35 05
47 17 ↓ 8 → 39 09
BLST M
53 23 ← V 4½ ↓ 52 22
08 38 ← H 4½ ↓ 37 07
44 14 ← 8 ↓ 42 12
BWAB
07 37 ↓ 75 ↑ 21 51
BMAZ M
29 59 ↓ 7 ↑ 29 59
BPOE
31 01 ↓ 7 ↑ 27 57
BFD
29 ↓ 5e ↑ 29
BSAL U U M
59 29 ← V 4½ → 46 16
14 44 ← H 4½ → 31 01
51 21 ↖ 8 → 35 05
BPLA M
57 27 ← V 4½ ↑ 48 18
12 42 ← H 4½ ↑ 33 03
49 19 ← 8 ↑ 37 07
BSTO
54 24 ↓ V 4½ ↑ 51 21
39 09 ↓ H 4½ ↑ 06 36
44 14 ↓ 8 ↑ 42 12
BHH M
09 39 ↓ 75 ↑ 19 49
BGSE
11 41 → 75 ↑ 17 47
BSPH M
33 03 ↓ 7 ↑ 25 55
15 45 ↓ 75 ← 13 43
BNG
33 ↓ 5e ↑ 24
BJB U U
54 24 ↓ 7 → 06 36
39 09 ↓ 9 → 51 21
BOSB
28 58 |← 3 ↓ 58 28
36 06 |← 5 ↓ 53 23
52 22 ← 7 ↓ 08 38
37 07 ← 9 ↓ 53 23
BFA U U M
56 26 ↓ V 4½ ↑ 49 19
41 11 ↓ H 4½ ↑ 04 34
46 16 ↓ 8 ↑ 40 10
BLI U
24 54 ↓ 5 → 05 35
39 09 ↓ 7 → 20 50
20 50 ↓ 75 → 08 38
BFFO M
21 51 ← 5 ↓ 07 37
36 06 ← 7 ↑ 22 52
18 48 ← 75 ↑ 10 40
BHPG
35 ↓ 5e ↑ 22
BBIS
38 ↓ 5e ↑ 20
BHKM U M
57-02 27-32 ← 7 → 57-02 27-32
42-47 12-17 ← 9 → 42-47 12-17
BALX U U M M
56 26 ← 7 ↑ 04 34
41 11 ← 9 ↑ 49 19
BWRS U U M
26 56 ↑ 3 → 01 31
34 04 ↑ 5 → 56 26
49 19 ↑ 7 → 11 41
29-34 59-04 ↑ 9 ↘ 56 26
BOK Bst. F
58-00 28-30 ↓ V 4½ ↑ 42-47 12-17
43-45 13-15 ↓ H 4½ ↑ 58-02 28-32
48 18 ↓ 8 ↑ 38 08
BOKS Bst. D/E
24 54 ← 3 ↘ 02-04 32-34
27-32 57-02 ← 5 → 57-01 27-31
42-47 42-46 ← 7 → 12-16 42-46
BNPL
26 56 ← 5 ↑ 03 33
41 11 ← 7 ↑ 18 48
BBDF
10 40 ↓ 3 ↑ 18 48
BWT U U
12 42 → 3 ↑ 16 46
BMDF
41 ↓ 5e ↑ 17
12 42 ↓ 5 ↑ 16 46
BKAD
14 44 ← 5 ↑ 14 44
BSO M
05 35 ↓ V 4½ → 34-36 04-06
55 25 ↓ H 4½ → 50 20
BTP
02 32 ← V 4½ ↑ 39-41 09-11
47-52 17-22 ← H 4½ ↑ 53-57 23-27
50 20 ↓ 8 ↑ 36 06
58-03 28-33 ↓ 9 ↖ 25-27 55-57
BRH
05 35 ↓ 3 ↖ 21 51
BRB
08 38 ↓ 3 ↑ 19 49
BWIG
58 28 ↓ 3 → 29 59
BE
55 25 ← 3 →| 32 02
BTHF U U
12 42 ← V 4½ → 27 57
02 32 ← H 4½ → 43 13
58 28 ← 46 → 29 59
BHER U U M M
08 38 ← V 4½ → 31 01
58 28 ← H 4½ → 47 17
55 25 ← 46 → 33 03
BNK U U
07 37 ← V 4½ ↑ 32 02
57 27 ← H 4½ ↑ 48 18
53 23 ← 46 ↓ 35 05
BPWA
53 23 ↓ 8 ↑ 33 03
05 35 ↓ 9 ↑ 23 53
BKLH M
11 41 ↓ 3 ↑ 16 46
BWHH
14 44 ↓ 3 ↑ 13 43
BRD
01 31 ↓ 3 ↑ 26 56
BFRH
06 36 ↓ 3 ↑ 21 51
BKHD M
37 07 → 46 ↑ 50 20
BBMW
40 10 ↓ 46 ← 48 18
55 25 ↓ 8 ↑ 30 00
07-12 37-42 ↓ 9 ↑ 21 51
BKPK
17 47 → 3 ↑ 10 40
BHI
08 38 ← 3 ↑ 19 49
BFLH ✈
36 06 |← 9 → 02 32
BGBA
05 35 ↓ 9 ← 34 04
BSCF
45 15 ↓ 46 → 42 12
01 31 ↓ 8 → 24 54
23 53 ↓ 9 → 15 45
BSW M M
43 13 ← 46 ↑ 45 15
17 47 → 47 ↑ 11 41
58 28 ← 8 ↑ 27 57
15-20 45-50 ← 9 ↑ 18 48
BOSP
08 38 ← 47 → 21 51
BSPF
05 35 ← 47 →| 23 53
BKW
21 51 ↓ 46 ↑ 08 38
BAGL
08 38 → 9 ↑ 32 02
BADL
48 18 → 46 ↑ 40 10
03 33 → 8 ↑ 22 52
25-27 55-57 ← 9 ↑ 13 43
BGAS
36 06 ← 46 → 52 22
18 48 ← 8 →| 07 37
BEIW
31 01 ← 46 → 57 27
BZTH
28 58 ← 46 → 00 30
BWI
24 54 ← 46 ↑ 04 34
Legende
00 Nächte Fr/Sa & Sa/So
U U-Bahn
U Nachtbus parallel zur U-Bahn
M Metro-Straßenbahn
M Metro-Bus
Nachtbus
Stand: 09. Dezember 2018

S1 (Fr/Sa)					S1 (Sa/So)				S1 (Fr/Sa)							S1 (Sa/So)						
BWSS	00:54	30	04:24		00:54	30	06:24		BORB	00:51	01:11	30	03:41	04:11		00:51	01:11	30	05:41	06:11		
BORB	02:25		05:55		02:25		07:55		BWSS	02:11	02:41		05:11	05:31		02:11	02:41		07:11	07:31		

S3 (Fr/Sa)					S3 (Sa/So)				S3 (Fr/Sa)					S3 (Sa/So)				
BE	00:55	30	04:25		00:55	30	05:55		BOKS	01:34	30	05:04		01:34	30	06:34		
BOKS	01:23		04:53		01:23		06:23		BE	02:02		05:32		02:02		07:02		

S9 (Fr/Sa)					S9 (Sa/So)				S9 (Fr/Sa)							S9 (Sa/So)						
BFLH	01:02	30	04:02		01:02	30	06:02		BSPA	00:36	30	03:06	03:36	04:06		00:36	30	05:06	05:36	06:06		
BSPA	02:24		05:24		02:24		07:24		BFLH	02:06		04:36	05:09	05:31		02:06		06:36	07:09	07:29		

S2 (Fr/Sa)						S2 (Sa/So)						S2 (Fr/Sa)						S2 (Sa/So)						
BBFD	00:14	00:46	30	03:46	04:16	00:14	00:46	30	05:46	06:16		BBER	00:03	00:33	01:03	30	03:03	03:33	04:03		04:33		00:03	00:33	01:03	30	05:03	05:33	06:03		06:33
BGB	00:56	01:28		04:28	04:58	00:56	01:28		06:28	06:58		BGB	00:37	01:04	01:37		03:37	04:07	04:30	04:50	05:10		00:37	01:04	01:37		05:37	06:07	06:30	06:50	07:10
BBER	01:25	01:55		04:55	05:35	01:25	01:55		06:55	07:35		BBFD	01:23	01:53	02:23		04:23	04:51	05:11	05:31	05:51		01:23	01:53	02:23		06:23	06:51	07:11	07:31	07:51

S5 (Fr/Sa)						S5 (Sa/So)						S5 (Fr/Sa)						S5 (Sa/So)					
BSTN			01:09	02:12	03:12			01:09	02:12	60	05:12	BMDF	02:17	60	04:17		02:17	60	06:17			
BST	00:40	01:22	02:22	03:22		00:40	01:22	02:22			05:22	BST	02:36		04:36		02:36		06:36			
BMDF	01:00	01:41	02:41	03:41		01:00	01:41	02:41			05:41	BSTN	02:46		04:46		02:46		06:46			

S25 (Fr/Sa)					S25 (Sa/So)				S25 (Fr/Sa)							S25 (Sa/So)								
BTLS	00:55	30	03:55		00:55	30	05:55		BHD	00:48	01:08	30	03:38	04:08	04:38	00:48	01:08	30	05:38	06:08	06:38			
BPOP	01:19		04:19		01:19		06:19	06:39	BSNH	01:08	01:28		03:58	04:28	04:58	01:08	01:28		05:58	06:28	06:58			
BSNH	01:38		04:38		01:38		06:38	07:01	BPOP	01:27	01:47		04:17	04:47	05:17	01:27	01:47		06:17	06:47	07:17			
BHD	01:57		04:57		01:57		06:57		BTLS	01:51	02:11		04:41	05:11	05:41	01:51	02:11		06:41	07:11	07:41			

S8 (Fr/Sa)								S8 (Sa/So)								S8 (Fr/Sa)								S8 (Sa/So)							
BGAS	00:48	30	03:48	04:18				00:48	30	03:48	04:18	04:48	30	05:48	06:18	BBIW	00:37							00:37			04:34		05:37		
BPKW	01:27		04:27	04:57				01:27		04:27	04:57	05:27		06:27	06:57	BBLB	00:58							00:58			04:55	05:25	05:58	06:25	
BBLB				05:02							05:02	05:32		06:32	07:02	BPKW	01:03	01:30	30	04:30		05:00	05:30	01:03	01:30	30	04:30	05:00	05:30	06:03	06:30
BBIW				05:23							05:23	05:53		06:53		BGAS	01:40	02:07		05:07		05:37	06:07	01:40	02:07		05:07	05:37	06:07	06:40	07:07

S5 (Fr/Sa)					S5 (Sa/So)				S5 (Fr/Sa)					S5 (Sa/So)				
BMDF	01:12	30	04:12		01:12	30	06:12		BOSB	01:25	30	04:25		01:25	30	06:25		
BOSB	01:34		04:34		01:34		06:34		BMDF	01:46		04:46		01:46		06:46		

S7 (Fr/Sa)						S7 (Sa/So)						S7 (Fr/Sa)						S7 (Sa/So)					
BAF	00:51	01:23	30	03:53	04:23		00:51	01:23	30	05:53	06:23	BPDH	00:40	30	03:40	04:10		00:40	30	05:40	06:10		
BPDH	02:25	02:55		05:25	05:45		02:25	02:55		07:25	07:45	BAF	02:05		05:05	05:34		02:05		07:05	07:34		

S75 (Fr/Sa)					S75 (Sa/So)				S75 (Fr/Sa)					S75 (Sa/So)		
BWAB	01:06	30	04:36		01:06	30	06:06		BLI	01:38	30	04:08		01:38	30	06:38
BLI	01:20		04:50		01:20		06:20		BWAB	01:51		04:21		01:51		06:51

S41 A (Fr/Sa)

von	↻	↻	↻	↻	↻	↻		↻	↻		↻	↻		HAL	↻		HAL	↻		HAL	↻		HAL	↻	HAL	↻		HAL
BSKR	00:26	00:36	00:46	00:56	01:06	01:16		01:35	01:46		02:05	02:15		02:35	02:45		03:05	03:15		03:35	03:45		04:05	04:15	04:35	04:46	04:56	05:06
BSGR o	00:27	00:37	00:47	00:57	01:07	01:17		01:36	01:47		02:06	02:16		02:36	02:46		03:06	03:16		03:36	03:46		04:06	04:16	04:36	04:47	04:57	05:06
BSGR	00:28	00:38	00:48	00:58	01:08	01:22		01:37	01:52		02:07	02:22		02:37	02:52		03:07	03:22		03:37	03:52		04:07	04:22	04:37	04:48	04:58	05:07
BHAL	00:37	00:47	00:57	01:07	01:17	01:31	01:39	01:46	02:01	02:09	02:16	02:31	02:39	02:46	03:01	03:09	03:16	03:31	03:39	03:46	04:01	04:09	04:16	04:31	04:46	04:57	05:07	05:16
BWKRR o	00:38	00:48	00:58	01:08	01:18	01:32	01:41	01:47	02:02	02:11	02:17	02:32	02:41	02:47	03:02	03:11	03:17	03:32	03:41	03:47	04:02	04:11	04:17	04:32	04:47	04:58	05:08	05:17
BWKRR	00:39	00:49	00:59	01:11	01:26	01:33	01:41	01:56	02:03	02:11	02:26	02:33	02:41	02:56	03:03	03:11	03:26	03:33	03:41	03:56	04:03	04:11	04:26	04:39	04:49	04:59	05:09	05:19
BWES	00:42	00:52	01:02	01:15	01:30	01:36	01:45	02:00	02:06	02:15	02:30	02:36	02:45	03:00	03:06	03:15	03:30	03:36	03:45	04:00	04:06	04:15	04:30	04:42	04:52	05:02	05:12	05:22
BGB o	00:55	01:05	01:15	01:27	01:42		01:57	02:12		02:27	02:42		02:57	03:12		03:27	03:42		03:57	04:12		04:27	04:42	04:55	05:05	05:15	05:25	05:35
BGB	00:59		01:15	01:29	01:44		01:59	02:14		02:29	02:44		02:59	03:14		03:29	03:44		03:59	04:14		04:29	04:45	04:55	05:05	05:15	05:25	05:35
BOK o	01:13		01:30	01:43	01:58		02:13	02:28		02:43	02:58		03:13	03:28		03:43	03:58		04:13	04:28		04:43	05:00	05:10	05:20	05:30	05:40	05:50
BOK	01:15		01:31	01:45	02:00		02:15	02:30		02:45	03:00		03:15	03:30		03:45	04:00		04:15	04:30		04:45	05:01	05:11	05:21	05:31	05:41	05:51
BTP o	01:17		01:32	01:47	02:01		02:17	02:31		02:47	03:01		03:17	03:31		03:47	04:01		04:17	04:31		04:47	05:02	05:12	05:22	05:32	05:42	05:52
BTP	01:22		01:33	01:52	02:02		02:22	02:32		02:52	03:02		03:22	03:32		03:52	04:02		04:22	04:32		04:52	05:03	05:13	05:23	05:33	05:43	05:53
BSKR o	01:34		01:45	02:04	02:14		02:34	02:44		03:04	03:14		03:34	03:44		04:04	04:14		04:34	04:44		05:04	05:15	05:25	05:35	05:45	05:55	05:05
nach	↻		WES	↻	WES		↻	WES		↻	WES		↻	WES		↻	↻		↻	↻		↻	↻	↻	↻	↻	↻	↻

S41 A (Sa/So)

von	↻	↻	↻	↻	↻		↻	↻		↻	↻		HAL	↻		HAL	↻		HAL	↻		HAL	↻	HAL	↻	HAL	↻	↻	↻
BSKR	00:26	00:46	00:56	01:06	01:16		01:35	01:46		02:05	02:15		02:35	02:45		03:05	03:15		03:35	03:45		04:05	04:15	04:35	04:45	05:05	05:15	05:35	05:45
BSGR o	00:27	00:47	00:57	01:07	01:17		01:36	01:47		02:06	02:16		02:36	02:46		03:06	03:16		03:36	03:46		04:06	04:16	04:36	04:46	05:06	05:16	05:36	05:46
BSGR	00:28	00:48	00:58	01:08	01:22		01:37	01:52		02:07	02:22		02:37	02:52		03:07	03:22		03:37	03:52		04:07	04:22	04:37	04:52	05:07	05:22	05:37	05:52
BHAL	00:37	00:57	01:07	01:17	01:31	01:39	01:46	02:01	02:09	02:16	02:31	02:39	02:46	03:01	03:09	03:16	03:31	03:39	03:45	04:01	04:09	04:16	04:31	04:46	05:01	05:16	05:31	05:46	06:01
BWKRR o	00:38	00:58	01:08	01:18	01:32	01:41	01:47	02:02	02:11	02:17	02:32	02:41	02:47	03:02	03:11	03:17	03:32	03:41	03:47	04:02	04:11	04:17	04:32	04:47	05:02	05:17	05:32	05:47	06:02
BWKRR	00:39	00:59	01:11	01:26	01:33	01:41	01:56	02:03	02:11	02:26	02:33	02:41	02:56	03:03	03:11	03:26	03:33	03:41	03:56	04:03	04:11	04:26	04:41	04:56	05:11	05:26	05:41	05:56	06:09
BWES	00:42	01:02	01:15	01:30	01:36	01:45	02:00	02:06	02:15	02:30	02:36	02:45	03:00	03:06	03:15	03:30	03:36	03:45	04:00	04:06	04:15	04:30	04:45	05:00	05:15	05:30	05:45	06:00	06:12
BGB o	00:55	01:15	01:27	01:42		01:57	02:12		02:27	02:42		02:57	03:12		03:27	03:42		03:57	04:12		04:27	04:42	04:57	05:12	05:27	05:42	05:57	06:12	06:25
BGB	00:59	01:15	01:29	01:44		01:59	02:14		02:29	02:44		02:59	03:14		03:29	03:44		03:59	04:14		04:29	04:44	04:59	05:14	05:29	05:44	05:59	06:14	06:25
BOK o	01:13	01:30	01:43	01:58		02:13	02:28		02:43	02:58		03:13	03:28		03:43	03:58		04:13	04:28		04:43	04:58	05:13	05:28	05:43	05:58	06:13	06:28	06:40
BOK	01:15	01:31	01:45	02:00		02:15	02:30		02:45	03:00		03:15	03:30		03:45	04:00		04:15	04:30		04:45	05:00	05:15	05:30	05:45	06:00	06:15	06:30	06:41
BTP o	01:17	01:32	01:47	02:01		02:17	02:31		02:47	03:01		03:17	03:31		03:47	04:01		04:17	04:31		04:47	05:01	05:17	05:31	05:47	06:01	06:17	06:31	06:42
BTP	01:22	01:33	01:52	02:02		02:22	02:32		02:52	03:02		03:22	03:32		03:52	04:02		04:22	04:32		04:52	05:02	05:22	05:32	05:52	06:02	06:22	06:33	06:43
BSKR o	01:34	01:45	02:04	02:14		02:34	02:44		03:04	03:14		03:34	03:44		04:04	04:14		04:34	04:44		05:04	05:14	05:34	05:44	06:04	06:14	06:34	06:45	06:55
nach	↻	WES	↻	WES		↻	WES		↻	WES		↻	WES		↻	↻		↻	↻		↻	↻	↻	↻	↻	↻	↻	↻	↻

S46 (Fr/Sa)					S46 (Sa/So)				S46 (Fr/Sa)							S46 (Sa/So)						
BKW	00:51	30	04:21		00:51	30	05:51		BSKR	01:27	30	03:57	04:27	04:57		01:27	30	03:57	04:27	04:57	30	05:57	06:27
BSKR	01:30		05:00		01:30		06:30		BKW	02:08		04:38	05:16	05:38		02:08		04:38	05:16	05:38		06:38	07:16

S47 (Fr/Sa)					S47 (Sa/So)				S47 (Fr/Sa)					S47 (Sa/So)		
BSPF	01:35	30	04:35		01:35	30	06:35		BSW	01:47	30	04:47		01:47	30	06:47
BSW	01:41		04:41		01:41		06:41		BSPF	01:53		04:53		01:53		06:53

S42 R (Fr/Sa)

von	↻	↻	↻	↻	↻	↻		↻	↻		↻	↻		WES	↻		↻	↻		WES	↻	WES		WES		↻	↻						
BSKR	00:20	00:30	00:40	00:50	01:00	01:10		01:24	01:40		01:54	02:10		02:24	02:40		02:54	03:10		03:24	03:40	03:54	04:10	04:24		04:40	04:54						
BTP o	00:33	00:43	00:53	01:03	01:13	01:23		01:39	01:54		02:09	02:24		02:39	02:54		03:09	03:24		03:39	03:54	04:09	04:24	04:39		04:54	05:09						
BTP	00:33	00:43	00:53	01:03	01:13	01:27		01:41	01:57		02:11	02:27		02:41	02:57		03:11	03:27		03:41	03:57	04:11	04:27	04:41		04:57	05:11						
BOK o	00:35	00:45	00:55	01:05	01:15	01:28		01:43	01:58		02:13	02:28		02:43	02:58		03:13	03:28		03:43	03:58	04:13	04:28	04:43		04:58	05:13						
BOK	00:36	00:46	00:56	01:06	01:16	01:32		01:47	02:02		02:17	02:32		02:47	03:02		03:17	03:32		03:47	04:02	04:17	04:32	04:46		05:02	05:16						
BGB o	00:50	01:00	01:10	01:20	01:30	01:46		02:01	02:16		02:31	02:46		03:01	03:16		03:31	03:46		04:01	04:16	04:31	04:46	05:00		05:16	05:30						
BGB	00:51	01:01	01:11	01:21	01:31	01:48		02:02	02:18		02:32	02:48		03:02	03:18		03:32	03:48		04:02	04:18	04:32	04:48	05:01		05:18	05:31						
BWES	01:03	01:13	01:23	01:33	01:43	02:00	02:05	02:15	02:30	02:35	02:45	03:00	03:05	03:16	03:30	03:35	03:45	04:00	04:05	04:15	04:30	04:45	05:00	05:13	05:23	05:30	05:43						
BWKRR o	01:07	01:17	01:27	01:37	01:47	02:03	02:08	02:18	02:33	02:38	02:48	03:03	03:08	03:18	03:33	03:38	03:48	04:03	04:08	04:18	04:33	04:48	05:03	05:17	05:27	05:33	05:47						
BWKRR	01:10	01:25	01:27	01:40	01:55	02:04	02:10	02:25	02:34	02:40	02:55	03:04	03:10	03:25	03:34	03:40	03:55	04:04	04:10	04:25	04:40	04:55	05:07	05:17	05:27	05:37	05:47						
BHAL	01:11	01:26	01:28	01:41	01:56	02:05	02:11	02:26	02:35	02:41	02:56	03:05	03:11	03:26	03:35	03:41	03:56	04:05	04:11	04:26	04:41	04:56	05:09	05:19	05:29	05:39	05:49						
BSGR o	01:20	01:35		01:50	02:05		02:20	02:35		02:50	03:05		03:20	03:35		03:50	04:05		04:20	04:35	04:50	05:05	05:18	05:28	05:38	05:48	05:58						
BSGR	01:21	01:36		01:51	02:06		02:21	02:36		02:51	03:06		03:21	03:36		03:51	04:06		04:21	04:36	04:51	05:06	05:18	05:28	05:38	05:48	05:58						
BSKR o	01:22	01:37		01:52	02:07		02:22	02:37		02:52	03:07		03:22	03:37		03:52	04:07		04:22	04:37	04:52	05:07	05:20	05:30	05:40	05:50	06:00						
nach	↻	HAL			HAL		↻	HAL		↻	HAL		↻	↻		↻	↻		↻	↻	↻	↻	↻	↻	↻	↻	↻						

S42 R (Sa/So)

von	↻	↻	↻	↻	↻	↻		↻	↻		↻	↻		WES	↻		WES	↻		WES	↻	WES	↻	WES	↻	↻	↻	↻	↻	↻		↻	↻
BSKR	00:20	00:30	00:40	00:50	01:00	01:10		01:24	01:40		01:54	02:10		02:24	02:40		02:54	03:10		03:24	03:40	03:54	04:10	04:24	04:40	04:54	05:10	05:24	05:40	05:54		06:10	06:24
BTP o	00:33	00:43	00:53	01:03	01:13	01:23		01:39	01:54		02:09	02:24		02:39	02:54		03:09	03:24		03:39	03:54	04:09	04:24	04:39	04:54	05:09	05:24	05:39	05:54	06:09		06:24	06:39
BTP	00:33	00:43	00:53	01:03	01:13	01:27		01:41	01:57		02:11	02:27		02:41	02:57		03:11	03:27		03:41	03:57	04:11	04:27	04:41	04:57	05:11	05:27	05:41	05:57	06:11		06:27	06:41
BOK o	00:35	00:45	00:55	01:05	01:15	01:28		01:43	01:58		02:13	02:28		02:43	02:58		03:13	03:28		03:43	03:58	04:13	04:28	04:43	04:58	05:13	05:28	05:43	05:58	06:13		06:28	06:43
BOK	00:36	00:46	00:56	01:06	01:16	01:32		01:47	02:02		02:17	02:32		02:47	03:02		03:17	03:32		03:47	04:02	04:17	04:32	04:47	05:02	05:17	05:32	05:47	06:02	06:16		06:32	06:46
BGB o	00:50	01:00	01:10	01:20	01:30	01:46		02:01	02:16		02:31	02:46		03:01	03:16		03:31	03:46		04:01	04:16	04:31	04:46	05:01	05:16	05:31	05:46	06:01	06:16	06:30		06:46	07:00
BGB	00:51	01:01	01:11	01:21	01:31	01:48		02:02	02:18		02:32	02:48		03:02	03:18		03:32	03:48		04:02	04:18	04:32	04:48	05:02	05:18	05:32	05:48	06:02	06:18	06:31		06:48	07:01
BWES	01:03	01:13	01:23	01:33	01:43	02:00	02:05	02:15	02:30	02:35	02:45	03:00	03:05	03:15	03:30	03:35	03:45	04:00	04:05	04:15	04:30	04:45	05:00	05:15	05:30	05:45	06:00	06:15	06:30	06:43	06:53	07:00	07:13
BWKRR o	01:07	01:17	01:27	01:37	01:47	02:03	02:08	02:18	02:33	02:38	02:48	03:03	03:08	03:18	03:33	03:38	03:48	04:03	04:08	04:18	04:33	04:48	05:03	05:18	05:33	05:48	06:03	06:18	06:33	06:47	06:57	07:03	07:17
BWKRR	01:10	01:25	01:27	01:40	01:55	02:04	02:10	02:25	02:34	02:40	02:55	03:04	03:10	03:25	03:34	03:40	03:55	04:04	04:10	04:25	04:40	04:55	05:10	05:25	05:40	05:55	06:10	06:25	06:37	06:47	06:57	07:07	07:17
BHAL	01:11	01:26	01:28	01:41	01:56	02:05	02:11	02:26	02:35	02:41	02:56	03:05	03:11	03:26	03:35	03:41	03:56	04:05	04:11	04:26	04:41	04:56	05:11	05:26	05:41	05:56	06:11	06:26	06:39	06:49	06:59	07:09	07:19
BSGR o	01:20	01:35		01:50	02:05		02:20	02:35		02:50	03:05		03:20	03:35		03:50	04:05		04:20	04:35	04:50	05:05	05:20	05:35	05:50	06:05	06:20	06:35	06:48	06:58	07:08	07:18	07:28
BSGR	01:21	01:36		01:51	02:06		02:21	02:36		02:51	03:06		03:21	03:36		03:51	04:06		04:21	04:36	04:51	05:06	05:21	05:36	05:51	06:06	06:21	06:36	06:48	06:58	07:08	07:18	07:28
BSKR o	01:22	01:37		01:52	02:07		02:22	02:37		02:52	03:07		03:22	03:37		03:52	04:07		04:22	04:37	04:52	05:07	05:22	05:37	05:52	06:07	06:22	06:37	06:50	07:00	07:10	07:20	07:30
nach	↻	HAL		↻	HAL		↻	HAL		↻	HAL		↻	↻		↻	↻		↻	↻	↻	↻	↻	↻	↻	↻	↻	↻	↻	↻	↻	↻	↻

BADL	3/4	3	45	Schönefeld ✈
			46	Königs Wusterhausen
			8	Zeuthen
			85	Grünau
			9	Schönefeld ✈
		4	45	Südkreuz
			46	Westend
			8	Birkenwerder
			85	Pankow
			9	Spandau
BAF	41	41	7	**Ankunft**
			7	**Potsdam Hbf**
	42/44	42	7	**Ankunft**
			7	**Potsdam Hbf**
		44		Regionalverkehr
BAGL	1/2	1	45	Schönefeld ✈
			9	Schönefeld ✈
		2	45	Südkreuz
			9	Spandau
BAHU	A	1		kein Zugverkehr
		2	1	Wannsee
			2	Blankenfelde
			25	Teltow Stadt
			26	Teltow Stadt
	B	3	1	Oranienburg
		4	2	Bernau
			25	Hennigsdorf
			26	Waidmannslust
BALX	B	3	3	Erkner
			5	Strausberg Nord
			7	Ahrensfelde
			9	Schönefeld ✈
		4	3	Spandau
			5	Westkreuz
			7	Potsdam Hbf
			9	Spandau
BARF	1	1	25	Teltow Stadt
			25	Hennigsdorf
BATS	1/2	1	2	Blankenfelde
		2	2	Bernau
BBAB	1/2	1	7	Potsdam Hbf
		2	7	Ahrensfelde
BBCH	1/2	1	2	Blankenfelde
		2	2	Bernau
BBDF	1	1	5	Westkreuz
	2	2	5	Strausberg Nord
BBER	1/2	2	2	**Ankunft**
			2	**Blankenfelde**
BBEU	1/2	1	41	Ring ↻
			46	Gesundbrunnen
		2	42	Ring ↻
			46	Königs Wusterhausen
BBEV	3/4	3	3	Erkner
			5	Strausberg Nord
			7	Ahrensfelde
			9	Schönefeld ✈
		4	3	Spandau
			5	Westkreuz
			7	Potsdam Hbf
			9	Spandau
BBFD	3	3	2	**Ankunft**
			2	**Bernau**
BBFE	1/2	1	8	Zeuthen
		2	8	Birkenwerder
BBGT	1/2	1	1	Wannsee
		2	1	Oranienburg
BBIS	1/2	1	5	Westkreuz
		2	5	Strausberg Nord
BBIW	4/6	4	1	Oranienburg
			8	**Ankunft**
		6	1	Wannsee
			8	**Zeuthen**
BBLB	1/4	1	2	Blankenfelde
			8	Zeuthen
			8	**Zeuthen**
		4	2	Bernau
			8	Birkenwerder
			8	**Ankunft**
BBMW	A	3	8	Zeuthen
			85	Grünau
			9	Schönefeld ✈
		5	45	Schönefeld ✈
			46	Königs Wusterhausen
			47	Spindlersfeld
	B	4	45	Südkreuz
			46	Westend
			47	Hermannstraße
			8	Birkenwerder
			85	Pankow
			9	Spandau
BBOR	1/2	1	1	Oranienburg
		2	1	Wannsee

BBOS	A	1	1	Wannsee
			25	Teltow Stadt
			26	Teltow Stadt
		2	2	Blankenfelde
			8	Zeuthen
			85	Grünau
	B	3	2	Bernau
			8	Birkenwerder
			85	Pankow
		4	1	Oranienburg
			25	Hennigsdorf
			26	Waidmannslust
BBRF	1	1	2	Bernau
			2	Blankenfelde
BBU	1/2	1	2	Blankenfelde
			2	**Lichtenrade**
		2	2	**Ankunft**
			2	Bernau
BBUP	1/2	1	41	Ring ↻
			46	Westend
		2	42	Ring ↻
			46	Königs Wusterhausen
BCHS	C	5	3	Erkner
		6	5	Strausberg Nord
			7	Ahrensfelde
			9	Schönefeld ✈
	D	7	7	Potsdam Hbf
		8	3	Spandau
			5	Westkreuz
			9	Spandau
BE	31/32	31	3	**Ankunft**
			3	**Westkreuz**
		32	3	**Ankunft**
			3	**Westkreuz**
BEBD	2	2	25	Teltow Stadt
			25	Hennigsdorf
BEIW	3/4	3	46	Königs Wusterhausen
			8	Zeuthen
		4	46	Westend
			8	Birkenwerder
BFA	1/2	1	41	Ring ↻
			8	Zeuthen
			85	Grünau
		2	42	Ring ↻
			8	Birkenwerder
			85	Pankow
BFB	1/2	1	1	Wannsee
		2	1	Oranienburg
BFD	15/16	15	5	Strausberg Nord
		16	5	Westkreuz
BFFO	1/2	1	5	Strausberg Nord
			7	Ahrensfelde
			75	Wartenberg
		2	5	Westkreuz
			7	Potsdam Hbf
			75	Ostbahnhof
BFLH ✈	A	11	45	**Ankunft**
			45	**Südkreuz**
		13	9	**Ankunft**
			9	**Spandau**
BFOH	1/2	1	1	**Ankunft**
			1	Oranienburg
		2	1	Wannsee
			1	**Wannsee**
BFRH	1/2	1	3	Spandau
			3	**Spandau**
		2	3	**Ankunft**
			3	Erkner
BFRU	1/2	1	1	Wannsee
		2	1	Oranienburg
BFST	C	5	3	Erkner
			5	Strausberg Nord
			7	Ahrensfelde
			9	Schönefeld ✈
		6	3	Spandau
			5	Westkreuz
			7	Potsdam Hbf
			9	Spandau
BFSTT	D	11	1	Wannsee
			2	Blankenfelde
			25	Teltow Stadt
			26	Teltow Stadt
		12	1	Oranienburg
			2	Bernau
			25	Hennigsdorf
			26	Waidmannslust

BGAS	A	1	46	Königs Wusterhausen
			8	Zeuthen
		2	8	**Ankunft**
			85	**Ankunft**
	B	3	8	**Birkenwerder**
			85	**Pankow**
		4	46	Westend
			8	Birkenwerder
BGB	A	1	1	Wannsee
			2	Blankenfelde
			25	Teltow Stadt
			26	Teltow Stadt
		2	42	Ring ↻
			46	**Königs Wusterhausen**
	B	3	41	Ring ↻
			46	**Ankunft**
		4	1	Oranienburg
			2	Bernau
			25	Hennigsdorf
			26	Waidmannslust
BGBA	1/2	1	45	Schönefeld ✈
			9	Schönefeld ✈
		2	45	Südkreuz
			9	Spandau
BGGS	1/2	1	1	Wannsee
		2	1	Oranienburg
BGRI	1/2	1	7	Potsdam Hbf
		2	7	Ahrensfelde
BGSE	51/52	51	75	Wartenberg
		52	75	Ostbahnhof
BGSS	1/2	1	41	Ring ↻
			8	Zeuthen
			85	Grünau
		2	42	Ring ↻
			8	Birkenwerder
			85	Pankow
BGWD	A	1	7	Potsdam Hbf
		2	3	**Ankunft**
			5	**Ankunft**
			7	**Ankunft**
	B	3	3	**Erkner**
			5	**Mahlsdorf**
			7	**Ahrensfelde**
		4	7	Ahrensfelde
BHAL	1/2	1	41	Ring ↻
			46	Westend
		2	42	Ring ↻
			46	Königs Wusterhausen
BHBF	15/16	15	3	Erkner
			5	Strausberg Nord
			7	Ahrensfelde
			9	Schönefeld ✈
		16	3	Spandau
			5	Westkreuz
			7	Potsdam Hbf
			9	Spandau
BHD	A	1	25	**Ankunft**
			25	**Teltow Stadt**
				Regionalverkehr
		5	25	**Ankunft**
			25	**Teltow Stadt**
				Regionalverkehr
BHED	1/2	1	1	Oranienburg
		2	1	Wannsee
BHEI	1/2	1	41	Ring ↻
			46	Westend
		2	42	Ring ↻
			46	Königs Wusterhausen
BHER	1/2	1	41	Ring ↻
			45	Südkreuz
			46	Westend
			47	**Ankunft**
		2	42	Ring ↻
			45	Schönefeld ✈
			46	Königs Wusterhausen
			47	**Spindlersfeld**
BHGM	1	1	5	Strausberg Nord
			5	Westkreuz
BHH	1/2	1	75	Wartenberg
		2	75	Ostbahnhof
BHI	1/2	1	3	Westkreuz
		2	3	Erkner
BHKM	3/4	3	3	Erkner
			5	Strausberg Nord
			7	Ahrensfelde
			9	Schönefeld ✈
		4	3	Spandau
			5	Westkreuz
			7	Potsdam Hbf
			9	Spandau

BHLS	1/2	1	25	Hennigsdorf
		2	25	Teltow Stadt
BHN	3/4	3	1	Oranienburg
			8	Birkenwerder
		4	1	Wannsee
			8	Zeuthen
BHO	1/2	1	41	Ring ↻
			46	Westend
		2	42	Ring ↻
			46	Königs Wusterhausen
BHPG	4/5	4	5	**Ankunft**
			5	**Westkreuz**
			5	Strausberg Nord
			5	Westkreuz
		5		kein Zugverkehr
BHST	1/2	1	3	Erkner
			9	Schönefeld ✈
		2	3	Spandau
			9	Spandau
BHUM	1/2	1	1	Wannsee
			2	Blankenfelde
			25	Teltow Stadt
			26	Teltow Stadt
		2	1	Oranienburg
			2	Bernau
			25	Hennigsdorf
			26	Waidmannslust
BIP	1/2	1	41	Ring ↻
			46	Westend
		2	42	Ring ↻
			46	Königs Wusterhausen
BJB	3/4	3	3	Erkner
			5	Strausberg Nord
			7	Ahrensfelde
			9	Schönefeld ✈
		4	3	Spandau
			5	Westkreuz
			7	Potsdam Hbf
			9	Spandau
BJLB	1	1	1	Wannsee
		2	1	Oranienburg
BJUN	B	5	41	Ring ↻
			46	Gesundbrunnen
		6	42	Ring ↻
			46	Königs Wusterhausen
BKAD	1/2	1	5	Westkreuz
		2	5	Strausberg Nord
BKBO	2	2	25	Teltow Stadt
			25	Hennigsdorf
BKHD	1/2	1	45	Südkreuz
			46	Westend
			47	Hermannstraße
		2	45	Schönefeld ✈
			46	Königs Wusterhausen
			47	Spindlersfeld
BKLH	11/12	11	3	Spandau
		12	3	Erkner
BKPK	1/2	1	3	Spandau
		2	3	Erkner
BKRW	3/4	3	2	Bernau
				Regionalverkehr
		4	2	Blankenfelde
BKW	B	2	46	**Ankunft**
			46	**Westend**
		3		Regionalverkehr
BLAK	2	2	25	Teltow Stadt
			26	Teltow Stadt
			25	Hennigsdorf
			26	Waidmannslust
BLEN	1/2	1	1	Oranienburg
		2	1	Wannsee
BLI	1/2	1	5	Strausberg Nord
			5	**Mahlsdorf**
			7	Ahrensfelde
			75	Wartenberg
			75	**Wartenberg**
		2	5	Westkreuz
			5	**Ankunft**
			7	Potsdam Hbf
			75	Ostbahnhof
			75	**Ankunft**
BLIO	1/2	1	25	Teltow Stadt
			26	Teltow Stadt
		2	25	Hennigsdorf
			26	Waidmannslust
BLIS	1/2	1	25	Teltow Stadt
			26	Teltow Stadt
		2	25	Hennigsdorf
			26	Waidmannslust

BLRD	1/2	1	2	Blankenfelde
			2	Bernau
		2	2	**Ankunft**
			2	**Buch**
BLST	1/2	1	41	Ring ↻
			8	Zeuthen
			85	Grünau
		2	42	Ring ↻
			8	Birkenwerder
			85	Pankow
BLWE	1/2	1	1	Wannsee
		2	1	Oranienburg
BMAH	2/3	2	2	Bernau
		3	2	Blankenfelde
BMAZ	1/2	1	7	Ahrensfelde
		2	7	Potsdam Hbf
BMDF	1/2	1	5	**Ankunft**
			5	**Westkreuz**
			5	**Lichtenberg**
		2	5	Westkreuz
	3/4	3	5	Strausberg Nord
		4	5	**Ankunft**
			5	**Strausberg Nord**
BMEA	1/2	1	7	Ahrensfelde
		2	7	Potsdam Hbf
BMEX	1/2	1	1	Wannsee
		2	1	Oranienburg
BMF	1/2	1	2	Blankenfelde
		2	2	Bernau
BMM	6	6	8	Birkenwerder
			8	Zeuthen
BMN	1/2	1	41	Ring ↻
			46	Westend
		2	42	Ring ↻
			46	Königs Wusterhausen
BMS	1/2	1	3	Erkner
			9	Schönefeld ✈
		2	3	Spandau
			9	Spandau
BNB	A	1	1	Wannsee
			2	Blankenfelde
			25	Teltow Stadt
			26	Teltow Stadt
		2	25	**Teltow Stadt**
	B	3	25	**Ankunft**
		4	1	Oranienburg
			2	Bernau
			25	Hennigsdorf
			26	Waidmannslust
BNIS	3/4	3	7	Potsdam Hbf
		4	7	Ahrensfelde
BNIW	1/2	1	1	Wannsee
		2	1	Oranienburg
BNG	1	1	5	Strausberg Nord
			5	Westkreuz
BNK	1/2	1	41	Ring ↻
			45	Südkreuz
			46	Westend
			47	Hermannstraße
		2	42	Ring ↻
			45	Schönefeld ✈
			46	Königs Wusterhausen
			47	Spindlersfeld
BNPL	1/2	1	5	Strausberg Nord
			7	Ahrensfelde
			75	Wartenberg
		2	5	Westkreuz
			7	Potsdam Hbf
			75	Ostbahnhof
BOK	F	11	41	Ring ↻
			8	Zeuthen
			85	Grünau
		12	42	Ring ↻
			8	Birkenwerder
			85	Pankow
BOKS	D	5	3	Ostbahnhof
			5	Westkreuz
			75	Ostbahnhof
		6	3	Spandau
			5	Westkreuz
			7	Potsdam Hbf
			75	Ostbahnhof
	E	3	3	Erkner
			5	Strausberg Nord
			7	Ahrensfelde
		4	75	Wartenberg

BOLS	A	1	3	Erkner
			9	Schönefeld ✈
		2	3	Spandau
			9	Spandau
	B-E			bei Veranstaltungen
BORB	A	30	1	**Ankunft**
			1	**Wannsee**
		32		kein Zugverkehr
BORS	1/2	1	1	Wannsee
			2	Blankenfelde
			25	Teltow Stadt
			26	Teltow Stadt
		2	1	Oranienburg
			2	Bernau
			25	Hennigsdorf
			26	Waidmannslust
BOSB	D	8	3	Erkner
			5	Strausberg Nord
			7	Ahrensfelde
			9	Schönefeld ✈
		9	3	**Erkner**
			75	**Ankunft**
			75	**Wartenberg**
	E	10	3	**Ankunft**
		11	3	Spandau
			5	Westkreuz
			7	Potsdam Hbf
			9	Spandau
BOSP	1	1	47	Spindlersfeld
			47	Hermannstraße
BOSS	1/2	1	25	Teltow Stadt
			26	Teltow Stadt
		2	25	Hennigsdorf
			26	Waidmannslust
BPDH	C	6	7	**Ankunft**
			7	**Ahrensfelde**
		7	7	**Ankunft**
			7	**Ahrensfelde**
BPEN	1	1	5	Strausberg Nord
			5	Westkreuz
BPHD	1/2	1	2	Blankenfelde
			8	Zeuthen
		2	2	Bernau
			8	Birkenwerder
BPIC	1/2	1	3	Erkner
			9	Schönefeld ✈
		2	3	Spandau
			9	Spandau
BPKW	1/2	1	2	Bernau
			8	Birkenwerder
			85	**Ankunft**
		2	2	Blankenfelde
			8	Zeuthen
			85	**Grünau**
BPLA	1/2	1	41	Ring ↻
			8	Zeuthen
			85	Grünau
		2	42	Ring ↻
			8	Birkenwerder
			85	Pankow
BPOE	1/2	1	7	Ahrensfelde
		2	7	Potsdam Hbf
BPOP	A	11	1	Wannsee
			2	Blankenfelde
			25	Teltow Stadt
			26	Teltow Stadt
		12	1	**Zehlendorf**
			26	**Teltow Stadt**
	B	14	1	Oranienburg
			1	**Ankunft**
			2	Bernau
			25	Hennigsdorf
			26	Waidmannslust
			26	**Ankunft**
BPRS	A	1	2	Blankenfelde
		3	25	Teltow Stadt
			26	Teltow Stadt
	B	2	2	Bernau
		4	25	Hennigsdorf
			26	Waidmannslust
BPWA	3/4	3	8	Zeuthen
			85	Grünau
			9	Schönefeld ✈
		4	8	Birkenwerder
			85	Pankow
			9	Spandau

BRB	1/2	1	3	Spandau
		2	3	Erkner
BRD	1/2	1	3	Spandau
		2	3	Erkner
BRGT	1	1	2	Blankenfelde
			2	Bernau
BRH	1/2	1	3	Spandau
		2	3	Erkner
BRST	1/2	1	1	Wannsee
		2	1	Oranienburg
BRW	1/2	1	7	Ahrensfelde
		2	7	Potsdam Hbf
BSAL	1/2	1	41	Ring ⟳
			8	Zeuthen
			85	Grünau
		2	42	Ring ⟳
			8	Birkenwerder
			85	Pankow
BSAP	3/4	3	3	Erkner
			5	Strausberg Nord
			7	Ahrensfelde
			9	Schönefeld ✈
		4	3	Spandau
			5	Westkreuz
			7	Potsdam Hbf
			9	Spandau
BSC	1/2	1	2	Blankenfelde
		2	2	Bernau
BSCF	3/4	3	45	Schönefeld ✈
			46	Königs Wusterhausen
			8	Zeuthen
			85	Grünau
			9	Schönefeld ✈
		4	45	Südkreuz
			46	Westend
			8	Birkenwerder
			85	Pankow
			9	Spandau
BSLS	1/2	1	1	Wannsee
		2	1	Oranienburg
BSDE	1/2	1	25	Teltow Stadt
			26	Teltow Stadt
		2	25	Hennigsdorf
			26	Waidmannslust
BSDG	1/2	1	1	Wannsee
		2	1	Oranienburg
BSGR	11/12	11	41	Ring ⟳
			46	Westend
		12	42	Ring ⟳
			46	Königs Wusterhausen
BSGV	1/2	1	1	Wannsee
		2	1	Oranienburg
BSKR	11/12	11	41	Ring ⟳
			45	**Ankunft**
			46	Westend
		12	42	Ring ⟳
			45	**Schönefeld ✈**
			46	Königs Wusterhausen
BSKV	1/2	1	2	Blankenfelde
			25	Teltow Stadt
			26	Teltow Stadt
		2	2	Bernau
			25	Hennigsdorf
			26	Waidmannslust
BSNF	6/8	6	8	Birkenwerder
		8	8	Zeuthen
BSNH	3/4	3	1	Oranienburg
			25	Hennigsdorf
			26	Waidmannslust
		4	1	Wannsee
			25	Teltow Stadt
			26	Teltow Stadt
BSO	1/2	1	41	Ring ⟳
		2	42	Ring ⟳
BSPA	A	1	3	**Ankunft**
			3	**Erkner**
		2	9	**Ankunft**
			9	**Schönefeld ✈**
BSPF	1	1	47	**Ankunft**
			47	**Hermannstraße**
BSPH	20/21	20	7	Potsdam Hbf
			75	Ostbahnhof
		21	7	Ahrensfelde
			75	Wartenberg
BSRW	1/2	1	3	Spandau
			9	Spandau
		2	3	Erkner
			9	Schönefeld ✈

BSTN	1	1	5	**Ankunft**
			5	**Westkreuz**
BSTO	1/2	1	41	Ring ⟳
			8	Zeuthen
			85	Grünau
		2	42	Ring ⟳
			8	Birkenwerder
			85	Pankow
BSTR	1	1	5	Strausberg Nord
			5	Westkreuz
BSTV	8/9	8	5	Strausberg Nord
			5	Westkreuz
		9	5	**Ankunft**
			5	**Westkreuz**
BSW	3/4	3	45	Schönefeld ✈
			46	Königs Wusterhausen
			47	Spindlersfeld
			47	**Ankunft**
			47	**Spindlersfeld**
			8	Zeuthen
			85	Grünau
			9	Schönefeld ✈
		4		**kein Zugverkehr**
	5/6	5	85	**kein Zugverkehr**
		6	45	Südkreuz
			46	Westend
			47	Hermannstraße
			8	Birkenwerder
			85	Pankow
			9	Spandau
BSZF	1	1	25	Teltow Stadt
			25	Hennigsdorf
BTG	1/6	1	25	Hennigsdorf
		6	25	Teltow Stadt
BTGN	3/4	3	3	Erkner
			5	Strausberg Nord
			7	Ahrensfelde
			9	Schönefeld ✈
		4	3	Spandau
			5	Westkreuz
			7	Potsdam Hbf
			9	Spandau
BTHF	1/2	1	41	Ring ⟳
			45	Südkreuz
			46	Westend
		2	42	Ring ⟳
			45	Schönefeld ✈
			46	Königs Wusterhausen
BTLS	1/2	1	26	**Ankunft**
			26	**Waidmannslust**
		2	25	**Ankunft**
			25	**Hennigsdorf**
BTOR	1/2	1	1	Wannsee
			2	Blankenfelde
			25	Teltow Stadt
			26	Teltow Stadt
		2	1	Oranienburg
			2	Bernau
			25	Hennigsdorf
			26	Waidmannslust
BTP	A	1	41	Ring ⟳
			85	Grünau
		3	8	Zeuthen
			9	Schönefeld ✈
	B	2	42	Ring ⟳
			8	Birkenwerder
		4	85	Pankow
			9	Spandau
BWAB	11/12	11	75	**Ankunft**
			75	**Ostbahnhof**
		12	75	**Ankunft**
			75	**Ostbahnhof**
BWAI	1/2	1	1	Oranienburg
			26	**Ankunft**
		2	1	Wannsee
			26	**Teltow Stadt**
BWED	1/2	1	41	Ring ⟳
			46	Gesundbrunnen
		2	42	Ring ⟳
			46	Königs Wusterhausen

BWES	1/2	1	41	Ring ⟳
			46	Gesundbrunnen
			46	**Ankunft**
		2	42	Ring ⟳
			46	Königs Wusterhausen
			46	**Königs Wusterhausen**
BWH		1	41	Ring ⟳
			46	Gesundbrunnen
		2	42	Ring ⟳
			46	Königs Wusterhausen
BWHH	1/2	1	3	Spandau
		2	3	Erkner
BWI	3/4	3	46	Königs Wusterhausen
		4	46	Westend
BWIG	1/2	1	3	Spandau
		2	3	Erkner
BWIN		1	1	Oranienburg
			26	Waidmannslust
		2	1	Wannsee
			26	Teltow Stadt
BWKRR	11/12	11	41	Ring ⟳
			46	Westend
		12	42	Ring ⟳
			46	Königs Wusterhausen
BWKS	A	1	3	Spandau
			7	Potsdam Hbf
			9	Spandau
		2	5	**Ankunft**
	B	3	5	**Strausberg Nord**
		4	3	Erkner
			7	Ahrensfelde
			9	Schönefeld ✈
BWM	1/2	1	1	Oranienburg
			26	Waidmannslust
		2	1	Wannsee
			26	Teltow Stadt
BWOK	3/4	3	1	Oranienburg
			25	Hennigsdorf
			26	Waidmannslust
		4	1	Wannsee
			25	Teltow Stadt
			26	Teltow Stadt
BWRS	A	1	3	Erkner
			5	Strausberg Nord
			7	Ahrensfelde
			9	Schönefeld ✈
		2	3	Erkner
			75	Wartenberg
			75	**Wartenberg**
	B	3	3	Ostbahnhof
			75	Ostbahnhof
			75	**Ankunft**
		4	3	Spandau
			5	Westkreuz
			7	Potsdam Hbf
			75	Ostbahnhof
			9	Spandau
BWSS	A	1	7	Potsdam Hbf
		2	1	**Ankunft**
	B	3	1	**Oranienburg**
		4	7	Ahrensfelde
BWT	11/1	11	5	Westkreuz
		1	U5	Alexanderplatz
	12/2	2	U5	Hönow
		12	5	Strausberg Nord
BYOR	1/2	1	2	Blankenfelde
			25	Teltow Stadt
			26	Teltow Stadt
		2	2	Bernau
			25	Hennigsdorf
			26	Waidmannslust
BZD	1/2	1	1	Wannsee
			1	**Ankunft**
		2	1	Oranienburg
			1	**Potsdamer Platz**
BZEP	4/6	4	2	Bernau
		6	2	Blankenfelde
BZOS	5/6	5	3	Erkner
			5	Strausberg Nord
			7	Ahrensfelde
			9	Schönefeld ✈
		6	3	Spandau
			5	Westkreuz
			7	Potsdam Hbf
			9	Spandau
BZTH	3/4	3	46	Königs Wusterhausen
			8	**Ankunft**
			8	**Birkenwerder**
		4	46	Westend

Nachtverkehr				
BADL	3/4	3	46	Königs Wusterhausen
			8	Grünau
			9	Schönefeld ✈
		4	46	Südkreuz
			8	Pankow
			9	Spandau
BAF	41/42	41	7	**Ankunft**
			7	**Potsdam Hbf**
		42		**kein Zugverkehr**
BAGL	1/2	1	9	Schönefeld ✈
		2	9	Spandau
BAHU	1/2	1		**kein Zugverkehr**
		2	1	Wannsee
			2	Blankenfelde
			25	Teltow Stadt
	3/4	3	1	Oranienburg
		4	2	Bernau
			25	Hennigsdorf
BALX	3/4	3	7	Ahrensfelde
			9	Schönefeld ✈
		4	7	Potsdam Hbf
			9	Spandau
BARF	1	1	25	Teltow Stadt
			25	Hennigsdorf
BATS	1/2	1	2	Blankenfelde
		2	2	Bernau
BBAB	1/2	1	7	Potsdam Hbf
		2	7	Ahrensfelde
BBCH	1/2	1	2	Blankenfelde
		2	2	Bernau
BBDF	1	1	5	Ostbahnhof
	2	2	5	Mahlsdorf
BBER	1/2	2	2	**Ankunft**
			2	**Blankenfelde**
BBEU	1/2	1	41	Ring ⟳
		2	42	Ring ⟳
			42	Halensee
BBEV	3/4	3	7	Ahrensfelde
			9	Schönefeld ✈
		4	7	Potsdam Hbf
			9	Spandau
BBFD	3	3	2	**Ankunft**
			2	**Bernau**
BBFE	1/2			**kein Zugverkehr**
BBGT	1/2	1	1	Wannsee
		2	1	Oranienburg
BBIS	1/2	1	5	Mahlsdorf
		2	5	Strausberg Nord
BBIW	4/6	4	1	Oranienburg
		6	1	Wannsee
BBLB	1/4	1	2	Blankenfelde
		4	2	Bernau
BBMW	3/5	3	8	Grünau
			9	Schönefeld ✈
		5	46	Königs Wusterhausen
	4	4	46	Südkreuz
			8	Pankow
			9	Spandau
BBOR	1/2	1	1	Oranienburg
		2	1	Wannsee
BBOS	A	1	1	Wannsee
			25	Teltow Stadt
		2	2	Blankenfelde
			8	Grünau
	B	3	2	Bernau
			8	Pankow
		4	1	Oranienburg
			25	Hennigsdorf
BBRF	1	1	2	Bernau
			2	Blankenfelde
BBU	1/2	1	2	Blankenfelde
		2	2	Bernau
BBUP	1/2	1	41	Ring ⟳
			41	Westend
		2	42	Ring ⟳

BCHS	5/6	5		**kein Zugverkehr**
		6	7	Ahrensfelde
			9	Schönefeld ✈
	7/8	7		**kein Zugverkehr**
		8	7	Potsdam Hbf
			9	Spandau
BE	31/32	31	3	**Ankunft**
			3	**Ostkreuz**
		32		**kein Zugverkehr**
	34	34		**kein Zugverkehr**
BEBD	2	2	25	Teltow Stadt
			25	Hennigsdorf
BEIW	3/4	3	46	Königs Wusterhausen
		4	46	Südkreuz
BFA	1/2	1	41	Ring ⟳
			8	Grünau
		2	42	Ring ⟳
			8	Pankow
BFB	1/2	1	1	Wannsee
		2	1	Oranienburg
BFD	15/16	15	5	Strausberg Nord
		16	5	Mahlsdorf
BFFO	1/2	1	5	Mahlsdorf
			7	Ahrensfelde
			75	Wartenberg
		2	5	Ostbahnhof
			7	Potsdam Hbf
			75	Lichtenberg
BFLH ✈	11/13	11		**kein Zugverkehr**
		13	9	**Ankunft**
			9	**Spandau**
BFOH	1/2	1	1	Oranienburg
		2	1	Wannsee
BFRH	1/2	1	3	Ostkreuz
		2	3	Erkner
BFRU	1/2	1	1	Wannsee
		2	1	Oranienburg
BFST	5/6	5	7	Ahrensfelde
			9	Schönefeld ✈
		6	7	Potsdam Hbf
			9	Spandau
BFSTT	11/12	11	1	Wannsee
			2	Blankenfelde
			25	Teltow Stadt
		12	1	Oranienburg
			2	Bernau
			25	Hennigsdorf
BGAS	1/2	1	46	Königs Wusterhausen
		2	8	**Ankunft**
	3/4	3	8	**Pankow**
		4	46	Südkreuz
BGB	1/2	1	1	Wannsee
			2	Blankenfelde
			25	Teltow Stadt
		2	42	Ring ⟳
			42	Halensee
	3/4	3	41	Ring ⟳
		4	1	Oranienburg
			2	Bernau
			25	Hennigsdorf
BGBA	1/2	1	9	Schönefeld ✈
		2	9	Spandau
BGGS	1/2	1	1	Wannsee
		2	1	Oranienburg
BGRI	1/2	1	7	Potsdam Hbf
		2	7	Ahrensfelde
BGSE	51/52	51	75	Wartenberg
		52	75	Lichtenberg
BGSS	1/2	1	41	Ring ⟳
			8	Grünau
		2	42	Ring ⟳
			8	Pankow
BGWD	1/2	1	7	Potsdam Hbf
		2		**kein Zugverkehr**
	3/4	3		**kein Zugverkehr**
		4	7	Ahrensfelde
BHAL	1/2	1	41	Ring ⟳
			41	**Ring ⟳**
			41	Westend
		2	42	Ring ⟳
			42	**Ankunft**

BHBF	15/16	15	7	Ahrensfelde
			9	Schönefeld ✈
		16	7	Potsdam Hbf
			9	Spandau
BHD	1/5	1	25	**Ankunft**
			25	**Teltow Stadt**
		5	25	**Ankunft**
			25	**Teltow Stadt**
BHED	1/2	1	1	Oranienburg
		2	1	Wannsee
BHEI	1/2	1	41	Ring ⟳
			41	Westend
		2	42	Ring ⟳
BHER	1/2	1	41	Ring ⟳
			41	Westend
			46	Südkreuz
		2	42	Ring ⟳
			46	Königs Wusterhausen
BHGM	1	1	5	Strausberg Nord
			5	Mahlsdorf
BHH	1/2	1	75	Wartenberg
		2	75	Lichtenberg
BHI	1/2	1	3	Ostkreuz
		2	3	Erkner
BHKM	3/4	3	7	Ahrensfelde
			9	Schönefelde ✈
		4	7	Potsdam Hbf
			9	Spandau
BHLS	1/2	1	25	Hennigsdorf
		2	25	Teltow Stadt
BHN	3/4	3	1	Oranienburg
		4	1	Wannsee
BHO	1/2	1	41	Ring ⟳
			41	Westend
		2	42	Ring ⟳
BHPG	4/5	4	5	Strausberg Nord
			5	Mahlsdorf
		5		**kein Zugverkehr**
BHST	1/2	1	9	Schönefeld ✈
		2	9	Spandau
BHUM	1/2	1	1	Wannsee
			2	Blankenfelde
			25	Teltow Stadt
		2	1	Oranienburg
			2	Bernau
			25	Hennigsdorf
BIP	1/2	1	41	Ring ⟳
			41	Westend
		2	42	Ring ⟳
BJB	3/4	3	7	Ahrensfelde
			9	Schönefeld ✈
		4	7	Potsdam Hbf
			9	Spandau
BJLB	1/2	1	1	Wannsee
		2	1	Oranienburg
BJUN	5/6	5	41	Ring ⟳
		6	42	Ring ⟳
			42	Halensee
BKAD	1/2	1	5	Mahlsdorf
		2	5	Strausberg Nord
BKBO	2	2	25	Teltow Stadt
			25	Hennigsdorf
BKHD	1/2	1	46	Südkreuz
		2	46	Königs Wusterhausen
BKLH	11/12	11	3	Ostkreuz
		12	3	Erkner
BKPK	1/2	1	3	Ostkreuz
		2	3	Erkner
BKRW	3/4	3	2	Bernau
		4	2	Blankenfelde
BKW	2	2	46	**Ankunft**
			46	**Südkreuz**
BLAK	2	2	25	Teltow Stadt
			25	Hennigsdorf
BLEN	1/2	1	1	Oranienburg
		2	1	Wannsee

BLI	1/2	1	5	Mahlsdorf
			7	Ahrensfelde
			75	**Wartenberg**
		2	5	Ostbahnhof
			7	Potsdam Hbf
			75	**Ankunft**
BLIO	1/2	1	25	Teltow Stadt
		2	25	Hennigsdorf
BLIS	1/2	1	25	Teltow Stadt
		2	25	Hennigsdorf
BLRD	1/2	1	2	Blankenfelde
			2	Bernau
		2		kein Zugverkehr
BLST	1/2	1	41	Ring ⟲
			8	Grünau
		2	42	Ring ⟲
			42	Halensee
			8	Pankow
BLWE	1/2	1	1	Wannsee
		2	1	Oranienburg
BMAH	2/3	2	2	Bernau
		3	2	Blankenfelde
BMAZ	1/2	1	7	Ahrensfelde
		2	7	Potsdam Hbf
BMDF	1/2			kein Zugverkehr
	3/4	3	5	**Ankunft**
			5	**Ostbahnhof**
		4	5	**Ankunft**
			5	**Strausberg Nord**
BMEA	1/2	1	7	Ahrensfelde
		2	7	Potsdam Hbf
BMEX	1/2	1	1	Wannsee
		2	1	Oranienburg
BMF	1/2	1	2	Blankenfelde
		2	2	Bernau
BMM	6	6		kein Zugverkehr
BMN	1/2	1	41	Ring ⟲
			41	Westend
		2	42	Ring ⟲
			42	Halensee
BMS	1/2	1	9	Schönefeld ✈
		2	9	Spandau
BNB	1/2	1	1	Wannsee
			2	Blankenfelde
			25	Teltow Stadt
		2		kein Zugverkehr
	3/4	3		kein Zugverkehr
		4	1	Oranienburg
			2	Bernau
			25	Hennigsdorf
BNIS	3/4	3	7	Potsdam Hbf
		4	7	Ahrensfelde
BNIW	1/2	1	1	Wannsee
		2	1	Oranienburg
BNG	1	1	5	Strausberg Nord
			5	Mahlsdorf
BNK	1/2	1	41	Ring ⟲
			41	Westend
			46	Südkreuz
		2	42	Ring ⟲
			46	Königs Wusterhausen
BNPL	1/2	1	5	Mahlsdorf
			7	Ahrensfelde
		2	5	Ostbahnhof
			7	Potsdam Hbf
BOK	F	11	41	Ring ⟲
			41	Westend
			8	Grünau
		12	42	Ring ⟲
			42	Halensee
			8	Pankow
BOKS	D	5	3	Ostbahnhof
			5	Ostbahnhof
		6	7	Potsdam Hbf
	E	3	3	Erkner
			7	Ahrensfelde
		4	5	Mahlsdorf
BOLS	A	1	9	Schönefeld ✈
		2	9	Spandau
BORB	A	30	1	**Ankunft**
			1	**Wannsee**
		32		kein Zugverkehr

BORS	1/2	1	1	Wannsee
			2	Blankenfelde
			25	Teltow Stadt
		2	1	Oranienburg
			2	Bernau
			25	Hennigsdorf
BOSB	D	8	7	Ahrensfelde
			9	Schönefeld ✈
		9	5	**Ankunft**
			5	**Mahlsdorf**
	E	10	3	**Ankunft**
			3	**Erkner**
		11	7	Potsdam Hbf
			9	Spandau
BOSP	1	1	47	Spindlersfeld
			47	Schöneweide
BOSS	1/2	1	25	Teltow Stadt
		2	25	Hennigsdorf
BPDH	C	6	7	**Ankunft**
			7	**Ahrensfelde**
		7		kein Zugverkehr
BPEN	1	1	5	Strausberg Nord
			5	Mahlsdorf
BPHD	1/2	1	2	Blankenfelde
		2	2	Bernau
BPIC	1/2	1	9	Schönefeld ✈
		2	9	Spandau
BPKW	1/2	1	2	Bernau
			8	**Ankunft**
		2	2	Blankenfelde
			8	**Grünau**
BPLA	1/2	1	41	Ring ⟲
			8	Grünau
		2	42	Ring ⟲
			42	Halensee
			8	Pankow
BPOE	1/2	1	7	Ahrensfelde
		2	7	Potsdam Hbf
BPOP	A	11	1	Wannsee
			2	Blankenfelde
			25	Teltow Stadt
		12		kein Zugverkehr
	B	13		kein Zugverkehr
		14	1	Oranienburg
			2	Bernau
			25	Hennigsdorf
BPRS	A	1	2	Blankenfelde
		3	25	Teltow Stadt
	B	2	2	Bernau
		4	25	Hennigsdorf
BPWA	3/4	3	8	Grünau
			9	Schönefeld ✈
		4	8	Pankow
			9	Spandau
BRB	1/2	1	3	Ostkreuz
		2	3	Erkner
BRD	1/2	1	3	Ostkreuz
		2	3	Erkner
BRGT	1	1	2	Blankenfelde
			2	Bernau
BRH	1/2	1	3	Ostkreuz
		2	3	Erkner
BRST	1/2	1	1	Wannsee
		2	1	Oranienburg
BRW	1/2	1	7	Ahrensfelde
		2	7	Potsdam Hbf
BSAL	1/2	1	41	Ring ⟲
			8	Grünau
		2	42	Ring ⟲
			42	Halensee
			8	Pankow
BSAP	3/4	3	7	Ahrensfelde
			9	Schönefeld ✈
		4	7	Potsdam Hbf
			9	Spandau
BSC	1/2	1	2	Blankenfelde
		2	2	Bernau
BSCF	3/4	3	46	Königs Wusterhausen
			8	Grünau
			9	Schönefeld ✈
		4	46	Südkreuz
			8	Pankow
			9	Spandau

BSLS	1/2	1	1	Wannsee
		2	1	Oranienburg
BSDE	1/2	1	25	Teltow Stadt
		2	25	Hennigsdorf
BSDG	1/2	1	1	Wannsee
		2	1	Oranienburg
BSGR	11/12	11	41	Ring ⟲
			41	Westend
		12	42	Ring ⟲
BSGV	1/2	1	1	Wannsee
		2	1	Oranienburg
BSKR	11/12	11	41	Ring ⟲
			41	Westend
			46	**Ankunft**
		12	42	Ring ⟲
			46	**Königs Wusterhausen**
BSKV	1/2	1	2	Blankenfelde
			25	Teltow Stadt
		2	2	Bernau
			25	Hennigsdorf
BSNF	6/8			kein Zugverkehr
BSNH	3/4	3	1	Oranienburg
			25	Hennigsdorf
		4	1	Wannsee
			25	Teltow Stadt
BSO	1/2	1	41	Ring ⟲
			41	Westend
		2	42	Ring ⟲
BSPA	1/2	1	9	**Ankunft**
			9	**Schönefeld ✈**
		2	9	**Ankunft**
			9	**Schönefeld ✈**
BSPF	1	1	47	**Ankunft**
			47	**Schöneweide**
BSPH	20/21	20	7	Potsdam Hbf
			75	Lichtenberg
		21	7	Ahrensfelde
			75	Wartenberg
BSRW	1/2	1	9	Spandau
		2	9	Schönefeld ✈
BSTN	1	1	5	**Ankunft**
			5	**Mahlsdorf**
BSTO	1/2	1	41	Ring ⟲
			8	Grünau
		2	42	Ring ⟲
			42	Halensee
			8	Pankow
BSTR	1	1	5	Strausberg Nord
			5	Mahlsdorf
BSTV	8/9	8	5	Strausberg Nord
			5	Mahlsdorf
		9		kein Zugverkehr
BSW	3/4	3	46	Königs Wusterhausen
			8	Grünau
			9	Schönefeld ✈
		4		kein Zugverkehr
	5/6	5		kein Zugverkehr
		6	46	Südkreuz
			47	**Ankunft**
			47	**Spindlersfeld**
			8	Pankow
			9	Spandau
BSZF	1	1	25	Teltow Stadt
			25	Hennigsdorf
BTG	1/6	1	25	Hennigsdorf
		6	25	Teltow Stadt
BTGN	3/4	3	7	Ahrensfelde
			9	Schönefeld ✈
		4	7	Potsdam Hbf
			9	Spandau
BTHF	1/2	1	41	Ring ⟲
			41	Westend
			46	Südkreuz
		2	42	Ring ⟲
			46	Königs Wusterhausen
BTLS	1/2	1		kein Zugverkehr
		2	25	**Ankunft**
			25	**Hennigsdorf**

BTOR	1/2	1	1	Wannsee
			2	Blankenfelde
			25	Teltow Stadt
		2	1	Oranienburg
			2	Bernau
			25	Hennigsdorf
BTP	A	1	41	Ring ⟲
			41	Westend
		3	8	Grünau
			9	Schönefeld ✈
	B	2	42	Ring ⟲
			8	Pankow
		4	9	Spandau
BWAB	11/12	11		kein Zugverkehr
		12	75	**Ankunft**
			75	**Lichtenberg**
BWAI	1/2	1	1	Oranienburg
		2	1	Wannsee
BWED	1/2	1	41	Ring ⟲
		2	42	Ring ⟲
			42	Halensee
BWES	1/2	1	41	Ring ⟲
			41	**Ankunft**
		2	42	Ring ⟲
			42	**Ring ⟲**
			42	Halensee
BWH		1	41	Ring ⟲
		2	42	Ring ⟲
			42	Westend
BWHH	1/2	1	3	Ostkreuz
		2	3	Erkner
BWI	3/4	3	46	Königs Wusterhausen
		4	46	Südkreuz
BWIG	1/2	1	3	Ostkreuz
		2	3	Erkner
BWIN		1	1	Oranienburg
		2	1	Wannsee
BWKRR	11/12	11	41	Ring ⟲
			41	Westend
		12	42	Ring ⟲
			42	Halensee
BWKS	A	1	7	Potsdam Hbf
			9	Spandau
		2		kein Zugverkehr
	B	3		kein Zugverkehr
		4	7	Ahrensfelde
			9	Schönefeld ✈
BWM	1/2	1	1	Oranienburg
		2	1	Wannsee
BWOK	3/4	3	1	Oranienburg
			25	Hennigsdorf
		4	1	Wannsee
			25	Teltow Stadt
BWRS	A	1	3	Erkner
			7	Ahrensfelde
			9	Schönefeld ✈
		2	5	Mahlsdorf
	B	3	3	Ostbahnhof
			5	Ostbahnhof
		4	7	Potsdam Hbf
			9	Spandau
BWSS	A	1	7	Potsdam Hbf
		2	1	**Ankunft**
	B	3	1	**Oranienburg**
		4	7	Ahrensfelde
BWT	11/1	11	5	Ostbahnhof
		1	U5	Alexanderplatz
	12/2	2	U5	Hönow
		12	5	Mahlsdorf
BYOR	1/2	1	2	Blankenfelde
			25	Teltow Stadt
		2	2	Bernau
			25	Hennigsdorf
BZD	1/2	1	1	Wannsee
		2	1	Oranienburg
BZEP	4/6	4	2	Bernau
		6	2	Blankenfelde
BZOS	5/6	5	7	Ahrensfelde
			9	Schönefeld ✈
		6	7	Potsdam Hbf
			9	Spandau
BZTH	3/4	3	46	Königs Wusterhausen
		4	46	Südkreuz

A	1/2	1	2	Ruhleben
		2	2	Pankow
Ad	1/2	1	7	Rudow
		2	7	Rathaus Spandau
Afr	1/2	1	6	Alt-Mariendorf
		2	6	Alt-Tegel
Al	1/3	1	5	**Ankunft**
			5	**Hönow**
		3		kein Zugverkehr
	2/4	2	5	**Ankunft**
			5	**Hönow**
		4		kein Zugverkehr
Am	1/2	1	9	Rathaus Steglitz
		2	9	Osloer Straße
Ap	1/2	1	8	Hermannstraße
		2	8	Wittenau
AS	1/2	1	7	Rudow
		2	7	Rathaus Spandau
At	1/2	1	6	Alt-Mariendorf
		2	6	Alt-Tegel
Au	1	1	3	Krumme Lanke
	2	2	3	Warschauer Straße
B	1/2	1	8	Hermannstraße
		2	8	Wittenau
Beo	1	1	9	Rathaus Steglitz
	2	2	9	Osloer Straße
Beu	1/2	1	7	Rudow
		2	7	Rathaus Spandau
Bi	1/2	1	9	Rathaus Steglitz
		2	9	Osloer Straße
Bk	1/2	1	6	Alt-Mariendorf
		2	6	Alt-Tegel
Bl	1/2	1	7	Rudow
		2	7	Rathaus Spandau
Bli	1/2	1	7	Rudow
		2	7	Rathaus Spandau
Bmo	1	1	2	Ruhleben
	2	2	2	Pankow
Bmu	1/2	1	7	Rudow
		2	7	Rathaus Spandau
Bo	1/2	1	8	Hermannstraße
		2	8	Wittenau
Bpo	1/2	1	4	Innsbrucker Platz
		2	4	Nollendorfplatz
Bpu	1/2	1	7	Rudow
		2	7	Rathaus Spandau
Br	1/2	1	7	Rudow
		2	7	Rathaus Spandau
BRT	1/2	1	55	**Ankunft**
			55	**Hauptbahnhof**
		2		kein Zugverkehr
Bs	1	1	2	Ruhleben
	2	2	2	Pankow
Bt	1/2	1	3	Krumme Lanke
		2	3	Warschauer Straße
Bu	1	1	9	Rathaus Steglitz
	2	2	9	Osloer Straße
Bü	1	1	5	Alexanderplatz
	2/3	2	5	Hönow
		3	5	**Alexanderplatz**
BUN	1/2	1	55	Brandenburger Tor
			55	Hauptbahnhof
		2		kein Zugverkehr
C	1/2	1	5	Alexanderplatz
		2	5	Hönow
Dd	1/2	1	3	Krumme Lanke
		2	3	Warschauer Straße
E	1/2	1	5	Alexanderplatz
		2	5	Hönow
EB	1/2	1	2	Ruhleben
		2	2	Pankow
Ei	1/2	1	7	Rudow
		2	7	Rathaus Spandau
F	1/2	1	6	Alt-Mariendorf
		2	6	Alt-Tegel
Ff	1/2	1	5	Alexanderplatz
		2	5	Hönow

Fi	1/2	1	5	Alexanderplatz
		2	5	Hönow
FN	1/2	1	8	Hermannstraße
		2	8	Wittenau
Fpo	1/2	1	3	Krumme Lanke
		2	3	Warschauer Straße
Fpu	1/2	1	7	Rudow
		2	7	Rathaus Spandau
Fr	1/2	1	6	Alt-Mariendorf
		2	6	Alt-Tegel
Ft	1/2	1	5	Alexanderplatz
		2	5	Hönow
Fw	1/2	1	9	Rathaus Steglitz
		2	9	Osloer Straße
Gb	1/2	1	8	Hermannstraße
		2	8	Wittenau
GK	1/2	1	5	Alexanderplatz
		2	5	Hönow
Go	1/2	1	1	Uhlandstraße
			3	Krumme Lanke
		2	1	Warschauer Straße
			3	Warschauer Straße
Gr	1	1	1	Uhlandstraße
			3	Krumme Lanke
	2	2	1	Warschauer Straße
			3	Warschauer Straße
Gs	1/2	1	7	Rudow
		2	7	Rathaus Spandau
Gt	1/2	1	9	Rathaus Steglitz
		2	9	Osloer Straße
Gu	1/2	1	2	Ruhleben
		2	2	Pankow
Gz	1/2	1	7	Rudow
		2	7	Rathaus Spandau
Ha	1/2	1	9	Rathaus Steglitz
		2	9	Osloer Straße
Hb	1/2	1	3	Krumme Lanke
		2	3	Warschauer Straße
HBF	1/2	1	55	**Ankunft**
			55	**Brandenburger Tor**
		2		kein Zugverkehr
Hd	1/2	1	5	Alexanderplatz
		2	5	Hönow
He	1/2	1	8	Hermannstraße
		2	8	Wittenau
Hh	1/2	1	6	Alt-Mariendorf
		2	6	Alt-Tegel
Hl	1/2	1	7	Rudow
		2	7	Rathaus Spandau
HMS	1/2	1	8	**Ankunft**
			8	**Wittenau**
		2	8	**Ankunft**
			8	**Wittenau**
Ho	1	1	1	Uhlandstraße
			3	Krumme Lanke
	2	2	1	Warschauer Straße
			3	Warschauer Straße
Hö	1/2	1	5	**Ankunft**
			5	**Alexanderplatz**
		2	5	**Ankunft**
			5	**Alexanderplatz**
	3	3	5	kein Zugverkehr
Hpo	1/2	1	8	Hermannstraße
		2	8	Wittenau
Hpu	1/2	1	7	Rudow
		2	7	Rathaus Spandau
Hs	1/2	1	7	Rudow
		2	7	Rathaus Spandau
Hu	1/2	1	6	Alt-Mariendorf
		2	6	Alt-Tegel
Hv	1/2	1	2	Ruhleben
		2	2	Pankow
Hz	1/2	1	3	Krumme Lanke
		2	3	Warschauer Straße
Ip	1/2	1	4	**Ankunft**
			4	**Nollendorfplatz**
		2	4	**Ankunft**
			4	**Nollendorfplatz**

Jho	1/3	1	7	Rudow
		3		kein Zugverkehr
Jhu	2/4	2	7	Rathaus Spandau
		4		kein Zugverkehr
JK	1/2	1	7	Rudow
		2	7	Rathaus Spandau
Jn	1/2	1	8	Hermannstraße
		2	8	Wittenau
Jt	1/2	1	7	Rudow
		2	7	Rathaus Spandau
K	1/2	1	3	**Ankunft**
			3	**Warschauer Straße**
		2	3	**Ankunft**
			3	**Warschauer Straße**
Ka	1/2	1	6	Alt-Mariendorf
		2	6	Alt-Tegel
KB	1/2	1	8	Hermannstraße
		2	8	Wittenau
Kbo	1/2	1	1	Uhlandstraße
			3	Krumme Lanke
		2	1	Warschauer Straße
			3	Warschauer Straße
Kbu	1/2	1	8	Hermannstraße
		2	8	Wittenau
Kd	1	1	2	Ruhleben
	2	2	2	Pankow
Kfo	1	1	1	Uhlandstraße
	2	2	1	Warschauer Straße
Kfu	1/2	1	9	Rathaus Steglitz
		2	9	Osloer Straße
KL	1/2	1	5	Alexanderplatz
		2	5	Hönow
KM	1/2	1	7	Rudow
		2	7	Rathaus Spandau
Kn	1/2	1	7	Rudow
		2	7	Rathaus Spandau
Ko	1/2	1	2	Ruhleben
		2	2	Pankow
Ks	1/2	1	6	Alt-Mariendorf
		2	6	Alt-Tegel
Kt	1/2	1	7	Rudow
		2	7	Rathaus Spandau
Kus	1/2	1	1	Uhlandstraße
			3	Krumme Lanke
		2	1	Warschauer Straße
			3	Warschauer Straße
L	1/2	1	8	Hermannstraße
		2	8	Wittenau
La	1/2	1	7	Rudow
		2	7	Rathaus Spandau
LD	1	1	8	Hermannstraße
	2	2	8	Wittenau
Li	1/2	1	5	Alexanderplatz
		2	5	Hönow
LL	1/2	1	5	Alexanderplatz
		2	5	Hönow
Lpo	1	1	6	Alt-Mariendorf
	2	2	6	Alt-Tegel
Lpu	1/2	1	9	Rathaus Steglitz
		2	9	Osloer Straße
Lu	1/2	1	2	Ruhleben
		2	2	Pankow
MB	1	1	2	Ruhleben
	2	2	2	Pankow
Md	1/2	1	5	Alexanderplatz
		2	5	Hönow
Me	1/3	1	6	Alt-Mariendorf
		3	7	Rudow
	2/4	2	6	Alt-Tegel
		4	7	Rathaus Spandau
Mf	1/2	1	6	**Ankunft**
			6	**Alt-Tegel**
		2	6	**Ankunft**
			6	**Alt-Tegel**
MH	1/2	1	2	Ruhleben
		2	2	Pankow
Mi	1/2	1	2	Ruhleben
		2	2	Pankow
Mic	1/2	1	6	Alt-Mariendorf
		2	6	Alt-Tegel

Mk	1/2	1	2	Ruhleben
		2	2	Pankow
Mo	1	1	1	Uhlandstraße
			3	Krumme Lanke
	2	2	1	Warschauer Straße
			3	Warschauer Straße
Mp	1/2	1	7	Rudow
		2	7	Rathaus Spandau
Mr	1/2	1	8	Hermannstraße
		2	8	Wittenau
Mu	1/2	1	7	Rudow
		2	7	Rathaus Spandau
NA	1/2	1	6	Alt-Mariendorf
		2	6	Alt-Tegel
Nd	1/2	1	2	Ruhleben
		2	2	Pankow
Nk	1/2	1	7	Rudow
		2	7	Rathaus Spandau
Nm	2/4	2	1	Warschauer Straße
			3	Warschauer Straße
			3	**Ankunft**
		4	4	**Ankunft**
			4	**Innsbrucker Platz**
No	1	1	2	Ruhleben
	2	2	2	Pankow
Np	1/2	1	9	Rathaus Steglitz
		2	9	Osloer Straße
Nu	1/3	1	1	Uhlandstraße
			3	Krumme Lanke
		3	3	**Krumme Lanke**
Ob	1/2	1	6	Alt-Mariendorf
		2	6	Alt-Tegel
Obi	1/3	1	2	Ruhleben
		3		kein Zugverkehr
	2/4	2	2	Pankow
		4		kein Zugverkehr
Olo	1/2	1	9	**Rathaus Steglitz**
		2	9	**Ankunft**
Olu	1/2	1	8	Hermannstraße
		2	8	Wittenau
Os	1/2	1	3	Krumme Lanke
		2	3	Warschauer Straße
Ot	1/2	1	3	Krumme Lanke
		2	3	Warschauer Straße
OTI	1/2	1	6	Alt-Mariendorf
		2	6	Alt-Tegel
P	1/2	1	7	Rudow
		2	7	Rathaus Spandau
PA	1/2	1	2	**Ruhleben**
		2	2	**Ankunft**
PB	1/2	1	8	Hermannstraße
		2	8	Wittenau
Pd	1/2	1	2	Ruhleben
		2	2	Pankow
Pi	1/2	1	7	Rudow
		2	7	Rathaus Spandau
Pk	1/2	1	8	Hermannstraße
		2	8	Wittenau
PL	1/2	1	6	Alt-Mariendorf
		2	6	Alt-Tegel
Po	1/2	1	3	Krumme Lanke
		2	3	Warschauer Straße
Pr	1	1	1	Uhlandstraße
			3	Krumme Lanke
	2	2	1	Warschauer Straße
			3	Warschauer Straße
Ps	1/2	1	6	Alt-Mariendorf
		2	6	Alt-Tegel
R	1/2	1	7	**Ankunft**
		2	7	**Rathaus Spandau**
Rb	1/2	1	6	Alt-Mariendorf
		2	6	Alt-Tegel
Rd	1/2	1	3	Krumme Lanke
		2	3	Warschauer Straße
RE	1/2	1	8	Hermannstraße
		2	8	Wittenau
Ri	1/2	1	6	Alt-Mariendorf
		2	6	Alt-Tegel
Rk	1/2	1	7	Rudow
		2	7	Rathaus Spandau

Rl	1/2	1	2	**Ankunft**
		2	2	**Pankow**
		2	2	**Ankunft**
		2	2	**Pankow**
Rm	1/2	1	7	Rudow
		2	7	Rathaus Spandau
Ro	1/2	1	8	Hermannstraße
		2	8	Wittenau
RP	1	1	2	Ruhleben
	2	2	2	Pankow
RR	1/2	1	8	Hermannstraße
		2	8	Wittenau
RS	1/2	1	4	Innsbrucker Platz
		2	4	Nollendorfplatz
RSp	1/3	1	7	**Rudow**
		3		kein Zugverkehr
	2/4	2	7	**Ankunft**
		4		kein Zugverkehr
Rw	1/2	1	7	Rudow
		2	7	Rathaus Spandau
Rzu	1/2	1	9	**Ankunft**
		2	9	**Osloer Straße**
S	1	1	1	Uhlandstraße
			3	Krumme Lanke
	2	2	1	Warschauer Straße
			3	Warschauer Straße
Sa	1/2	1	5	Alexanderplatz
		2	5	Hönow
Sch	1/2	1	6	Alt-Mariendorf
		2	6	Alt-Tegel
Scha	1/2	1	6	Alt-Mariendorf
		2	6	Alt-Tegel
Sd	1/3	1	2	Ruhleben
		3	2	**Ankunft**
			2	**Pankow**
	2	2	2	Pankow
Se	1/3	1	6	Alt-Mariendorf
		3	6	**Ankunft**
			6	**Alt-Mariendorf**
	2	2	6	Alt-Tegel
Sh	1/2	1	2	Ruhleben
		2	2	Pankow
Si	1/2	1	5	Alexanderplatz
		2	5	Hönow
Sie	1/2	1	7	Rudow
		2	7	Rathaus Spandau
SK	1/2	1	6	Alt-Mariendorf
		2	6	Alt-Tegel
Slo	2/4	2	9	Osloer Straße
		4		kein Zugverkehr
Slu	1/3	1	9	Rathaus Steglitz
		3		kein Zugverkehr
Sno	1	1	3	Krumme Lanke
	2	2	3	Warschauer Straße
Snu	1/2	1	9	Rathaus Steglitz
		2	9	Osloer Straße
So	1	1	2	Ruhleben
	2	2	2	Pankow
Sp	1/2	1	2	Ruhleben
		2	2	Pankow
Sr	1/2	1	5	Alexanderplatz
		2	5	Hönow
ST	1/2	1	8	Hermannstraße
		2	8	Wittenau
Sü	1/2	1	7	Rudow
		2	7	Rathaus Spandau
Sz	1/2	1	2	Ruhleben
		2	2	Pankow
T	1/2	1	3	Krumme Lanke
		2	3	Warschauer Straße
Tg	1/2	1	6	**Ankunft**
			6	**Alt-Mariendorf**
		2	6	**Ankunft**
			6	**Alt-Mariendorf**
Th	1	1	2	Ruhleben
			2	**Ankunft**
	2	2	2	**Pankow**
			2	Pankow
Tk	1/2	1	5	Alexanderplatz
		2	5	Hönow

Tm	1/2	1	9	Rathaus Steglitz
		2	9	Osloer Straße
Ts	1/2	1	6	Alt-Mariendorf
		2	6	Alt-Tegel
U	1/2	1	1	**Ankunft**
		2	1	**Warschauer Straße**
Ull	1/2	1	6	Alt-Mariendorf
		2	6	Alt-Tegel
V	1/2	1	4	Innsbrucker Platz
		2	4	Nollendorfplatz
VIN	1/2	1	2	Ruhleben
		2	2	Pankow
Vo	1/2	1	8	Hermannstraße
		2	8	Wittenau
W	1/2	1	8	Hermannstraße
		2	8	Wittenau
WA	1/2	1	1	**Ankunft**
			1	**Uhlandstraße**
			3	**Ankunft**
			3	**Krumme Lanke**
		2	1	**Ankunft**
			1	**Uhlandstraße**
			3	**Ankunft**
			3	**Krumme Lanke**
	3	3	1	bei Veranstaltungen
Wd	1/2	1	7	Rudow
		2	7	Rathaus Spandau
We	1/2	1	6	Alt-Mariendorf
		2	6	Alt-Tegel
WF	1/2	1	9	Rathaus Steglitz
		2	9	Osloer Straße
Wh	11/1	11	S5	Westkreuz
		1	5	Alexanderplatz
	12/2	2	5	Hönow
		12	S5	Strausberg Nord
WIU	1/2	1	8	**Hermannstraße**
		2	8	**Ankunft**
Wk	1/2	1	7	Rudow
		2	7	Rathaus Spandau
Wl	1/2	1	6	Alt-Mariendorf
		2	6	Alt-Tegel
WR	1/2	1	5	Alexanderplatz
		2	5	Hönow
Wsg	1/2	1	9	Rathaus Steglitz
		2	9	Osloer Straße
Wt	I	1	1	Uhlandstraße
			3	Krumme Lanke
		3	2	Ruhleben
	II	2	2	Pankow
		4	3	Warschauer Straße
	III	6	1	Warschauer Straße
Y	1/2	1	7	Rudow
		2	7	Rathaus Spandau
Zd	1/2	1	7	Rudow
		2	7	Rathaus Spandau
Zi	1	1	7	Rudow
	2	2	7	Rathaus Spandau
Zo	1	1	2	Ruhleben
	2	2	2	Pankow
Zu	1/2	1	9	Rathaus Steglitz
		2	9	Osloer Straße

Bahnhof	Kürzel DB	Kürzel S	Kürzel U	Tagesverkehr	Nachtverkehr Fr/Sa + Sa/So	Nachtverkehr sonstige
Adenauerplatz			Ad	U7 M19 M29 X10 109 110	U7 M19 M29 N10	N7 M19 M29 N10
Adlershof		BADL		S45 S46 S8 S85 S9 61 63 162 163 164 260	S46 S8 S9 N60 N65 N68	N60 N65 N68
Afrikanische Straße			Afr	U6 221	U6	N6
Ahrensfelde	BAHR	BAF		RB25 S7 197 390 901	S7 N97	N97
Albrechtshof	BAS			RB10 RB14 237		
Alexanderplatz	BALE	BALX	A, Al, Ap	RE1 RE2 RE7 RB14 S3 S5 S7 S9 U2 U5 U8 M2 M4 M5 M6 M48 TXL 100 200 248	S7 S9 U2 U5 U8 M2 M4 M5 M48 N42 N65	N2 N5 M2 M4 M5 M48 N42 N65
Altstadt Spandau			AS	U7 X33	U7	N7
Alt-Mariendorf			Mf	U6 M76 M77 X76 179 181 277	U6 M76 M77 N79	N6 M76 M77 N79
Alt-Reinickendorf		BARF	⇒ PB	S25 ⇒ U8 120 122 320 322	S25 ⇒ U8 N20	⇒ N8 N20
Alt-Tegel		⇒ BTG	Tg	U6 124 125 133 220 222 ⇒ S25	U6 N22 N24 N25 N33 ⇒ S25	N6 N22 N24 N25 N33
Alt-Tempelhof			At	U6 M46 140 184 246	U6 M46 N84	N6 M46 N84
Altglienicke		BAGL		S45 S9 160	S9	
Amrumer Straße			Am	U9 142 221	U9	N9
Anhalter Bahnhof		BAHU		S1 S2 S25 S26 M29 M41	S1 S2 S25 M29 M41	M29 M41
Attilastraße		BATS		S2 184 282	S2 N84	N84
Augsburger Straße			Au	U3	U3	
Babelsberg		BBAB		S7 94 99 601 602 616 618 619 690 693 750	S7 N14 N17 N43	N14 N17 N43
Baumschulenweg		BBMW		S45 S46 S47 S8 S85 S9 170 265	S46 S8 S9 N70	N70
Bayerischer Platz			Bpo, Bpu	U4 U7 ⇒ M46	U7 ⇒ M46	N7 ⇒ M46
Bellevue		BBEV		S3 S5 S7 S9	S7 S9	
Bergfelde		BBFE		S8 809		
Berliner Straße			Beo, Beu	U7 U9 104	U7 U9 N42	N7 N9 N42
Bernau	BBRN	BBER		RE3 RB24 S2 868 869 890 891 892 894 895 896 898 899 901 903 907 908 909	S2	
Bernau-Friedenstal		BBRF		S2	S2	
Bernauer Straße			B	U8 M10 247	U8 M10 N40	N8 M10 N40
Betriebsbahnhof Rummelsburg		BRB		S3	S3	
Betriebsbahnhof Schöneweide		BSCF		S45 S46 S8 S85 S9	S46 S8 S9	
Beusselstraße		BBEU		S41 S42 TXL 106 123	S41 S42 N26	N26
Biesdorf		BBDF		S5 192	S5	
Biesdorf-Süd			Bü	U5	U5	
Birkenstein		BBIS		S5 941	S5	
Birkenstraße			Bi	U9 ⇒ M27	U9 ⇒ M27	N9 ⇒ M27
Birkenwerder	BBI	BBIW		RB20 S1 S8	S1	
Bismarckstraße			Bmo, Bmu	U2 U7 ⇒ 109	U2 U7	N2 N7
Blankenburg		BBLB		S2 S8 150 154	S2	
Blankenfelde	BBF	BBFD		RE3 RE7 S2 704 713 720 792 793 794 797	S2	
Blaschkoallee			Bl	U7 170 ⇒ 171	U7	⇒ N7
Blissestraße			Bli	U7 101 104 249 310	U7 N42	N7 N42
Boddinstraße			Bo	U8 104 166	U8	N8
Borgsdorf		BBOR		S1 816	S1	
Bornholmer Straße		BBOS		S1 S2 S25 S26 S8 S85 M13 50	S1 S2 S25 S8 M13	M13
Borsigwerke			Bk	U6 133	U6	N6
Botanischer Garten		BBGT		S1 188 ⇒ M48	S1 N88 ⇒ M48	N88 ⇒ M48
Brandenburger Tor		BTOR	BRT	S1 S2 S25 S26 U55 TXL 100 ⇒ 200	S1 S2 S25	⇒ N2
Breitenbachplatz			Bt	U3 101 248 282	U3	N3
Britz-Süd			Br	U7 M46 181	U7 M46	M46 ⇒ N7
Buch		BBU		S2 150 158 259 353 893	S2 N58	N58
Buckower Chaussee		BBCH		S2 M11 X11 277 710 711	S2 M11	M11
Bülowstraße			Bs ⇒ Kus	U2 M19 M48 M85 106 187 ⇒ U1 U3	U2 M19 M48 ⇒ U1	N1 N2 M19 M48
Bundesplatz		BBUP	Bu	S41 S42 S46 U9 248	S41 S42 U9	N9
Charlottenburg	BCHB	BCHS	⇒ Wd	RE1 RE7 RB14 RB21 RB22 S3 S5 S7 S9 X49 109 309 310 ⇒ U7 M49 X34	S7 S9 ⇒ U7 M49	N7 ⇒ M49
Cottbusser Platz			C	U5 195	U5	N5
Dahlem-Dorf			Dd	U3 M11 X83 ⇒ 110	U3 M11 ⇒ N10	N3 M11 ⇒ N10
Deutsche Oper			Obi	U2 ⇒ 101	U2	N2
Eberswalder Straße			EB	U2 M1 M10 12	U2 M1 M10	N2 M1 M10
Eichborndamm		BEBD		S25 221 322	S25	
Eichwalde		BEIW		S46 S8 731	S46	
Eisenacher Straße			Ei	U7 ⇒ M46	U7 ⇒ M46	N7 ⇒ M46
Elsterwerdaer Platz			E	U5 69 108 154 169 190 398	U5 69	69
Erkner	BERK	BE		RE1 S8 161 420 428 436 950	S8	
Ernst-Reuter-Platz			RP	U2 M45 X9 245	U2 M45	N2 M45
Fehrbelliner Platz			Fpo, Fpu	U3 U7 101 104 115	U3 U7 N42	N3 N7 N42
Feuerbachstraße		BFB		S1 M76 X76 181	S1 M76 N81	M76 N81
Flughafen Schönefeld ✈	BFHS	BFLH		RE7 RB14 RB22 S45 S9 163 164 171 735 736 741	S9 N7 N60	N7 N60
Frankfurter Allee		BFA	Ff	S41 S42 S8 S85 U5 M13 16	S41 S42 S8 U5 M13	N5 M13
Frankfurter Tor			Ft	U5 M10 21	U5 M10	N5 M10
Franz-Neumann-Platz (Am Schäfersee)			FN	U8 128 250 327	U8	N8
Französische Straße			Fr	U6 147	U6	
Fredersdorf		BFD		S5 933 948 949 951	S5	
Freie Universität (Thielplatz)			T	U3 110	U3	N3
Friedenau		BFRU		S1 187	S1	
Friedrichsfelde			Fi	U5 194 296 396	U5 N50	N50
Friedrichsfelde Ost		BFFO		S5 S7 S75 M17 27 37 192 194	S5 S7 S75 M17	M17
Friedrichshagen		BFRH		S3 60 61 88	S3 N67	N67
Friedrichstraße	BFRI	BFST, BFSTT	F	RE1 RE2 RE7 RB14 RB21 RB22 S1 S2 S25 S26 U6 M1 12 147	S1 S2 S25 U6 M1	N6 M1
Friedrich-Wilhelm-Platz			Fw	U9 186 246	U9	N9
Frohnau		BFOH		S1 125 220	S1 N20	N20
Gehrenseestraße		BGSE		S75 294	S75 N56	N56
Gesundbrunnen	BGS	BGB	Gb	DB RE3 RE5 RE6 S1 S2 S25 S26 S41 S42 U8 247	S1 S2 S25 S41 S42 U8	N8
Gleisdreieck			Go, Gu	U1 U2 U3	U1 U2	
Gneisenaustraße			Gs	U7 140 248	U7	N7
Görlitzer Bahnhof			Gr	U1 U3 M29	U1 M29	N1 M29
Greifswalder Straße		BGSS		S41 S42 S8 S85 M4	S41 S42 S8 M4	M4
Grenzallee			Gz	U7 171	U7	N7

Bahnhof	Kürzel DB	Kürzel S	Kürzel U	Tagesverkehr	Nachtverkehr Fr/Sa + Sa/So	Nachtverkehr sonstige
Griebnitzsee	BGBS	BGRI		RB21 RB22 S7 694 696	S7	
Grünau		BGAS		S46 S8 S85 68 163 263 363	S46 S8 N62 N68	N62 N68
Grünbergallee		BGBA		S46 S9 ⇒ 160	S9	
Grunewald		BGWD		S7 M19 186 349	S7	
Güntzelstraße			Gt	U9	U9	N9
Hackescher Markt		BHKM		S8 S5 S7 S9 M1 M4 M5 M6	S7 S9 M1 M4 M5 N40 N42 N65	N2 N5 N8 N40 N42 N65
Halemweg			Hl	U7 123	U7	⇒ N7
Halensee		BHAL		S41 S42 S46 M19 M29 X10 104	S41 S42 M19 M29 N42	M19 M29 N42
Hallesches Tor			Ho, Hu	U1 U3 U6 M41 248	U1 U6 M41 N42	N1 N42 ⇒ N6
Hansaplatz			Ha	U9 106	U9 N26	N26
Haselhorst			Hs	U7 X33 X36 133 236	U7 N33	N7 N33
Hauptbahnhof	BLS, BL	BHBF	HBF	RB11 RE2 RE5 RE4 RE6 RE7 RB10 RB14 RB21 RB22 S3 S5 S7 S9 U55 M5 M8 M10 M41 M85 TXL 120 123 142 147 245	S7 S9 M10 M41 N20 N40	M10 M41 N20 N40
Hausvogteiplatz			Hv	U2 ⇒ M48 147 265	U2 ⇒ M48	⇒ M48
Heerstraße		BHST		S3 S9 M49 X34 X49 218 349	S9 M49	M49
Hegermühle		BHGM		S5 ⇒ 89 885 923 927	S5	
Heidelberger Platz		BHEI	Hb	S41 S42 S46 U3 249 310	S41 S42 U3	N3
Heiligensee		BHLS		S25 124	S25 N24	N24
Heinrich-Heine-Straße			He	U8 165 265	U8 N65	N8 N65
Hellersdorf			Hd	U5 M6 18 X54 195	U5 M6	N5 M6
Hennigsdorf	BHND	BHD		RE6 RB20 RB55 S25 136 809 824	S25	
Hermannplatz			Hpo, Hpu	U7 U8 M29 M41 171 194	U7 U8 M29 M41 N94	N7 N8 M29 M41 N94
Hermannstraße		BHER	HMS	S41 S42 S45 S46 S47 U8 M44 246 277 370 377	S41 S42 S46 U8 M44 N79	N8 M44 N79
Hermsdorf		BHED		S1 107 326 809	S1 N25	N25
Hirschgarten		BHI		S3 ⇒ 60	S3 ⇒ N60	⇒ N60
Hohen Neuendorf		BHN		S1 S8 809 823	S1	
Hohenschönhausen	BHSH	BHH		RB12 RB24 S75 M4 M17 X54 154 197 256 893	S75 M4	M4
Hohenzollerndamm		BHO		S41 S42 S46 115	S41 S42 N10	N3 N10
Hohenzollernplatz			Hz	U3 249	U3	N3
Holzhauser Straße			Hh	U6 X33 133	U6 N33	N6 N33
Hönow			Hö	U5 395 941 943	U5	N5
Hoppegarten		BHPN		S5 940 942 943 945	S5	
Humboldthain		BHUM		S1 S2 S25 S26 247 ⇒ M27	S1 S2 S25 ⇒ M27	⇒ M27
Innsbrucker Platz (Hauptstraße)		BIP	Ip	S41 S42 S46 U4 M48 M85 187 248	S41 S42 M48	M48
Jakob-Kaiser-Platz			JK	U7 M21 9 21 109 123	U7 M21	N7 M21
Jannowitzbrücke		BJB	Jn	S3 S5 S7 S9 U8 248	S7 S9 U8 N40 N65	N8 N40 N65
Johannisthaler Chaussee (Gropiusstadt)			Jt	U7 M11 X11 172 744	U7 M11	N7 M11
Julius-Leber-Brücke		BJLB		S1 104 106 204 ⇒ M48 M85 187	S1 N42 ⇒ M48	N42 ⇒ M48
Jungfernheide	BJUF	BJUN	Jho, Jhu	RE4 RE6 RB10 RB13 S41 S42 U7 M21 M27 X9 109	U7 M21 M27	N7 M21 M27
Kaiserdamm			Kd	S41 S42 S46 U2 139	S41 S42 U2	N2
Kaiserin-Augusta-Straße			Ka	U6 184	U6	N6
Karl-Bonhoeffer-Nervenklinik		BKBO	KB	S25 U8 M21 X21	S25 U8 M21	N8 M21
Karl-Marx-Straße			KM	U7	U7	N7
Karlshorst	BKH	BKLH		S3 M17 27 37 297 397	S3 M17	M17
Karow	BKAR	BKRW		RB27 S2 350	S2	
Kaulsdorf		BKAD		S5 197 269 399	S5 N95	N95
Kaulsdorf-Nord			KL	U5 191 197 269 291	U5 N91	N5 N91
Kienberg (Gärten der Welt)			GK	U5 197	U5	N5
Kleistpark			Kt	U7 M48 M85 106 187 204	U7 M48	N7 M48
Klosterstraße			Ko	U2 ⇒ M48 248	U2 ⇒ M48 N40 N42	⇒ N8 M48 N40 N42
Kochstraße (Checkpoint Charlie)			Ks	U6 M29	U6 M29	N6 M29
Köllnische Heide		BKHD		S45 S46 S47 M41 341 ⇒ 377	S46 M41 ⇒ N79	M41 ⇒ N79
Königs Wusterhausen	BKW	BKW		RE2 RB22 RB24 S46 721 722 723 724 725 726 727 728 729 730 733 737 739 740 743	S46	
Konstanzer Straße			Kn	U7 101	U7	N7
Köpenick		BKPK		S3 62 63 68 X69 164 169 269	S3 N69 N90	N69 N90
Kottbusser Tor			Kbo, Kbu	U1 U3 U8 140	U1 U8	N1 N8
Krumme Lanke			K	U3 X11 118 622 ⇒ S1	U3 ⇒ S1	N3
Kurfürstendamm			Kfo, Kfu	U1 U9 M19 M29 M46 X10 109 110 204 249	U1 U9 M19 M29 M46 N10 N26	N1 N2 N3 N9 M19 M29 M46 N10 N26
Kurfürstenstraße			Kus ⇒ Bs	U1 U3 M48 M85 ⇒ U2 M19	U1 M48 ⇒ U2 M19	N1 N2 M48 ⇒ M19
Kurt-Schumacher-Platz			Sch	U6 M21 X21 122 125 128 221	U6 M21	N6 M21
Landsberger Allee		BLST		S41 S42 S8 S85 M5 M6 M8	S41 S42 S8 M5 M6 M8	M5 M6 M8
Lankwitz		BLAK		S25 S26 M82 X83 181 187 283 284 ⇒ 184 284	S25 M82 N81 N84	M82 N81 N84
Lehnitz		BLEN		S1	S1	
Leinestraße			L	U8	U8	N8
Leopoldplatz			Lpo, Lpu	U6 U9 120 142 221 247 327	U6 U9 N20	N6 N9 N20
Lichtenberg	BLO	BLI	Li	RB3 RB12 RB24 RB25 RB26 S5 S7 S75 U5 21 37 108 240 256 296	S5 S7 S75 U5 N50 N94	N5 N50 N94
Lichtenrade		BLRD		S2 M76 172 175 275	S2 M76	M76
Lichterfelde Ost	BLIH	BLIO		RE3 RE4 RE5 S25 S26 M11 X11 184 284 ⇒ 380	S25 M11 N84	M11 N84
Lichterfelde Süd		BLIS		S25 S26 M85 186 284	S25 M85 N88	M85 N88
Lichterfelde West		BLWE		S1 M11 ⇒ M48 101 188	S1 M11 ⇒ M48 N88	M11 ⇒ M48 N88
Lindauer Allee			LD	U8 322 ⇒ M21	U8 ⇒ M21	N8 ⇒ M21
Lipschitzallee			La	U7 373 ⇒ M11 172	U7 ⇒ M11	⇒ M11
Louis-Lewin-Straße			LL	U5 195	U5	N5
Magdalenenstraße			Md	U5 240	U5 N50 N56 N94	N5 N50 N56 N94
Mahlow		BMAH		S2 600 794	S2	
Mahlsdorf	BMHL	BMDF		RB26 S5 62 195 197 395 398	S5 N90 N95	N90 N95
Marienfelde		BMF		S2 M77 283 ⇒ 277	S2 M77 N81	M77 N81
Märkisches Museum			Mk	U2 147 165 265 ⇒ U8 M48 248	U2 ⇒ U8 M48 N42 N65	⇒ N8 M48 N42 N65
Marzahn		BMAZ		S7 M6 16 X54 191 192 195 291	S7 M6	M6
Mehringdamm			Me	U6 U7 M19 140	U6 U7 M19 N42	N6 N7 M19 N42
Mehrower Allee		BMEA		S7 X69 197	S7	
Mendelssohn-Bartholdy-Park			MB	U2 M29	U2 M29	N1 M29
Messe Nord/ICC		BMN	⇒ Kd	S41 S42 S46 U2 M49 X34 X49 139 218	S41 S42 U2 M49	M49
Messe Süd		BMS		S3 S9 349	S9	
Mexikoplatz		BMEX	⇒ K	S1 118 622 ⇒ U3 X11	S1 ⇒ U3	N3

Bahnhof	Kürzel DB	Kürzel S	Kürzel U	Tagesverkehr	Nachtverkehr Fr/Sa + Sa/So	Nachtverkehr sonstige
Mierendorffplatz			Mp	U7 M27	U7 M27	N7 M27
Möckernbrücke			Mo, Mu	U1 U8 U7	U1 U7	N1
Mohrenstraße			MH	U2 200	U2	N2
Moritzplatz			Mr	U8 M29	U8 M29	N8 M29
Mühlenbeck-Mönchmühle		BMM		S8 806 810		
Naturkundemuseum			NA	U6 M5 M8 M10 12 142 245	U6 M10 N40	N6 M10 N40
Nauener Platz			Np	U9 247 327	U9	N9
Neu-Westend			Nd	U2 104 349	U2	N2
Neuenhagen		BNG		S5 940	S5	
Neukölln		BNK	Nk	S41 S42 S45 S46 S47 U7 171 370 377	S41 S42 S46 U7 N79	N7 N79
Nikolassee		BNIS, BNIW		S1 S7 112 312 ⇒ 218	S1 S7 N16	N16
Nöldnerplatz		BNPL		S5 S7 S75 194 240 396	S5 S7 N94	N94
Nollendorfplatz			Nm, No, Nu	U1 U2 U3 U4 M19 106 187	U1 U2 U3 M19 N26	N1 N2 M19 N26
Nordbahnhof		BNB		S1 S2 S25 S26 M8 M10 12 247	S1 S2 S25 M10 N40	M10 N40
Olympiastadion		BOLS	⇒ Sd	S3 S9 ⇒ U2 M49	S9 ⇒ U2 M49	⇒ M49
Olympia-Stadion		⇒ BOLS	Sd	U2	U2	
Onkel Toms Hütte			Ot	U3 118	U3	⇒ N3
Oranienburg	BOR	BORB		RE5 RB12 RB20 S1 800 802 804 805 821 824	S1	
Oranienburger Straße		BORS		S1 S2 S25 S26 M1 M5	S1 S2 S25 M1	M1
Oranienburger Tor			Ob	U6 M1 M5 12 142	U6 M1	N6 M1
Osdorfer Straße		BOSS		S25 S26 112 186	S25 N88	N88
Oskar-Helene-Heim			Os	U3 X10 110 115 285 623	U3 N10	N3 N10
Osloer Straße			Olo, Olu	U8 U9 M13 50 125 128 150 255	U8 U9 M13 N52	N8 N9 M13 N52
Ostbahnhof	BHF	BOSB		RE1 RB11 RB7 RB14 S3 S5 S7 S9 140 142 147 240 248 347	S5 S7 S9 N40	N40
Ostkreuz	BOKN, BOKR	BOK, BOKS		RE1 RE2 RE7 RB12 RB14 RB24 RB25 S3 S41 S42 S5 S7 S75 S8 S85 194 347	S3 S41 S42 S5 S7 S8 N94	N94
Otisstraße			OTI	U6 ⇒ 125	U6	⇒ N6
Pankow		BPKW	PA	S2 S8 S85 U2 M1 50 M27 107 155 250 255	S2 S8 U2 M1 M27 N50	N2 M1 M27 N50
Pankow-Heinersdorf		BPHD		S2 S8 50	S2 N50	N50
Pankstraße			Pk	U8 M27	U8 M27	N8 M27
Paracelsus-Bad		⇒ BARF	PB	U8 120 122 320 322 ⇒ S25	U8 N20 ⇒ S25	N8 N20
Paradestraße			Ps	U6	U6	N6
Parchimer Allee			Pi	U7 M46	U7 M46	M46
Paulsternstraße			P	U7 139	U7 N39	N7 N39
Petershagen Nord		BPEN		S5 931 938	S5	
Pichelsberg		BPIC		S3 S9 ⇒ M49 218	S9 ⇒ M49	⇒ M49
Plänterwald		BPWA		S8 S85 S9 165 166 377	S8 S9 N65 N79	N65 N79
Platz der Luftbrücke			PL	U6 104 248	U6 N42	N6 N42
Podbielskiallee			Po	U8	U8	
Poelchaustraße		BPOE		S7 291	S7	
Potsdam Hauptbahnhof	BPD	BPDH		RE1 RB20 RB21 RB22 RB23 S7 91 92 93 96 98 99 X1 X5 X15 580 601 603 604 605 606 607 608 611 614 619 631 638 643 650 690 691 694 695 715 750	S7 607 611 631 N13 N14 N15 N16 N17 N43	N13 N14 N16 N17
Potsdamer Platz	BPOF	BPOP	Pd	RE3 RE4 RE5 RE10 S1 S2 S25 S26 U2 M41 M48 M85 200	S1 S2 S25 U2 M41 M48	N2 M41 M48
Prenzlauer Allee		BPLA		S41 S42 S8 S85 M2 156	S41 S42 S8 M2	M2
Priesterweg		BPRS		S2 S25 S26 M76 X76 170 246	S2 S25 M76	M76
Prinzenstraße			Pr	U1 U3 140	U1	N1
Rahnsdorf		BRD		S3 87 161	S3 N61	N61
Raoul-Wallenberg-Straße		BRW		S7 X54 154	S7	
Rathaus Neukölln			Rk	U7 104 166	U7 N94	N7 N94
Rathaus Reinickendorf			RR	U8 33 220 221 322	U8	N8
Rathaus Schöneberg			RS	U4		
Rathaus Spandau	⇒ BSPD	⇒ BSPA	RSp	U7 M32 M37 M45 X33 X36 130 134 135 136 137 236 237 337 638 671 ⇒ RE2 RE4 RE6 RE10 RE13 RB14 S3 S9	U7 M32 M37 M45 N30 N34 ⇒ S9	N7 M32 M37 M45 N30 N34
Rathaus Steglitz		BRST	Rzu	S1 U9 M48 M82 M85 X83 170 186 188 282 283 284 285	S1 U9 M48 M82 M85 N88	N9 M48 M82 M85 N88
Rehberge			Rb	U6	U6	N6
Reinickendorfer Straße			Ri	U6 M27 120	U6 M27 N20	N6 M27 N20
Residenzstraße			RE	U8 122 125 327	U8	N8
Richard-Wagner-Platz			Rw	U7 M45	U7 M45	N7 M45
Rohrdamm			Rm	U7 123 139	U7 N23 N39	N7 N23 N39
Röntgental		BRGT		S2	S2	
Rosa-Luxemburg-Platz			Lu	U2 M8 142	U2	N2
Rosenthaler Platz			Ro	U8 M1 M8 142	U8 M1 N40	N8 M1 N40
Rüdesheimer Platz			Rd	U3 186	U3	N3
Rudow			R	U7 X7 162 171 172 260 271 371 372 373 744	U7 N7	N7
Ruhleben			Rl	U2 M45 130 131	U2 M45	N2 M45
Rummelsburg		BRH		S3 21 194 240	S3 N94	N94
Samariterstraße			Sa	U5	U5	N5
Savignyplatz		BSAP		S3 S5 S7 S9 ⇒ M49 X34	S7 S9 ⇒ M49	⇒ M49
Scharnweberstraße			Scha	U6 221	U6	N6
Schichauweg		BSC		S2 X83 175	S2	
Schillingstraße			Si	U5	U5	N5
Schlachtensee		BSLS		S1	S1	
Schlesisches Tor			S	U1 U3 165 265	U1 N65	N1 N65
Schloßstraße			Slo, Slu	U9 N48 N85 186 282	U9 M48	N9 M48
Schöneberg		BSGR, BSGV		S1 S41 S42 S46 M46 248	S1 S41 S42 M46	M46
Schöneweide	BSWP	BSW		RB24 S45 S46 S47 S8 S85 S9 M17 21 37 60 67 M11 X11 160 163 165 166 265	S46 S47 S8 S9 M17 M11 N65 N67	M17 M11 N65 N67
Schönfließ		BSNF		S8 ⇒ 809 810		
Schönhauser Allee		BSAL	Sh	S41 S42 S8 S85 U2 M1	S41 S42 S8 U2 M1	N2 M1
Schönholz		BSNH		S1 S25 S26 150 327 ⇒ 155	S1 S25 N52	N52
Schönleinstraße			ST	U8	U8	N8
Schulzendorf		BSZF		S25 124	S25 N24	N24
Schwartzkopffstraße			SK	U6	U6	N6
Seestraße			Se	U6 M13 50 106 120	U6 M13 N20 N26	U6 M13 N20 N26
Senefelderplatz			Sz	U2	U2	N2
Siemensdamm			Sie	U7 123 139	U7	N7

Bahnhof	Kürzel DB	Kürzel S	Kürzel U	Tagesverkehr	Nachtverkehr Fr/Sa + Sa/So	Nachtverkehr sonstige
Sonnenallee		BSO		S41 S42 M41 N79	S41 S42 M41 N79	M41 N79
Sophie-Charlotte-Platz			So	U2 309	U2	N2
Spandau	BSPD	BSPA	⇒ RSp	RE2 RE4 RE6 RB10 RB13 RB14 S3 S9 ⇒ U7 M32 M37 M45 X33 X36 130 134 135 136 137 236 237 337 638 671	S9 ⇒ U7 M32 M37 M45 N30 N34	⇒ N7 M32 M37 M45 N30 N34
Spichernstraße			Sno, Snu	U3 U9 204	U3 U9	N3 N9
Spindlersfeld		BSPF		S47 61 63 165	S47 N65	N65
Spittelmarkt			Sp	U2 M48 248 265	U2 M48	N2 M48
Springpfuhl		BSPH		S7 S75 M8 18 194	S7 S75 M8	M8
Staaken	BSTA			RE4 RB13 M32	M32	M32
Stadtmitte			Mi, Mic	U2 U6 M48 265	U2 U6 M48	N6 M48
Storkower Straße		BSTO		S41 S42 S8 S85 156 240 ⇒ 21	S41 S42 S8	
Strausberg	BST	BSTV		RB26 S5 S9 885 923 927 931 932 933 950	S5	
Strausberg Nord		BSTN		S5 885 927	S5	
Strausberg Stadt		BSTR		S5 885 923 927	S5	
Strausberger Platz			Sr	U5 142	U5	N5
Stresow		BSRW		S3 S9 130 ⇒ M45	S9 ⇒ M45	⇒ M45
Südende		BSDE		S25 S26 282	S25	
Südkreuz	BPAF	BSKR, BSKV		RE3 RE4 RE5 RB10 S2 S25 S26 S41 S42 S45 S46 M46 106 184 204 248	S2 S25 S41 S42 M46	M46
Südstern			Sü	U7	U7	N7
Sundgauer Straße		BSDG		S1 X11 ⇒ M48 101	S1 ⇒ M48	⇒ M48
Tegel		BTG	⇒ Tg	S25 133 ⇒ U6 124 125 220 222	S25 N25 ⇒ U6 N22 N24 N33	N25 ⇒ N22 N24 N33
Teltow Stadt		BTLS		S25 S26 X1 X10 600 601 620 621 625 626	S25 N13	N13
Tempelhof		BTHF	Ts	S41 S42 S45 S46 U6 140 184	S41 S42 S46 U6 N84	N6 N84
Theodor-Heuss-Platz			Th	U2 M49 X34 X49 104 218 349	U2 M49 N42	N2 M49 N42
Tiergarten		BTGN		S3 S5 S7 S9	S7 S9	N9
Tierpark			Tk	U5 M17 27 37 296	U5 M17 50	M17 50
Treptower Park		BTP		S41 S42 S3 S85 S9 104 165 166 194 265	S41 S42 S3 S9 N65 N94	N65 N94
Turmstraße			Tm	U9 M27 TXL 101 123 187 245	U9 M27 N40	N9 M27 N40
Uhlandstraße			U	U1 M19 M29 X10 109 110	U1 M19 M29 N10	M19 M29 N10
Ullsteinstraße			Ull	U6 170	U6	N6
Viktoria-Luise-Platz			V	U4 ⇒ M46	⇒ M46	⇒ M46
Vinetastraße			VIN	U2 M1 50 250	U2 M1	N2 M1
Voltastraße			Vo	U8 247	U8	N8
Waidmannslust		BWAI		S1 S26 222 322 ⇒ 122 220	S1 N22 ⇒ N20	N22 ⇒ N20
Walther-Schreiber-Platz			Wsg	U9 M48 M76 M85 X76 181 186	U9 M48 M76 N81	N9 M48 M76 N81
Wannsee	BWS	BWSS		RE1 RE7 RB21 RB22 RB33 S1 S7 114 118 218 316 318 620 F10	S1 S7 N16	N16
Warschauer Straße		BWRS	WA	S3 S5 S7 S9 U1 U3 M10 13 248 347	S5 S7 S9 U1 M10 13	N1 M10 13
Wartenberg		BWAB		S75 256 ⇒ M4 M5	S75 N56 ⇒ M5	N56 ⇒ M5
Weberwiese			WR	U5 347	U5	N5
Wedding		BWED	We	S41 S42 U6 M27 120 247	S41 S42 U6 M27 N20	N6 M27 N20
Weinmeisterstraße			W	U8 M1	U8 M1 N40 N42 N65	N2 N5 N8 M1 N40 N42 N65
Westend		BWES		S41 S42 S46 M45 ⇒ 139 309	S41 S42 M45	M45
Westhafen		BWF	WF	S41 S42 U9	S41 S42 U9	N9
Westkreuz		BWKRR, BWKS		S3 S41 S42 S46 S5 S7 S9 104	S41 S42 S7 S9 N42	N42
Westphalweg			Wl	U6 282	U6	N6
Wildau		BWI		S46 736 737	S46	
Wilhelmshagen		BWIG		S3 161	S3 N61	N61
Wilhelmsruh		BWM		S1 S26 122	S1	
Wilmersdorfer Straße	⇒ BCHB	⇒ BCHS	Wd	U7 X34 X49 309 310 ⇒ RE1 RE7 RB14 RB21 RB22 S3 S5 S7 S9	U7 M49 ⇒ S7 S9	M49
Wittenau		BWIN	WIU	S1 S26 U8 M21 X21 X33 120 122 124 220 221	S1 U8 M21 N20 N24	N8 M21 N20 N24
Wittenbergplatz			Wt	U1 U2 U3 M19 M29 M46	U1 U2 U3 M19 M29 M46	N1 N2 N3 M19 M29 M46
Wollankstraße		BWOK		S1 S25 S26 M27 250 255	S1 S25 M27	M27
Wuhletal		BWT	Wh	S5 U5 191 291	S5 U5 N69 N90 N91 N95	N5 N69 N90 N91 N95
Wuhlheide		BWHH		S3 190		
Wutzkyallee			Wk	U7 ⇒ M11	U7 ⇒ M11	⇒ N7 M11
Yorckstraße		BGGS, BYOR	Y	S1 S2 S25 S26 U7 M19	S1 S2 S25 U7 M19	N7 M19
Zehlendorf		BZD		S1 X10 101 112 115 285 623	S1 N10 N12 N84	N10 N12 N84
Zepernick		BZEP		S2 868 891 893	S2	
Zeuthen		BZTH		S46 S8 731 733 741	S46	
Zitadelle			Zi	U7 X33	U7	N7
Zoologischer Garten	BZOO	BZOS	Zo, Zu	RE1 RE2 RE7 RB14 RB21 RB22 S3 S5 S7 S9 U2 U9 M45 M46 M49 X9 X10 X34 100 109 110 200 204 245 249	S7 S9 U2 U9 M45 M46 M49 N10 N26	N1 N2 N9 M45 M46 M49 N10 N26
Zwickauer Damm			Zd	U7 373	U7	

Linie	Fahrtweg	Takt
M1	BPKW $\overset{3}{\leftrightarrow}$ VIN $\overset{4}{\leftrightarrow}$ BSAL $\overset{4}{\leftrightarrow}$ EB $\overset{5}{\leftrightarrow}$ Ro $\overset{2}{\leftrightarrow}$ BHKM $\overset{3}{\leftrightarrow}$ BORS $\overset{3}{\leftrightarrow}$ Ob $\overset{2}{\leftrightarrow}$ BFST	t: 7,5-10, f/a: 20, n: 30
M2	BPLA $\overset{12}{\leftrightarrow}$ BALX	t: 5-7, f/a: 10, n: 30
M4	BHH $\overset{18}{\leftrightarrow}$ BGSS $\overset{12}{\leftrightarrow}$ BALX $\overset{3}{\leftrightarrow}$ BHKM	t: 5-10, f/a: 20, n: 30
M5	BLST $\overset{13}{\leftrightarrow}$ BALX $\overset{3}{\leftrightarrow}$ BHKM $\overset{3}{\leftrightarrow}$ BORS $\overset{2}{\leftrightarrow}$ Ob $\overset{3}{\leftrightarrow}$ NA $\overset{5}{\leftrightarrow}$ BHBF	t: 5-20, f/a: 10-20, n: 30
M6	Hd $\overset{18}{\leftrightarrow}$ BMAZ $\overset{18}{\leftrightarrow}$ BLST $\overset{13}{\leftrightarrow}$ BALX $\overset{3}{\leftrightarrow}$ BHKM	t: 10, f/a: 15-20, n: 30
M8	BSPH $\overset{15}{\leftrightarrow}$ BLST $\overset{11}{\leftrightarrow}$ Lu $\overset{2}{\leftrightarrow}$ Ro $\overset{5}{\leftrightarrow}$ BNB $\overset{3}{\leftrightarrow}$ NA $\overset{4}{\leftrightarrow}$ BHBF	t: 5-10, f/a: 20, n: 30
M10	BHBF $\overset{5}{\leftrightarrow}$ NA $\overset{2}{\leftrightarrow}$ BNB $\overset{3}{\leftrightarrow}$ B $\overset{5}{\leftrightarrow}$ EB $\overset{16}{\leftrightarrow}$ Ft $\overset{5}{\leftrightarrow}$ BWRS	t: 5, f/a: 10-15, n: 30
M13	Se $\overset{5}{\leftrightarrow}$ Olo $\overset{5}{\leftrightarrow}$ BBOS $\overset{33}{\leftrightarrow}$ BFA $\overset{10}{\leftrightarrow}$ BWRS	t: 10, f/a: 20, n: 30
M17	BHH $\overset{18}{\leftrightarrow}$ BFFO $\overset{6}{\leftrightarrow}$ Tk $\overset{5}{\leftrightarrow}$ BKLH $\overset{11}{\leftrightarrow}$ BSW	t: 10, f/a: 20, n: 30
12	EB $\overset{8}{\leftrightarrow}$ BNB $\overset{3}{\leftrightarrow}$ NA $\overset{3}{\leftrightarrow}$ Ob $\overset{2}{\leftrightarrow}$ BFST	t: 10, f/a: 20
16	BMAZ $\overset{23}{\leftrightarrow}$ BFA	t: 10, f/a: 20, So: –
18	Hd $\overset{20}{\leftrightarrow}$ BSPH	H: 10, N: 20, So: –
21	BLI $\overset{22}{\leftrightarrow}$ Ft $\overset{9}{\leftrightarrow}$ BRH $\overset{19}{\leftrightarrow}$ BSW	t/f/a: 20
27	BFFO $\overset{6}{\leftrightarrow}$ Tk $\overset{5}{\leftrightarrow}$ BKLH	t/f/a: 20
37	BLI $\overset{11}{\leftrightarrow}$ BFFO $\overset{6}{\leftrightarrow}$ Tk $\overset{5}{\leftrightarrow}$ BKLH $\overset{11}{\leftrightarrow}$ BSW	t: 20, Sa/So: –

Linie	Fahrtweg	Takt
50	BPDH $\overset{7}{\leftrightarrow}$ BPKW $\overset{3}{\leftrightarrow}$ VIN $\overset{7}{\leftrightarrow}$ BBOS $\overset{5}{\leftrightarrow}$ Olo $\overset{5}{\leftrightarrow}$ Se	t: 10, f/a: 20
60	BSW $\overset{28}{\leftrightarrow}$ BFRH	t: 20
61	BADL $\overset{6}{\leftrightarrow}$ BSPF $\overset{24}{\leftrightarrow}$ BFRH	t: 20
62	BKPK $\overset{20}{\leftrightarrow}$ BMDF	t: 20
63	BADL $\overset{6}{\leftrightarrow}$ BSPF $\overset{13}{\leftrightarrow}$ BKPK	t: 20
68	BKPK $\overset{19}{\leftrightarrow}$ BGAS	t: 20
M11	Dd $\overset{7}{\leftrightarrow}$ BLWE $\overset{10}{\leftrightarrow}$ BLIO $\overset{15}{\leftrightarrow}$ BBCH $\overset{15}{\leftrightarrow}$ Jt $\overset{22}{\leftrightarrow}$ BSW	t: 10, f/a: 20, n: 30
M19	BGWD $\overset{9}{\leftrightarrow}$ BHAL $\overset{4}{\leftrightarrow}$ Ad $\overset{6}{\leftrightarrow}$ U $\overset{2}{\leftrightarrow}$ Kfo $\overset{4}{\leftrightarrow}$ Wt $\overset{2}{\leftrightarrow}$ Nm $\overset{2}{\leftrightarrow}$ BS $\overset{4}{\leftrightarrow}$ BGGS $\overset{1}{\leftrightarrow}$ BYOR $\overset{3}{\leftrightarrow}$ Me	t: 10, f/a: 20, n: 30
M21	BWIN $\overset{8}{\leftrightarrow}$ BKBO $\overset{5}{\leftrightarrow}$ Sch $\overset{9}{\leftrightarrow}$ JK $\overset{4}{\leftrightarrow}$ BJUN	t: 10, f/a: 20, n: 30
M27	BPKW $\overset{6}{\leftrightarrow}$ BWOK $\overset{6}{\leftrightarrow}$ Pk $\overset{5}{\leftrightarrow}$ BWED $\overset{1}{\leftrightarrow}$ Ri $\overset{12}{\leftrightarrow}$ Tm $\overset{11}{\leftrightarrow}$ Mp $\overset{4}{\leftrightarrow}$ BJUN	t: 6-7, f/a: 10-20, n: 30
M29	BHAL $\overset{4}{\leftrightarrow}$ Ad $\overset{6}{\leftrightarrow}$ U $\overset{2}{\leftrightarrow}$ Kfo $\overset{4}{\leftrightarrow}$ Wt $\overset{8}{\leftrightarrow}$ MB $\overset{3}{\leftrightarrow}$ BAHU $\overset{4}{\leftrightarrow}$ Ks $\overset{5}{\leftrightarrow}$ Mr $\overset{7}{\leftrightarrow}$ Gr $\overset{10}{\leftrightarrow}$ Hpo	t: 5-10, f/a: 10-20, n: 30
M32	BSPA $\overset{15}{\leftrightarrow}$ BSTA	t: 5-7, f/a: 10-20, n: 30
M41	BKHD $\overset{4}{\leftrightarrow}$ BSO $\overset{10}{\leftrightarrow}$ Hpo $\overset{11}{\leftrightarrow}$ Ho $\overset{4}{\leftrightarrow}$ BAHU $\overset{2}{\leftrightarrow}$ BPOP $\overset{7}{\leftrightarrow}$ BHBF	t: 4-10, f/a: 20, n: 30
M45	BSPA $\overset{11}{\leftrightarrow}$ Rl $\overset{10}{\leftrightarrow}$ BWES $\overset{7}{\leftrightarrow}$ Rw $\overset{5}{\leftrightarrow}$ RP $\overset{4}{\leftrightarrow}$ BZOS	t: 6-10, f/a: 20, n: 30
M46	BZOS $\overset{3}{\leftrightarrow}$ Kfo $\overset{4}{\leftrightarrow}$ Wt $\overset{11}{\leftrightarrow}$ BSGR $\overset{4}{\leftrightarrow}$ BSKR $\overset{9}{\leftrightarrow}$ At $\overset{16}{\leftrightarrow}$ Pi $\overset{8}{\leftrightarrow}$ Br	t: 5-10, f/a: 20, n: 30

Linie	Fahrtweg	Takt
M48	BRST $\overset{4}{\leftrightarrow}$ Slo $\overset{2}{\leftrightarrow}$ Wsg $\overset{5}{\leftrightarrow}$ BIP $\overset{7}{\leftrightarrow}$ Kt $\overset{3}{\leftrightarrow}$ BS $\overset{1}{\leftrightarrow}$ Kus $\overset{8}{\leftrightarrow}$ BPOP $\overset{4}{\leftrightarrow}$ Mi $\overset{2}{\leftrightarrow}$ Sp $\overset{7}{\leftrightarrow}$ BALX	t: 10, f/a: 20, n: 30
M49	BHST $\overset{3}{\leftrightarrow}$ Th $\overset{4}{\leftrightarrow}$ BMN $\overset{6}{\leftrightarrow}$ Wd $\overset{7}{\leftrightarrow}$ BZOS	t: 10, f/a: 20, n: 30
M76	Wsg $\overset{2}{\leftrightarrow}$ BFB $\overset{6}{\leftrightarrow}$ BPRI $\overset{11}{\leftrightarrow}$ Mf $\overset{22}{\leftrightarrow}$ BLRD	t: 5-10, f/a: 20, n: 30
M77	Mf $\overset{8}{\leftrightarrow}$ BMF	t: 10, f/a: 20, n: 30
M82	BRST $\overset{10}{\leftrightarrow}$ BLAK	t: 6-10, f/a: 20, n: 30
M85	BLIS $\overset{24}{\leftrightarrow}$ BRST $\overset{4}{\leftrightarrow}$ Slo $\overset{2}{\leftrightarrow}$ Wsg $\overset{5}{\leftrightarrow}$ BIP $\overset{7}{\leftrightarrow}$ Kt $\overset{3}{\leftrightarrow}$ BS $\overset{1}{\leftrightarrow}$ Kus $\overset{8}{\leftrightarrow}$ BPOP $\overset{6}{\leftrightarrow}$ BHBF	t: 10, f/a: 20, n: 30
TXL	TXL $\overset{8}{\leftrightarrow}$ BBEU $\overset{6}{\leftrightarrow}$ Tm $\overset{6}{\leftrightarrow}$ BHBF $\overset{9}{\leftrightarrow}$ BTOR $\overset{2}{\leftrightarrow}$ ULO $\overset{2}{\leftrightarrow}$ MIN $\overset{4}{\leftrightarrow}$ BALX	t: 6, f/a: 10
X7	R $\overset{7}{\leftrightarrow}$ SXF	t: 10, f/a: 20
X9	TXL $\overset{4}{\leftrightarrow}$ JK $\overset{4}{\leftrightarrow}$ BJUN $\overset{8}{\leftrightarrow}$ RP $\overset{4}{\leftrightarrow}$ BZOS	t: 10, a: 20
X10	BZOS $\overset{3}{\leftrightarrow}$ Kfo $\overset{1}{\leftrightarrow}$ U $\overset{5}{\leftrightarrow}$ Ad $\overset{3}{\leftrightarrow}$ BHAL $\overset{12}{\leftrightarrow}$ Os $\overset{7}{\leftrightarrow}$ BZD ($\overset{12}{\leftrightarrow}$ BTLS, nur zur HVZ)	t: 10-20, f/a: 20
X11	K $\overset{10}{\leftrightarrow}$ BSDG $\overset{14}{\leftrightarrow}$ BLIO $\overset{12}{\leftrightarrow}$ BBCH $\overset{12}{\leftrightarrow}$ Jt $\overset{15}{\leftrightarrow}$ BSW	t: 10-20, f/a: 20
X21	BWIN $\overset{6}{\leftrightarrow}$ BKBO $\overset{4}{\leftrightarrow}$ Sch $\overset{8}{\leftrightarrow}$ JK	t: 10, f/a: 20
X33	BSPA $\overset{2}{\leftrightarrow}$ AS $\overset{3}{\leftrightarrow}$ Zi $\overset{2}{\leftrightarrow}$ Hs $\overset{17}{\leftrightarrow}$ Hh $\overset{8}{\leftrightarrow}$ RR $\overset{3}{\leftrightarrow}$ BWIN	t: 6-10, f/a: 20
X34	BHST $\overset{2}{\leftrightarrow}$ Th $\overset{3}{\leftrightarrow}$ BMN $\overset{5}{\leftrightarrow}$ Wd $\overset{7}{\leftrightarrow}$ BZOS	t: 10, f/a: 20
X36	BSPA $\overset{18}{\leftrightarrow}$ Hs	t: 10, Sa-So: –

Linie	Fahrtweg	Takt
X49	BHST $\overset{2}{\leftrightarrow}$ Th $\overset{3}{\leftrightarrow}$ BMN $\overset{4}{\leftrightarrow}$ BCHS	H: 10-20, So: –
X54	BPKW ($\overset{25}{\leftrightarrow}$ BHH $\overset{9}{\leftrightarrow}$ BRWA $\overset{4}{\leftrightarrow}$ BMAZ $\overset{14}{\leftrightarrow}$ Hd, nur Mo-Sa)	t: 10-20, f/a: 20
X69	BMEA $\overset{18}{\leftrightarrow}$ E $\overset{13}{\leftrightarrow}$ BKPK	t: 20
X76	Wsg $\overset{2}{\leftrightarrow}$ BFB $\overset{4}{\leftrightarrow}$ BPRI $\overset{11}{\leftrightarrow}$ Mf	t: 20, So: –
X83	Dd $\overset{8}{\leftrightarrow}$ BRST $\overset{8}{\leftrightarrow}$ BLAK $\overset{19}{\leftrightarrow}$ BSC	t: 5-10, f/a: 20
100	BZOS $\overset{17}{\leftrightarrow}$ BTOR $\overset{2}{\leftrightarrow}$ ULO $\overset{2}{\leftrightarrow}$ MIN $\overset{5}{\leftrightarrow}$ BALX	t: 5-10, f/a: 20
101	Tm $\overset{23}{\leftrightarrow}$ Kn $\overset{2}{\leftrightarrow}$ Fpo $\overset{2}{\leftrightarrow}$ Bli $\overset{8}{\leftrightarrow}$ Bt $\overset{16}{\leftrightarrow}$ BZD	t: 10-20, f/a: 20
104	Nd $\overset{4}{\leftrightarrow}$ Th $\overset{7}{\leftrightarrow}$ BHAL $\overset{8}{\leftrightarrow}$ Fpo $\overset{2}{\leftrightarrow}$ Bli $\overset{3}{\leftrightarrow}$ Beo $\overset{11}{\leftrightarrow}$ BJLB $\overset{16}{\leftrightarrow}$ PL $\overset{8}{\leftrightarrow}$ Bo $\overset{6}{\leftrightarrow}$ Rk $\overset{11}{\leftrightarrow}$ BTP	t: 5-20, f/a: 20
106	Se $\overset{11}{\leftrightarrow}$ BBEU $\overset{10}{\leftrightarrow}$ Ha $\overset{9}{\leftrightarrow}$ Nm $\overset{2}{\leftrightarrow}$ BS $\overset{3}{\leftrightarrow}$ Kt $\overset{3}{\leftrightarrow}$ BJLB $\overset{5}{\leftrightarrow}$ BSKR	t: 20, f/a: 20
108	BLI $\overset{14}{\leftrightarrow}$ E	t: 10-20, f/a: 20
109	TXL $\overset{5}{\leftrightarrow}$ JK $\overset{2}{\leftrightarrow}$ BJUN $\overset{11}{\leftrightarrow}$ BCHS $\overset{2}{\leftrightarrow}$ Ad $\overset{5}{\leftrightarrow}$ U $\overset{2}{\leftrightarrow}$ Kfo $\overset{2}{\leftrightarrow}$ BZOS	t: 10, f/a: 20
110	BZOS $\overset{3}{\leftrightarrow}$ Kfo $\overset{1}{\leftrightarrow}$ U $\overset{5}{\leftrightarrow}$ Ad $\overset{19}{\leftrightarrow}$ T $\overset{2}{\leftrightarrow}$ Os	t: 20, f/a: 20
112	BNIS $\overset{15}{\leftrightarrow}$ BZD $\overset{19}{\leftrightarrow}$ BOSS	t: 10-20, f/a: 20
115	BZD $\overset{7}{\leftrightarrow}$ Os $\overset{14}{\leftrightarrow}$ BHO $\overset{3}{\leftrightarrow}$ Fpo	t: 10-20, f/a: 20-30
118	Ot $\overset{5}{\leftrightarrow}$ K $\overset{2}{\leftrightarrow}$ BMEX $\overset{16}{\leftrightarrow}$ BWSS	t: 10-20, f/a: 20

Linie	Fahrtweg	Takt
120	BWIN $\overset{9}{\leftrightarrow}$ PB $\overset{13}{\leftrightarrow}$ Se $\overset{4}{\leftrightarrow}$ Lpo $\overset{3}{\leftrightarrow}$ BWED $\overset{3}{\leftrightarrow}$ Ri $\overset{7}{\leftrightarrow}$ BHBF	t: 10-20, f/a: 20
122	Sch $\overset{5}{\leftrightarrow}$ PB $\overset{7}{\leftrightarrow}$ RE $\overset{6}{\leftrightarrow}$ BWM $\overset{28}{\leftrightarrow}$ BWIN	t: 5-20, f/a: 20
123	BHBF $\overset{15}{\leftrightarrow}$ Tm $\overset{6}{\leftrightarrow}$ BBEU $\overset{16}{\leftrightarrow}$ JK $\overset{5}{\leftrightarrow}$ Hl $\overset{5}{\leftrightarrow}$ Sie $\overset{3}{\leftrightarrow}$ Rm	t: 10-20, f/a: 20
124	BWIN $\overset{10}{\leftrightarrow}$ BTG $\overset{4}{\leftrightarrow}$ Tg $\overset{9}{\leftrightarrow}$ BSZF $\overset{4}{\leftrightarrow}$ BHLS	t: 10-20, f/a: 20
125	Olo $\overset{10}{\leftrightarrow}$ RE $\overset{9}{\leftrightarrow}$ Sch $\overset{22}{\leftrightarrow}$ BTG $\overset{4}{\leftrightarrow}$ Tg $\overset{22}{\leftrightarrow}$ BFOH	t: 10-20, f/a: 20
128	TXL $\overset{9}{\leftrightarrow}$ Sch $\overset{12}{\leftrightarrow}$ FN $\overset{3}{\leftrightarrow}$ Olo	t: 10, f/a: 20-30
130	BSPA $\overset{5}{\leftrightarrow}$ BSRW ($\overset{8}{\leftrightarrow}$ Rl, nur Mo-Fr zur HVZ)	t: 10-20, f/a: 20
133	Tg $\overset{3}{\leftrightarrow}$ BTG $\overset{4}{\leftrightarrow}$ Bk $\overset{4}{\leftrightarrow}$ Hh $\overset{17}{\leftrightarrow}$ Hh	t: 10-20, f/a: 20
136	BRST $\overset{32}{\leftrightarrow}$ BHD	H: 20, N: 30-60
139	P $\overset{2}{\leftrightarrow}$ Rm $\overset{2}{\leftrightarrow}$ Sie $\overset{11}{\leftrightarrow}$ Kd $\overset{3}{\leftrightarrow}$ BMN	t: 20
140	BTHF $\overset{2}{\leftrightarrow}$ At $\overset{14}{\leftrightarrow}$ Me $\overset{1}{\leftrightarrow}$ Gs $\overset{6}{\leftrightarrow}$ Pr $\overset{7}{\leftrightarrow}$ Kbo $\overset{12}{\leftrightarrow}$ BOSB	t: 10-20, f/a: 20
142	BOSB $\overset{5}{\leftrightarrow}$ Sr $\overset{10}{\leftrightarrow}$ Lu $\overset{2}{\leftrightarrow}$ Ro $\overset{4}{\leftrightarrow}$ Ob $\overset{8}{\leftrightarrow}$ BHBF ($\overset{10}{\leftrightarrow}$ Am $\overset{3}{\leftrightarrow}$ Lpo, nur Mo-Sa tagsüber)	t: 20, a/f: 20
147	BHBF $\overset{8}{\leftrightarrow}$ BFST $\overset{1}{\leftrightarrow}$ ULO $\overset{3}{\leftrightarrow}$ Fr $\overset{5}{\leftrightarrow}$ Mk ($\overset{10}{\leftrightarrow}$ BOSB, nur Mo-Sa tagsüber)	t: 10-20, a/f: 20
150	Olo $\overset{6}{\leftrightarrow}$ BSNH $\overset{15}{\leftrightarrow}$ BBLB $\overset{26}{\leftrightarrow}$ BBU	H: 10, N: 20
154	BBLB $\overset{25}{\leftrightarrow}$ BHH $\overset{11}{\leftrightarrow}$ BRWA $\overset{17}{\leftrightarrow}$ E	t: 20, a/f: 20-30

Linie	Fahrtweg	Takt
156	BSTO $\overset{4}{\leftrightarrow}$ BLST $\overset{11}{\leftrightarrow}$ BPLA	t: 20, So: –
160	BSW $\overset{25}{\leftrightarrow}$ BAGL	t: 20, a/f: 20
161	BRD $\overset{12}{\leftrightarrow}$ BWIG $\overset{12}{\leftrightarrow}$ BE	t: 20
162	BADL $\overset{14}{\leftrightarrow}$ R	H: 10, N: 20
163	BSW $\overset{10}{\leftrightarrow}$ BADL $\overset{14}{\leftrightarrow}$ BGAS $\overset{15}{\leftrightarrow}$ BFLH	t/f: 20, a: 30, Sa/So: 30
164	BKPK $\overset{18}{\leftrightarrow}$ BADL $\overset{16}{\leftrightarrow}$ BFLH $\overset{3}{\leftrightarrow}$ SXF	t: 20, f/a: 20
165	Mk $\overset{2}{\leftrightarrow}$ He $\overset{6}{\leftrightarrow}$ S $\overset{7}{\leftrightarrow}$ BTP $\overset{5}{\leftrightarrow}$ BPWD $\overset{9}{\leftrightarrow}$ BSW $\overset{11}{\leftrightarrow}$ BSPF	H: 10-20, N: 20
166	BSW $\overset{15}{\leftrightarrow}$ BPWD $\overset{6}{\leftrightarrow}$ BTP $\overset{11}{\leftrightarrow}$ Rk $\overset{5}{\leftrightarrow}$ Bo	t: 20
169	E $\overset{18}{\leftrightarrow}$ BKPK	H: 10, N: 20
170	BRST $\overset{9}{\leftrightarrow}$ BPRI $\overset{7}{\leftrightarrow}$ Ull $\overset{14}{\leftrightarrow}$ Bl $\overset{11}{\leftrightarrow}$ BBMW	t: 10-20, f/a: 20-30
171	Hpo $\overset{18}{\leftrightarrow}$ BSO $\overset{5}{\leftrightarrow}$ BNK $\overset{3}{\leftrightarrow}$ Gz $\overset{23}{\leftrightarrow}$ R $\overset{9}{\leftrightarrow}$ BFLH $\overset{3}{\leftrightarrow}$ SXF	H: 10-20, N: 20
172	R $\overset{23}{\leftrightarrow}$ Jt $\overset{27}{\leftrightarrow}$ BLRD	H: 10, N: 10-20
175	BLRD $\overset{23}{\leftrightarrow}$ BLRD $\overset{5}{\rightarrow}$ BSC $\overset{8}{\rightarrow}$ BLRD	H: 10-28, N: 20
181	Wsg $\overset{1}{\leftrightarrow}$ BFB $\overset{13}{\leftrightarrow}$ BLAK $\overset{12}{\leftrightarrow}$ Mf $\overset{12}{\leftrightarrow}$ Br	t: 5-10, f/a: 20
184	BLIO $\overset{10}{\leftrightarrow}$ BATS $\overset{9}{\leftrightarrow}$ Ka $\overset{3}{\leftrightarrow}$ At $\overset{2}{\leftrightarrow}$ BTHF ($\overset{7}{\leftrightarrow}$ BSKR, nur Mo-Sa tagsüber)	t: 10-20, a/f: 20

Linie	Fahrtweg	Takt
186	BGWD $\overset{14}{\leftrightarrow}$ Rd $\overset{4}{\leftrightarrow}$ Fw $\overset{5}{\leftrightarrow}$ Wsg $\overset{2}{\leftrightarrow}$ Slo $\overset{5}{\leftrightarrow}$ BRST $\overset{16}{\leftrightarrow}$ BOSS $\overset{4}{\leftrightarrow}$ BLIS	t: 5-20, a/f: 20
187	Tm $\overset{17}{\leftrightarrow}$ Nm $\overset{2}{\leftrightarrow}$ BS $\overset{3}{\leftrightarrow}$ Kt $\overset{7}{\leftrightarrow}$ BIP $\overset{3}{\leftrightarrow}$ BFRU $\overset{14}{\leftrightarrow}$ BLAK	H: 5-20, N: 20
188	BRST $\overset{5}{\leftrightarrow}$ BBGT	H: 10, N: 20
190	E $\overset{14}{\leftrightarrow}$ BWHH	t: 20, f/a: 20
191	BMAZ $\overset{17}{\leftrightarrow}$ KL $\overset{5}{\leftrightarrow}$ BWT	H: 10-20, N: 20
192	BFFO $\overset{12}{\leftrightarrow}$ BBDF $\overset{16}{\leftrightarrow}$ BMAZ	H: 10-20, N: 20
194	Hpo $\overset{18}{\leftrightarrow}$ BTP $\overset{5}{\leftrightarrow}$ BOK $\overset{3}{\leftrightarrow}$ BRH $\overset{1}{\leftrightarrow}$ BNPL $\overset{9}{\leftrightarrow}$ Fi $\overset{8}{\leftrightarrow}$ BFFO $\overset{7}{\leftrightarrow}$ BSPH	H: 10-20, N: 20
195	BMAZ $\overset{17}{\leftrightarrow}$ C $\overset{1}{\leftrightarrow}$ Hd $\overset{6}{\leftrightarrow}$ LL $\overset{11}{\leftrightarrow}$ BMDF	H: 6-7, N: 10, f/a: 20
197	BMDF $\overset{10}{\leftrightarrow}$ BKAD $\overset{3}{\leftrightarrow}$ KL $\overset{2}{\leftrightarrow}$ GK $\overset{20}{\leftrightarrow}$ BMEA $\overset{10}{\leftrightarrow}$ BAF $\overset{13}{\leftrightarrow}$ BHH	H: 10, N: 20
200	BZOS $\overset{14}{\leftrightarrow}$ BPOP $\overset{3}{\leftrightarrow}$ MH $\overset{4}{\leftrightarrow}$ ULO $\overset{2}{\leftrightarrow}$ MIN $\overset{5}{\leftrightarrow}$ BALX	t: 10, f/a: 20
204	BSKR $\overset{5}{\leftrightarrow}$ BJLB $\overset{4}{\leftrightarrow}$ Kt $\overset{9}{\leftrightarrow}$ Sno $\overset{2}{\leftrightarrow}$ Kfo $\overset{3}{\leftrightarrow}$ BZOS	t: 20, So: –
218	BMN $\overset{4}{\leftrightarrow}$ Th $\overset{3}{\leftrightarrow}$ BHST $\overset{30}{\leftrightarrow}$ BWSS	Mo-Fr: 60/120, Sa/So: 30/60
220	BFOH $\overset{19}{\leftrightarrow}$ BWIN $\overset{6}{\leftrightarrow}$ RR ($\overset{9}{\leftrightarrow}$ BTG $\overset{4}{\leftrightarrow}$ Tg, nur Mo-Sa tagsüber)	t: 20, f/a: 20
221	BWIN $\overset{4}{\leftrightarrow}$ RR $\overset{4}{\leftrightarrow}$ BEBD $\overset{4}{\leftrightarrow}$ Scha $\overset{5}{\leftrightarrow}$ Sch $\overset{2}{\leftrightarrow}$ Afr $\overset{8}{\leftrightarrow}$ Am $\overset{6}{\leftrightarrow}$ Lpo	t: 10-20, f/a: 20
222	Tg $\overset{3}{\leftrightarrow}$ BTG $\overset{9}{\leftrightarrow}$ BWAI	t: 10-20, f/a: 20

Linie	Fahrtweg	Takt
236	BSPA $\overset{21}{\leftrightarrow}$ Hs	t: 10-20, f/a: 20
237	BSPA $\overset{19}{\leftrightarrow}$ BAS	t: 10-20, f/a: 20
240	BOSB $\overset{17}{\leftrightarrow}$ BRH $\overset{1}{\leftrightarrow}$ BNPL $\overset{6}{\leftrightarrow}$ BLI $\overset{5}{\leftrightarrow}$ Md $\overset{11}{\leftrightarrow}$ BSTO	t: 10-20, f/a: 20
245	BZOS $\overset{5}{\leftrightarrow}$ RP $\overset{13}{\leftrightarrow}$ Tm $\overset{9}{\leftrightarrow}$ BHBF	t: 5-20, f/a: 20
246	Fw $\overset{12}{\leftrightarrow}$ BPRI $\overset{11}{\leftrightarrow}$ At $\overset{10}{\leftrightarrow}$ BHER	H: 10, N: 20
247	Lpo $\overset{4}{\leftrightarrow}$ Np $\overset{3}{\leftrightarrow}$ BWED $\overset{3}{\leftrightarrow}$ BHUM $\overset{3}{\leftrightarrow}$ BGB $\overset{9}{\leftrightarrow}$ B $\overset{1}{\leftrightarrow}$ Vo $\overset{7}{\leftrightarrow}$ BNB	t: 10-20, f/a: 20
248	BWRS $\overset{6}{\leftrightarrow}$ BOSB $\overset{4}{\leftrightarrow}$ BJB $\overset{2}{\leftrightarrow}$ BALX $\overset{5}{\leftrightarrow}$ Sp $\overset{9}{\leftrightarrow}$ Ho $\overset{4}{\leftrightarrow}$ Gs $\overset{7}{\leftrightarrow}$ PL $\overset{9}{\leftrightarrow}$ BSKR ($\overset{4}{\leftrightarrow}$ BSGR $\overset{3}{\leftrightarrow}$ BIP $\overset{4}{\leftrightarrow}$ BBUP $\overset{6}{\leftrightarrow}$ Bt, nur Mo-Sa tagsüber)	t: 10-20, f/a: 20
249	BZOS $\overset{3}{\leftrightarrow}$ Kfo $\overset{6}{\leftrightarrow}$ Hz $\overset{3}{\leftrightarrow}$ Bli $\overset{4}{\leftrightarrow}$ BHEI	t: 10, f/a: 20
250	BPKW $\overset{8}{\leftrightarrow}$ VIN ($\overset{11}{\leftrightarrow}$ BWOK $\overset{7}{\leftrightarrow}$ FN, nur Mo-Sa tagsüber)	t: 10-20, f/a: 20
255	BPKW $\overset{7}{\leftrightarrow}$ BWOK $\overset{7}{\leftrightarrow}$ Olo	t: 10, f/a: 20
256	BWAB $\overset{4}{\leftrightarrow}$ BHH $\overset{26}{\leftrightarrow}$ BLI	t: 20, f/a: 20
260	BADL $\overset{24}{\leftrightarrow}$ R	t: 10-20, f/a: 20
265	BSW $\overset{16}{\leftrightarrow}$ BBMW $\overset{11}{\leftrightarrow}$ BTP $\overset{7}{\leftrightarrow}$ S $\overset{6}{\leftrightarrow}$ He $\overset{2}{\leftrightarrow}$ Mk ($\overset{3}{\leftrightarrow}$ Sp $\overset{3}{\leftrightarrow}$ Mi, nur Mo-Sa tagsüber)	t: 20, f/a: 20
269	KL $\overset{3}{\leftrightarrow}$ BKAD $\overset{21}{\leftrightarrow}$ BKPK	t: 20, f/a: 20

Linie	Fahrtweg	Takt
277	BHER $\overset{15}{\leftrightarrow}$ Mf $\overset{13}{\leftrightarrow}$ BBCH	H: 10, N: 20
282	Bt $\overset{5}{\leftrightarrow}$ Slo $\overset{4}{\leftrightarrow}$ BRST $\overset{8}{\leftrightarrow}$ BSDE $\overset{2}{\leftrightarrow}$ BATS $\overset{7}{\leftrightarrow}$ Wl	t: 10, f/a: 20
283	BRST $\overset{16}{\leftrightarrow}$ BLAK $\overset{11}{\leftrightarrow}$ BMF	H: 10-20, N: 20
284	BLIS $\overset{10}{\leftrightarrow}$ BLIO $\overset{6}{\leftrightarrow}$ BLAK ($\overset{10}{\leftrightarrow}$ BRST, nur Mo-Sa tagsüber)	t: 20, f/a: 20
285	Os $\overset{6}{\leftrightarrow}$ BZD $\overset{29}{\leftrightarrow}$ BRST	t: 10-20, f/a: 20, Sa-So: –
291	BMAZ $\overset{4}{\leftrightarrow}$ BPOE $\overset{12}{\leftrightarrow}$ KL $\overset{4}{\leftrightarrow}$ BWT	t: 20, So: –
296	BLI $\overset{4}{\leftrightarrow}$ Fi $\overset{10}{\leftrightarrow}$ Tk $\overset{13}{\leftrightarrow}$ BKLH	t: 10-20, f/a: 20
309	BCHS $\overset{7}{\leftrightarrow}$ So	t: 20
310	BCHS $\overset{3}{\leftrightarrow}$ Ad $\overset{18}{\leftrightarrow}$ BHEI $\overset{6}{\leftrightarrow}$ Bli	H: 20, N: –, Sa-So: –
322	PB $\overset{2}{\leftrightarrow}$ LD $\overset{6}{\leftrightarrow}$ BEBD $\overset{6}{\leftrightarrow}$ RR $\overset{7}{\leftrightarrow}$ BWAI	t: 20, Sa-So: –
327	Lpo $\overset{4}{\leftrightarrow}$ Np $\overset{5}{\leftrightarrow}$ FN $\overset{3}{\leftrightarrow}$ RE $\overset{9}{\leftrightarrow}$ BSNH	t: 20, So: –
337	BFKS $\overset{29}{\leftrightarrow}$ BSPA	H: 20, N: 30, a/So: 60
347	BOK $\overset{9}{\leftrightarrow}$ BWRS ($\overset{6}{\leftrightarrow}$ WR $\overset{5}{\leftrightarrow}$ BOSB, nur Mo-Sa tagsüber)	t: 20, a/f: 20
349	BGWD $\overset{3}{\rightarrow}$ BMS $\overset{8}{\rightarrow}$ Th $\overset{4}{\rightarrow}$ Nd $\overset{5}{\rightarrow}$ BHST $\overset{3}{\rightarrow}$ Th $\overset{5}{\rightarrow}$ BMS $\overset{2}{\rightarrow}$ BGWD	t: 40, Sa-So: –
373	R $\overset{5}{\rightarrow}$ Zd $\overset{9}{\rightarrow}$ La $\overset{5}{\rightarrow}$ La $\overset{8}{\rightarrow}$ Zd $\overset{8}{\rightarrow}$ R	t: 20, So: –

Linie	Fahrtweg	Takt
377	BPWD $\overset{13}{\leftrightarrow}$ BNK $\overset{5}{\leftrightarrow}$ BHER	t: 20, f/a: 20
395	BMDF $\overset{18}{\rightarrow}$ Hö $\overset{14}{\rightarrow}$ BMDF	t: 20, f/a: 20
398	BMDF $\overset{21}{\leftrightarrow}$ E	t: 20, So: –
893	BZEP $\overset{13}{\leftrightarrow}$ BBU $\overset{33}{\leftrightarrow}$ BHH	t: 20, Sa/So: 60
N1	BWRS $\overset{3}{\leftrightarrow}$ S $\overset{4}{\leftrightarrow}$ Gr $\overset{2}{\leftrightarrow}$ Kbo $\overset{1}{\leftrightarrow}$ Pr $\overset{2}{\leftrightarrow}$ Ho $\overset{4}{\leftrightarrow}$ Mo $\overset{2}{\leftrightarrow}$ MB $\overset{3}{\leftrightarrow}$ Kus $\overset{1}{\leftrightarrow}$ BS $\overset{1}{\leftrightarrow}$ Nm $\overset{3}{\leftrightarrow}$ Wt $\overset{3}{\leftrightarrow}$ Kfo $\overset{1}{\leftrightarrow}$ BZOS	n: 15-30, WE: –
N2	Rl $\overset{5}{\leftrightarrow}$ Nd $\overset{2}{\leftrightarrow}$ Th $\overset{1}{\leftrightarrow}$ Kd $\overset{2}{\leftrightarrow}$ So $\overset{3}{\leftrightarrow}$ Bmo $\overset{2}{\leftrightarrow}$ Obi $\overset{2}{\leftrightarrow}$ RP $\overset{9}{\leftrightarrow}$ BZOS $\overset{2}{\leftrightarrow}$ Kfo $\overset{3}{\leftrightarrow}$ Wt $\overset{3}{\leftrightarrow}$ Nm $\overset{1}{\leftrightarrow}$ BS $\overset{1}{\leftrightarrow}$ Kus $\overset{5}{\leftrightarrow}$ BPOP $\overset{2}{\leftrightarrow}$ MH $\overset{3}{\leftrightarrow}$ ULO $\overset{10}{\leftrightarrow}$ BHKM $\overset{2}{\leftrightarrow}$ W $\overset{3}{\leftrightarrow}$ Lu $\overset{1}{\leftrightarrow}$ Sz $\overset{3}{\leftrightarrow}$ EB $\overset{3}{\leftrightarrow}$ BSAL $\overset{3}{\leftrightarrow}$ VIN $\overset{3}{\leftrightarrow}$ BPKW	n: 15-30, WE: –
N3	Wt $\overset{3}{\leftrightarrow}$ Kfo $\overset{3}{\leftrightarrow}$ Sno $\overset{1}{\leftrightarrow}$ Hz $\overset{2}{\leftrightarrow}$ Fpo $\overset{2}{\leftrightarrow}$ BHO $\overset{2}{\leftrightarrow}$ BHEI $\overset{5}{\leftrightarrow}$ Bt $\overset{4}{\leftrightarrow}$ DD $\overset{2}{\leftrightarrow}$ T $\overset{4}{\leftrightarrow}$ Os $\overset{4}{\leftrightarrow}$ K $\overset{2}{\leftrightarrow}$ BMEX	n: 30, WE: –
N5	BHKM $\overset{4}{\leftrightarrow}$ BALX $\overset{2}{\leftrightarrow}$ Si $\overset{2}{\leftrightarrow}$ Sr $\overset{2}{\leftrightarrow}$ WR $\overset{2}{\leftrightarrow}$ Ft $\overset{2}{\leftrightarrow}$ Sa $\overset{2}{\leftrightarrow}$ BFA $\overset{2}{\leftrightarrow}$ Md $\overset{13}{\leftrightarrow}$ BWT $\overset{4}{\leftrightarrow}$ KL $\overset{2}{\leftrightarrow}$ GK $\overset{2}{\leftrightarrow}$ C $\overset{2}{\leftrightarrow}$ Hd $\overset{4}{\leftrightarrow}$ LL $\overset{1}{\leftrightarrow}$ Hö	n: 15-30, WE: –
N6	Tg $\overset{2}{\leftrightarrow}$ Bk $\overset{2}{\leftrightarrow}$ Hh $\overset{4}{\leftrightarrow}$ Scha $\overset{3}{\leftrightarrow}$ Sch $\overset{3}{\leftrightarrow}$ Afr $\overset{1}{\leftrightarrow}$ Rb $\overset{3}{\leftrightarrow}$ Se $\overset{3}{\leftrightarrow}$ Lpo $\overset{1}{\leftrightarrow}$ BWED $\overset{2}{\leftrightarrow}$ Ri $\overset{2}{\leftrightarrow}$ Sk $\overset{2}{\leftrightarrow}$ NA $\overset{2}{\leftrightarrow}$ Ob $\overset{1}{\leftrightarrow}$ BFST $\overset{2}{\leftrightarrow}$ ULO $\overset{1}{\leftrightarrow}$ Mi $\overset{2}{\leftrightarrow}$ Ks $\overset{10-15}{\leftrightarrow}$ Me $\overset{1}{\leftrightarrow}$ PL $\overset{2}{\leftrightarrow}$ Ps $\overset{1}{\leftrightarrow}$ BTHF $\overset{2}{\leftrightarrow}$ At $\overset{2}{\leftrightarrow}$ Ka $\overset{2}{\leftrightarrow}$ Ull $\overset{2}{\leftrightarrow}$ Wl $\overset{2}{\leftrightarrow}$ Mf	n: 30, WE: –

Linie	Fahrtweg	Takt
N7	BSPA $\overset{2}{\leftrightarrow}$ AS $\overset{1}{\leftrightarrow}$ Zi $\overset{2}{\leftrightarrow}$ Hs $\overset{2}{\leftrightarrow}$ P $\overset{2}{\leftrightarrow}$ Rm $\overset{2}{\leftrightarrow}$ Sie $\overset{5}{\leftrightarrow}$ JK $\overset{3}{\leftrightarrow}$ BJUN $\overset{2}{\leftrightarrow}$ Mp $\overset{2}{\leftrightarrow}$ Rw $\overset{2}{\leftrightarrow}$ Bmo $\overset{3}{\leftrightarrow}$ BCHS $\overset{5}{\leftrightarrow}$ Ad $\overset{3}{\leftrightarrow}$ Kn $\overset{1}{\leftrightarrow}$ Fpo $\overset{2}{\leftrightarrow}$ Bli $\overset{7}{\leftrightarrow}$ Beo $\overset{1}{\leftrightarrow}$ Bpo $\overset{1}{\leftrightarrow}$ Ei $\overset{2}{\leftrightarrow}$ Kt $\overset{2}{\leftrightarrow}$ BGGS $\overset{1}{\leftrightarrow}$ BYOR $\overset{3}{\leftrightarrow}$ Me $\overset{2}{\leftrightarrow}$ Gs $\overset{3}{\leftrightarrow}$ Sü $\overset{5}{\leftrightarrow}$ Hpo $\overset{3}{\leftrightarrow}$ Hpo $\overset{3}{\leftrightarrow}$ Rk $\overset{7}{\leftrightarrow}$ BNK $\overset{2}{\leftrightarrow}$ Gz $\overset{17}{\leftrightarrow}$ R	n: 30, WE: –
N7	R $\overset{8}{\leftrightarrow}$ BFLH $\overset{2}{\leftrightarrow}$ SXF	n: 30
N8	BWIN $\overset{3}{\leftrightarrow}$ RR $\overset{3}{\leftrightarrow}$ BKBO $\overset{2}{\leftrightarrow}$ LD $\overset{2}{\leftrightarrow}$ PB $\overset{3}{\leftrightarrow}$ RE $\overset{2}{\leftrightarrow}$ FN $\overset{4}{\leftrightarrow}$ Olo $\overset{3}{\leftrightarrow}$ Pk $\overset{2}{\leftrightarrow}$ BGB $\overset{3}{\leftrightarrow}$ Vo $\overset{1}{\leftrightarrow}$ B $\overset{2}{\leftrightarrow}$ Ro $\overset{1}{\leftrightarrow}$ W $\overset{4}{\leftrightarrow}$ BHKM $\overset{4}{\leftrightarrow}$ BJB $\overset{2}{\leftrightarrow}$ He $\overset{2}{\leftrightarrow}$ Mr $\overset{5-6}{\leftrightarrow}$ Kbo $\overset{2-3}{\leftrightarrow}$ ST $\overset{2}{\leftrightarrow}$ Hpo $\overset{1}{\leftrightarrow}$ Bo $\overset{2}{\leftrightarrow}$ L $\overset{2}{\leftrightarrow}$ BHER	n: 10-30, WE: –
N9	Olo $\overset{3}{\leftrightarrow}$ Np $\overset{5}{\leftrightarrow}$ Lpo $\overset{2}{\leftrightarrow}$ Am $\overset{2}{\leftrightarrow}$ BWF $\overset{1}{\leftrightarrow}$ Bi $\overset{1}{\leftrightarrow}$ Tm $\overset{3}{\leftrightarrow}$ BTGN $\overset{7}{\leftrightarrow}$ BZOS $\overset{2}{\leftrightarrow}$ Kfo $\overset{3}{\leftrightarrow}$ Sno $\overset{1}{\leftrightarrow}$ Gt $\overset{2}{\leftrightarrow}$ Beo $\overset{3}{\leftrightarrow}$ BBUP $\overset{2}{\leftrightarrow}$ Fw $\overset{3}{\leftrightarrow}$ Wsg $\overset{1}{\leftrightarrow}$ Slo $\overset{3}{\leftrightarrow}$ BRST	n: 15-30, WE: –
N10	BZOS $\overset{2}{\leftrightarrow}$ Kfo $\overset{1}{\leftrightarrow}$ U $\overset{5}{\leftrightarrow}$ Ad $\overset{5}{\leftrightarrow}$ BHO $\overset{13}{\leftrightarrow}$ Os $\overset{9}{\leftrightarrow}$ BZD	n: 30
N16	BNIS $\overset{4}{\leftrightarrow}$ BWSS $\overset{21}{\leftrightarrow}$ BPDH	n: 60
N20	BFOH $\overset{13}{\leftrightarrow}$ BWIN $\overset{7}{\leftrightarrow}$ PB $\overset{9}{\leftrightarrow}$ Se $\overset{4-8}{\leftrightarrow}$ Lpo $\overset{1-6}{\leftrightarrow}$ BWED $\overset{1}{\leftrightarrow}$ Ri $\overset{6}{\leftrightarrow}$ BHBF	n: 30
N22	Tg $\overset{3}{\leftrightarrow}$ BTG $\overset{8}{\leftrightarrow}$ BWAI	n: 30
N24	BWIN $\overset{9}{\leftrightarrow}$ BTG $\overset{3-8}{\leftrightarrow}$ Tg $\overset{8-13}{\leftrightarrow}$ BSZF $\overset{4}{\leftrightarrow}$ BHLS	n: 30
N25	BTG $\overset{2}{\leftrightarrow}$ Tg $\overset{10}{\leftrightarrow}$ BHED	n: 30
N79	BPWA $\overset{5}{\leftrightarrow}$ BSO $\overset{2}{\leftrightarrow}$ BNK $\overset{5}{\leftrightarrow}$ BHER $\overset{11}{\leftrightarrow}$ Mf	n: 30
N81	Wsg $\overset{1}{\leftrightarrow}$ BFB $\overset{11}{\leftrightarrow}$ BLAK $\overset{11}{\leftrightarrow}$ BMF	n: 30
N84	BTHF $\overset{2}{\leftrightarrow}$ At $\overset{8}{\leftrightarrow}$ BATS $\overset{8}{\leftrightarrow}$ BLIO $\overset{17}{\leftrightarrow}$ BZD	n: 30
N88	BRST $\overset{3}{\leftrightarrow}$ BBGT $\overset{17}{\leftrightarrow}$ BOSS $\overset{3}{\leftrightarrow}$ BLIS	n: 30

Linie	Fahrtweg	Takt
N26	Se $\overset{7}{\leftrightarrow}$ BBEU $\overset{8}{\leftrightarrow}$ Ha $\overset{5}{\leftrightarrow}$ Nm $\overset{3}{\leftrightarrow}$ Wt $\overset{3}{\leftrightarrow}$ Kfo $\overset{1}{\leftrightarrow}$ BZOS	n: 30
N33	Tg $\overset{3}{\leftrightarrow}$ BTG $\overset{4}{\leftrightarrow}$ Hh $\overset{20}{\leftrightarrow}$ Hs	n: 30
N39	Rm $\overset{2}{\leftrightarrow}$ P	n: 30
N40	Tm $\overset{7}{\leftrightarrow}$ BHBF $\overset{3}{\leftrightarrow}$ NA $\overset{1}{\leftrightarrow}$ BNB $\overset{3}{\leftrightarrow}$ Ro $\overset{1}{\leftrightarrow}$ W $\overset{3}{\leftrightarrow}$ BHKM $\overset{3}{\leftrightarrow}$ BJB $\overset{4}{\leftrightarrow}$ BOSB	n: 30
N42	Th $\overset{5}{\leftrightarrow}$ BHAL $\overset{8}{\leftrightarrow}$ Fpo $\overset{2}{\leftrightarrow}$ Bli $\overset{2}{\leftrightarrow}$ Beo $\overset{7}{\leftrightarrow}$ BJLB $\overset{4}{\leftrightarrow}$ PL $\overset{2-6}{\leftrightarrow}$ Me $\overset{2-6}{\leftrightarrow}$ Ho $\overset{6}{\leftrightarrow}$ Sp $\overset{4}{\leftrightarrow}$ BHKM $\overset{2}{\leftrightarrow}$ W $\overset{2}{\leftrightarrow}$ BALX	n: 30
N50	Tk $\overset{5}{\leftrightarrow}$ Fi $\overset{2}{\leftrightarrow}$ BLI $\overset{3}{\leftrightarrow}$ Md $\overset{36}{\leftrightarrow}$ BPKW $\overset{4}{\leftrightarrow}$ BPHD	n: 30
N52	Olo $\overset{5}{\leftrightarrow}$ BSNH	n: 30
N56	Md $\overset{23}{\rightarrow}$ BHH $\overset{3}{\rightarrow}$ BWAB $\overset{7}{\rightarrow}$ BGSE $\overset{16}{\rightarrow}$ Md	n: 30
N60	BADL $\overset{21}{\leftrightarrow}$ BFLH $\overset{2}{\leftrightarrow}$ SXF	n: 30
N61	BFRH $\overset{12}{\leftrightarrow}$ BRD (nur am WE) $\overset{8}{\leftrightarrow}$ BWIG	n: 30
N65	BHKM $\overset{4}{\leftrightarrow}$ BJB $\overset{1}{\leftrightarrow}$ He $\overset{5}{\leftrightarrow}$ S $\overset{6}{\leftrightarrow}$ BTP $\overset{3}{\leftrightarrow}$ BPWA $\overset{12}{\leftrightarrow}$ BSW $\overset{3}{\leftrightarrow}$ BADL $\overset{4}{\leftrightarrow}$ BSPF	n: 30
N67	BSW $\overset{21}{\leftrightarrow}$ BFRH	n: 30
N68	BADL $\overset{4}{\leftrightarrow}$ BGAS	n: 30
N69	BWT $\overset{4}{\leftrightarrow}$ E $\overset{16}{\leftrightarrow}$ BKPK	n: 15-30
N90	BWT $\overset{6}{\leftrightarrow}$ BMDF $\overset{15}{\leftrightarrow}$ BKPK	n: 30
N91	BWT $\overset{5}{\leftrightarrow}$ KL	n: 30
N94	Hpo $\overset{3}{\leftrightarrow}$ Rk $\overset{10}{\leftrightarrow}$ BTP $\overset{3}{\leftrightarrow}$ BOK $\overset{1}{\leftrightarrow}$ BRH $\overset{1}{\leftrightarrow}$ BNPL $\overset{4}{\leftrightarrow}$ BLI $\overset{4}{\leftrightarrow}$ Md	n: 30
N95	BWT $\overset{2}{\leftrightarrow}$ BKAD $\overset{5}{\leftrightarrow}$ BMDF	n: 30

Linie	Umsteigemöglichkeiten
M1	RE1 RE2 RE7 RB14 RB21 RB22 S1 S2 S25 S26 S3 S41 S42 S5 S7 S8 S85 S9 U2 U6 U8 M4, M5, M6, M8, M10, M13, 12, 50, M21, M27, X54, 107, 122, 124, 142, 147, 150, 155, 250, 255, N2 N5 N6 N8 N40, N42, N50, N53, N65
M2	RE1 RE2 RE7 RB14 S3 S41 S42 S5 S7 S8 S85 S9 U2 U6 U8 M4, M5, M6, M8, M10, M13, 12, M48, TXL, X54, 100, 142, 156, 158, 200, 255, N2 N5 N42, N50, N58, N65
M4	RE1 RE2 RE7 RB12 RB14 RB24 S3 S41 S42 S5 S7 S75 S8 S85 S9 U2 U6 U8 M1, M2, M5, M6, M8, M10, M13, M17, 12, 27, M48, TXL, X54, 100, 142, 154, 156, 197, 200, 255, 256, 259, 294, 893, N2 N5 N8 N40, N42, N50, N56, N65, N97
M5	DB RE1 RE2 RE3 RE4 RE5 RE7 RB10 RB14 RB21 RB22 S1 S2 S25 S26 S3 S41 S42 S5 S7 S8 S85 S9 U2 U5 U55 U6 U8 M1, M2, M4, M6, M8, M10, M13, M17, 12, 16, 27, M41, M48, M85, TXL, X54, 100, 120, 123, 142, 147, 154, 156, 197, 200, 245, 256, 294, 893, N2 N5 N6 N8 N20, N40, N42, N50, N56, N65
M6	RE1 RE2 RE7 RB14 S3 S41 S42 S5 S7 S8 S85 S9 U2 U6 U8 M2, M4, M5, M8, M10, M13, M17, 16, 18, 27, M48, TXL, X54, X69, 100, 142, 154, 156, 191, 192, 195, 197, 200, 291, 395, N2 N5 N8 N40, N42, N50, N65, N95
M8	DB RE1 RE2 RE3 RE4 RE5 RE7 RB10 RB14 RB21 RB22 S1 S2 S25 S26 S3 S41 S42 S5 S7 S75 S8 S85 S9 U2 U55 U6 U8 M1, M2, M4, M5, M6, M10, M13, M17, 12, 16, 18, 21, 27, 37, M41, M85, TXL, 120, 123, 142, 147, 154, 156, 192, 192, 194, 197, 200, 245, 256, 291, 390, 901, N6 N8 N20, N40, N50, N56, N91, N97
M10	DB RE1 RE2 RE3 RE4 RE5 RE7 RB10 RB14 RB21 RB22 S1 S2 S25 S26 S3 S5 S7 S9 U1 U2 U3 U5 U55 U6 U8 M1, M2, M4, M5, M6, M8, M13, 12, 21, M41, M85, TXL, 120, 123, 142, 147, 200, 240, 245, 247, 347, N1 N2 N5 N6 N8 N20, N40
M13	S1 S2 S25 S26 S3 S41 S42 S5 S7 S8 S85 S9 U5 U6 U8 U9 M1, M2, M4, M5, M6, M8, M10, 16, 21, 50, 106, 120, 125, 128, 150, 156, 158, 221, 240, 255, 259, 327, N2 N5 N6 N8 N9 N20, N26, N40, N50, N52
M17	RB12 RB24 S3 S45 S46 S47 S5 S7 S75 S8 S85 S9 U6 M4, M5, M6, M8, 16, 21, 27, 37, 60, 67, M11, X11, X54, 108, 154, 160, 163, 165, 166, 192, 194, 197, 256, 294, 296, 365, 396, 893, N5 N50, N56, N65, N67, N97
12	RE1 RE2 RE7 RB14 RB21 RB22 S1 S2 S25 S26 S3 S5 S7 S9 U2 U6 M1, M2, M4, M5, M8, M10, M13, 27, X54, 142, 147, 156, 158, 247, 255, 259
16	S41 S42 S7 S8 S85 U5 M5, M6, M8, M13, M17, 21, 27, X54, 191, 192, 195, 197, 240, 291, 390, 901
18	S7 S75 U8 M6, M8, X54, X69, 154, 191, 192, 194, 195, 197, 291, 395
21	RB12 RB24 RB25 RB26 S3 S45 S46 S47 S5 S7 S75 S8 S85 S9 U5 M8, M10, M13, M17, 16, 27, 37, 60, 67, M11, X11, 160, 163, 165, 166, 194, 240, 256, 265, 365
27	S3 S5 S7 S75 U5 M4, M5, M6, M8, M17, 12, 16, 21, 37, 60, 61, 62, 63, 67, 68, X54, 108, 156, 158, 162, 164, 165, 169, 192, 194, 255, 256, 259, 294, 296, 365, 396
37	RB12 RB24 RB25 RB26 S3 S45 S46 S47 S5 S7 S75 S8 S85 S9 U5 M8, M17, 21, 27, 60, 67, M11, X11, 108, 160, 163, 165, 166, 192, 194, 240, 256, 265, 296, 365, 396
50	S1 S2 S25 S26 S8 S85 U2 U6 U8 U9 M1, M13, M27, X54, 106, 107, 120, 124, 125, 128, 150, 154, 155, 221, 250, 255, 259, 327
60	RB24 S45 S46 S47 S8 S85 S9 M17, 21, 27, 37, 61, 62, 63, 67, 68, 88, M11, X11, X69, 160, 163, 164, 166, 169, 265, 269, 365
61	S3 S45 S46 S47 S8 S85 S9 27, 60, 62, 63, 67, 68, 88, X69, 161, 162, 163, 164, 165, 169, 260, 269
62	RB26 S3 S5 27, 60, 61, 63, 67, 68, X69, 108, 162, 164, 165, 169, 195, 197, 269, 395, 398, F12
63	S3 S45 S46 S47 S8 S85 S9 27, 60, 61, 62, 67, 68, X69, 108, 162, 163, 164, 165, 169, 260, 269, 398
67	RB24 S45 S46 S47 S8 S85 S9 M17 21, 27, 37, 60, 61, 62, 63, 68, M11, X11, 160, 162, 163, 164, 165, 166, 169, 265, 365
68	S3 S46 S8 S85 27, 60, 61, 62, 63, 67, X69, 162, 163, 164, 165, 168, 169, 263, 269, 363, 733, F12, F21
87	S3 161, 418, 420, 950
88	S3 60, 61, 161, 420, 950, 951
89	RB26 S5 885, 923, 926, 927, 929, 931, 932, 933, 934, 936, 937, 946, 947, 950, 955, 966, F39
91	RE1 RE7 RB20 RB21 RB22 RE23 RB33 S7 92, 93, 94, 96, 98, 99, X1, X5, X15, X43, 580, 601, 603, 604, 605, 606, 607, 608, 610, 611, 614, 619, 631, 643, 650, 690, 691, 692, 693, 694, 695, 699, 715, 750, F1
92	RE1 RB20 RB21 RB22 RE23 S7 91, 93, 94, 96, 98, 99, X1, X5, X15, X43, 118, 580, 601, 603, 604, 605, 606, 607, 608, 610, 611, 614, 619, 631, 643, 650, 690, 691, 692, 693, 694, 695, 696, 697, 699, 715, 750
93	RE1 RE7 RB20 RB21 RB22 RE23 RB33 S7 91, 92, 94, 96, 98, 99, X1, X5, X15, X43, 316, 580, 601, 603, 604, 605, 606, 607, 608, 610, 611, 614, 619, 631, 643, 650, 690, 691, 692, 693, 694, 695, 699, 715, 750
94	RE1 RB20 RB21 RB22 RE23 S7 91, 92, 93, 96, 98, 99, X5, X15, 580, 601, 603, 604, 605, 606, 610, 616, 631, 690, 692, 693, 694, 695, F1
96	RE1 RB20 RB21 RB22 RE23 S7 91, 92, 93, 94, 98, 99, X1, X5, X15, X43, 118, 580, 601, 603, 604, 605, 606, 607, 608, 609, 610, 611, 614, 619, 631, 638, 643, 650, 690, 691, 692, 694, 695, 696, 697, 699, 715, 750
98	RE1 RE7 RB20 RB21 RB22 RE23 RB33 S7 91, 92, 93, 94, 96, 99, X1, X5, X15, X43, 580, 601, 603, 604, 605, 606, 607, 608, 610, 611, 614, 619, 631, 643, 650, 690, 691, 692, 693, 694, 695, 699, 715, 750, F1
99	RE1 RB20 RB21 RB22 RE23 S7 91, 92, 93, 94, 96, 98, X1, X5, X15, X43, 580, 601, 603, 604, 605, 606, 607, 608, 610, 611, 614, 616, 619, 631, 643, 650, 690, 691, 692, 693, 694, 695, 715, 750
M11	RE3 RE4 RE5 RB24 S1 S2 S25 S26 S45 S46 S47 S8 S85 S9 U3 U7 M17, 21, 37, 60, 67, M44, M48, M76, M77, M82, M85, X11, X76, X83, 101, 110, 112, 160, 163, 166, 171, 172, 179, 184, 186, 188, 265, 277, 284, 285, 373, 380, 710, 711, 744, N3 N7 N81, N84, N88
M19	S1 S2 S25 S26 S41 S42 S46 S7 U1 U2 U3 U4 U6 U7 U9 M29, M46, M48, M85, X10, 101, 104, 106, 109, 110, 140, 186, 187, 204, 249, 310, 349, N1 N2 N3 N6 N7 N9 N10, N26, N42
M21	RE4 RE6 RB10 RB13 S1 S25 S26 S41 S42 U6 U7 U8 M1, M27, X9, X21, X33, 109, 120, 122, 123, 124, 125, 128, 220, 221, 222, 322, N6 N7 N8 N20, N24, N53
M27	RE4 RE6 RB10 RB13 S1 S2 S25 S26 S41 S42 S8 S85 U2 U6 U7 U8 U9 M1, M13, 50, M21, TXL, X9, X54, 101, 106, 109, 120, 123, 155, 187, 245, 247, 250, 255, N2 N6 N7 N8 N9 N20, N26, N40, N50
M29	S1 S2 S25 S26 S41 S42 S46 U1 U2 U3 U6 U7 U8 U9 M19, M41, M46, M48, M85, X10, 100, 101, 104, 106, 109, 110, 115, 140, 171, 186, 187, 194, 204, 248, 249, 310, N1 N1 N3 N6 N7 N8 N9 N10, N26, N42, N94
M32	DB RE2 RE4 RE6 RB10 RB13 RB14 S3 S9 U7 M37, M45, M49, X33, X36, X49, 130, 131, 134, 135, 136, 137, 236, 237, 337, 338, 604, 638, 653, 655, 663, 670, 671, N7 N30, N34
M37	DB RE2 RE4 RE6 RB10 RB13 RB14 S3 S9 U7 M32, M45, M49, X33, X36, X49, 130, 131, 134, 135, 136, 137, 236, 237, 337, 638, 671, N7 N30, N34
M41	DB RE1 RE2 RE3 RE4 RE5 RE7 RB10 RB14 RB21 RB22 S1 S2 S25 S26 S3 S41 S42 S45 S46 S47 S5 S7 S9 U1 U2 U3 U55 U6 U7 U8 M5, M8, M10, M29, M48, M85, TXL, 104, 120, 123, 140, 142, 147, 166, 170, 171, 194, 200, 245, 248, 265, 341, 377, N1 N2 N7 N8 N20, N40, N42, N70, N79, N94
M44	S41 S42 S45 S46 S47 U8 M11, M46, X11, 170, 172, 181, 246, 277, 370, 377, 742, 743, 744, N8 N79
M45	DB RE1 RE2 RE4 RE6 RE7 RB10 RB13 RB14 RB21 RB22 S3 S41 S42 S46 S5 S7 S9 U2 U7 U9 M32, M37, M46, M49, X9, X10, X33, X34, X36, 100, 101, 109, 110, 130, 131, 134, 135, 136, 137, 139, 200, 204, 236, 237, 245, 249, 309, 337, 638, 671, N2 N7 N9 N10, N26, N30, N34
M46	DB RE1 RE2 RE3 RE4 RE5 RE7 RB10 RB14 RB21 RB22 S1 S2 S25 S26 S3 S41 S42 S45 S46 S5 S7 S9 U1 U2 U3 U6 U7 U9 M19, M29, M44, M45, M48, M49, M85, X9, X10, X34, 100, 104, 106, 109, 110, 140, 170, 171, 181, 184, 187, 200, 204, 245, 246, 248, 249, 277, N1 N2 N3 N7 N9 N10, N26, N42, N79, N84
M48	RE1 RE2 RE3 RE4 RE5 RE7 RB10 RB14 S1 S2 S25 S26 S3 S41 S42 S46 S5 S7 S9 U1 U2 U3 U4 U5 U6 U7 U8 U9 M2, M4, M5, M6, M11, M19, M29, M41, M46, M76, M82, M85, TXL, X10, X11, X76, X83, 100, 101, 104, 106, 112, 115, 118, 147, 181, 186, 187, 188, 200, 204, 246, 248, 265, 282, 283, 284, 285, 380, 623, N1 N2 N5 N7 N8 N9 N10, N12, N16, N40, N42, N65, N81, N84, N88
M49	RE1 RE2 RE7 RB14 RB21 RB22 S3 S41 S42 S46 S5 S7 S9 U2 U7 U9 M32, M37, M45, M46, X9, X10, X34, X49, 100, 101, 104, 109, 110, 131, 134, 135, 136, 137, 139, 200, 204, 218, 236, 245, 249, 309, 338, 349, 638, N1 N2 N7 N9 N10, N26, N34, N42
M76	S1 S2 S25 S26 U6 U9 M11, M48, M77, M85, X11, X76, X83, 170, 172, 175, 179, 181, 184, 186, 187, 246, 275, 277, 282, 743, N6 N9 N79, N81, N84
M77	S2 U6 M11, M76, M82, X11, X76, 112, 179, 181, 277, 283, N6 N79, N81
M82	S1 S25 S26 U9 M11, M48, M77, M85, X11, X83, 112, 181, 184, 186, 187, 188, 282, 283, 284, 285, 380, N9 N81, N84, N88

Linie	Umsteigemöglichkeiten
M85	DB RB1 RE2 RB3 RB4 RB5 RB7 RB10 RB13 RB14 RB21 RB22 S1 S2 S25 S26 S3 S41 S42 S46 S5 S7 S9 U1 U2 U3 U4 U55 U7 U9 M M5, M8, M10, M M11, M19, M29, M41, M46, M48, M76, M82, TXL, X11, X76, X83, 104, 106, 112, 120, 123, 142, 147, 181, 184, 186, 187, 188, 200, 204, 245, 246, 248, 282, 283, 284, 285, 380, N1 N2 N7 N9 N20, N40, N42, N84, N88
TXL	TXL, DB RB1 RE2 RB3 RB4 RB5 RB7 RB10 RB14 RB21 RB22 S1 S2 S25 S26 S3 S41 S42 S5 S7 S9 U2 U5 U55 U3 U9 M M2, M4, M5, M6, M8, M10, M M27, M41, M48, M85, X9, 100, 101, 106, 109, 120, 123, 128, 142, 147, 187, 200, 245
X7	SXF, U7 162, 164, 171, 172, 260, 271, 371, 372, 373, 734, 735, 736, 738, 741, 744
X9	TXL, RB1 RE2 RB4 RB6 RB7 RB10 RB13 RB14 RB21 RB22 S3 S41 S42 S5 S7 S9 U2 U7 U9 M M21, M27, M45, M46, M49, TXL, X10, X21, X34, 100, 109, 110, 123, 128, 200, 204, 245, 249
X10	RE1 RE2 RB7 RB14 RB21 RB22 S1 S25 S26 S3 S41 S42 S46 S5 S7 S9 U1 U2 U3 U7 U9 M M19, M29, M45, M46, M48, M49, X1, X9, X11, X34, X83, 100, 101, 104, 109, 110, 112, 115, 118, 184, 186, 200, 204, 245, 249, 285, 310, 600, 601, 602, 615, 620, 621, 623, 624, 625, 626, 629, 704
X11	RB3 RB4 RB5 RB24 S1 S2 S25 S26 S45 S46 S47 S8 S85 S9 U3 U7 M M17, 21, 37, 60, 67, M M11, M44, M48, M76, M77, M82, M85, X10, X76, X83, 101, 112, 115, 118, 160, 163, 166, 171, 172, 179, 184, 186, 188, 265, 277, 284, 285, 373, 380, 622, 623, 710, 711, 744
X21	S1 S25 S26 U6 U7 U8 M M21, X9, X33, 109, 120, 122, 123, 124, 125, 128, 221, 222
X33	DB RE2 RB4 RB6 RB10 RB13 RB14 S1 S26 S3 S9 U6 U7 U8 M M21, M32, M37, M45, X21, X36, 120, 122, 124, 125, 130, 133, 134, 135, 136, 137, 139, 220, 221, 222, 236, 237, 322, 337, 638, 671
X34	RE1 RE2 RB7 RB14 RB21 RB22 S3 S41 S42 S46 S5 S7 S9 U2 U7 U9 M M45, M46, M49, X9, X10, X49, 100, 101, 104, 109, 110, 134, 135, 136, 139, 200, 204, 218, 234, 236, 245, 249, 309, 334, 349, 697, F10
X36	DB RE2 RB4 RB6 RB10 RB13 RB14 S3 S9 U7 M M32, M37, M45, X33, 130, 134, 135, 136, 137, 139, 236, 237, 337, 638, 671
X49	RE1 RB7 RB14 RB21 RB22 S3 S41 S42 S46 S5 S7 S9 U2 U7 M M32, M37, M49, X34, 104, 109, 131, 134, 135, 136, 137, 139, 218, 236, 237, 309, 310, 338, 349, 638
X54	RB12 RB24 S2 S7 S75 S8 S85 U2 U5 M M2, M4, M5, M6, M17, 12, 16, 18, 27, X69, 154, 156, 158, 191, 192, 195, 197, 250, 255, 256, 259, 291, 294, 893
X69	S3 S7 U5 M M6, 18, 60, 61, 62, 63, 68, X54, 108, 154, 164, 165, 169, 190, 191, 195, 197, 269, 291, 398
X76	S1 S2 S25 S26 U6 U9 M M11, M48, M76, M77, M85, X11, X83, 170, 172, 175, 179, 181, 184, 186, 187, 246, 277, 282, 743
X83	S1 S2 S25 S26 U3 U9 M M11, M48, M76, M77, M82, M85, X10, X11, X76, 101, 112, 115, 172, 175, 181, 184, 186, 187, 188, 277, 282, 283, 284, 285, 380, 710, 711, 743
100	RE1 RE2 RB7 RB14 RB21 RB22 S1 S2 S25 S26 S3 S5 S7 S9 U2 U5 U55 U3 U9 M M2, M4, M5, M6, M29, M45, M46, M48, M49, TXL, X9, X10, X34, 106, 109, 110, 147, 187, 200, 204, 245, 249
101	S1 U3 U7 U9 M M11, M19, M27, M29, M45, M48, M49, TXL, X10, X11, X34, X83, 104, 109, 110, 112, 115, 118, 123, 186, 187, 245, 248, 249, 282, 285, 310, 623
104	S1 S3 S41 S42 S46 S5 S7 S8 S85 S9 U2 U3 U6 U7 U8 U9 M M19, M29, M41, M46, M48, M49, M85, X10, X34, X49, 101, 106, 110, 115, 140, 165, 166, 171, 187, 194, 204, 218, 248, 249, 265, 310, 347, 349
106	DB RB3 RB4 RB5 RB10 S1 S2 S25 S26 S41 S42 S45 S46 U1 U2 U3 U4 U6 U7 U9 M M13, 50, M M19, M27, M29, M46, M48, M85, TXL, 100, 101, 104, 120, 123, 184, 187, 200, 204, 221, 245, 248
107	M M1, 124, 150, 250, 806, 810
108	RB12 RB24 RB25 RB26 S5 S7 S75 U5 M M17, 27, 37, 62, 63, X69, 154, 169, 190, 192, 194, 240, 269, 296, 398, 945
109	TXL, RB1 RE2 RB4 RB6 RB7 RB10 RB13 RB14 RB21 RB22 S3 S41 S42 S5 S7 S9 U1 U2 U7 U9 M M19, M21, M27, M29, M45, M46, M49, TXL, X9, X10, X21, X34, X49, 100, 101, 110, 123, 128, 200, 204, 245, 249, 309, 310
110	RE1 RE2 RB7 RB14 RB21 RB22 S3 S5 S7 S9 U1 U2 U3 U7 U9 M M11, M19, M29, M45, M46, M49, X9, X10, X34, 100, 101, 109, 115, 186, 200, 204, 245, 249, 285, 310, 623
112	S1 S25 S26 S7 M M11, M48, M77, M82, M85, X10, X11, X83, 101, 115, 118, 184, 186, 188, 277, 284, 285, 312, 622, 623, 710, 711
114	RE1 RB7 RB21 RB22 RB33 S1 S7 118, 218, 316, 318, 620, F10
115	S1 S41 S42 S46 U3 U7 M M48, X10, X11, X83, 101, 104, 110, 112, 118, 249, 285, 310, 622, 623
118	RE1 RB7 RB21 RB22 RB33 S1 S7 U3 92, 96, M M48, X1, X10, X11, 101, 112, 114, 115, 218, 285, 316, 318, 601, 602, 619, 620, 622, 623, 690, 694, 699, 715
120	DB RB1 RE2 RB3 RB4 RB5 RB7 RB10 RB14 RB21 RB22 S1 S26 S3 S41 S42 S5 S7 S9 U55 U6 U8 U9 M M5, M8, M10, M13, 50, M M21, M27, M41, M85, TXL, X21, X33, 106, 122, 123, 124, 125, 128, 142, 147, 220, 221, 222, 245, 247, 320, 322, 327
122	S1 S26 U6 U8 M M1, M M21, X21, X33, 120, 124, 125, 128, 155, 220, 221, 222, 320, 322, 327
123	DB RB1 RE2 RB3 RB4 RB5 RB7 RB10 RB14 RB21 RB22 S3 S41 S42 S5 S7 S9 U55 U7 U9 M M5, M8, M10, M M21, M27, M41, M85, TXL, X9, X21, 101, 106, 109, 120, 139, 142, 147, 187, 245
124	S1 S25 S26 U6 U8 M M1, 50, M M21, X21, X33, 107, 120, 122, 125, 133, 154, 220, 221, 222, 259, 322, 324
125	S1 S25 U6 U8 U9 M M13, 50, M M21, X21, X33, 120, 122, 124, 128, 133, 150, 220, 221, 222, 250, 255, 322, 327
128	TXL, U6 U8 U9 M M13, 50, M M21, TXL, X9, X21, 109, 120, 122, 125, 221, 250, 255, 327
130	DB RE2 RB4 RB6 RB10 RB13 RB14 S3 S9 U2 U7 M M32, M37, M45, X33, X36, 131, 134, 135, 136, 137, 236, 237, 337, 638, 671
131	U2 M M32, M37, M45, M49, X49, 130, 134, 135, 136, 137, 236, 237, 638
133	S25 U6 U7 X33, X36, 124, 125, 139, 220, 222, 236, 324
134	DB RE2 RB4 RB6 RB10 RB13 RB14 S3 S9 U7 M M32, M37, M45, M49, X33, X34, X36, X49, 130, 131, 135, 136, 137, 234, 236, 237, 334, 337, 638, 671, 697, F10
135	DB RE2 RB4 RB6 RB10 RB13 RB14 S3 S9 U7 M M32, M37, M45, M49, X33, X34, X36, X49, 130, 131, 134, 136, 137, 234, 236, 237, 337, 338, 638, 671, 697, F10
136	DB RE2 RB4 RB6 RB10 RB13 RB14 RB20 RB55 S25 S3 S9 U7 M M32, M37, M45, M49, X33, X34, X36, X49, 130, 131, 134, 135, 137, 139, 236, 237, 337, 638, 651, 671, 807, 808, 809, 811, 824
137	DB RE2 RB4 RB6 RB10 RB13 RB14 S3 S9 U7 M M32, M37, M45, M49, X33, X36, X48, 130, 131, 134, 135, 136, 236, 237, 337, 638, 671
139	S41 S42 S46 U2 U7 M M45, M49, X33, X34, X36, X49, 123, 133, 136, 218, 236
140	DB RB1 RB7 RB14 S3 S41 S42 S45 S46 S5 S7 S9 U1 U3 U6 U7 U8 M M19, M29, M41, M46, 104, 142, 147, 165, 184, 240, 246, 248, 265, 347
142	DB RB1 RE2 RB3 RB4 RB5 RB7 RB10 RB14 RB21 RB22 S3 S5 S7 S9 U2 U5 U55 U6 U8 U9 M M1, M2, M4, M5, M6, M8, M10, 12, M M41, M85, TXL, 120, 123, 140, 147, 200, 221, 240, 245, 247, 248, 327, 347
147	DB RB1 RE2 RB3 RB4 RB5 RB7 RB10 RB14 RB21 RB22 S1 S2 S25 S26 S3 S5 S7 S9 U2 U55 U6 M M1, M5, M8, M10, 12, M M41, M48, M85, TXL, 100, 120, 123, 140, 142, 165, 200, 240, 245, 248, 265, 347
150	S1 S2 S25 S26 S8 U8 U9 M M1, M13, 50, 125, 128, 154, 155, 158, 250, 255, 259, 327, 350, 353, 891, 893
154	RB12 RB24 S2 S7 S75 S8 U5 M M4, M5, M6, M8, M17, 18, 50, X54, X69, 108, 124, 150, 158, 169, 190, 191, 192, 197, 256, 259, 291, 294, 398, 893
155	S2 S8 S85 U2 M M1, 50, M M27, X54, 122, 150, 250, 255, 327
156	S41 S42 S8 S85 M M2, M4, M5, M6, M8, M13, 12, 27, X54, 158, 200, 240, 255, 259
158	S2 M M2, M13, 12, 27, X54, 150, 154, 156, 255, 259, 350, 353, 891, 893
160	RB24 S45 S46 S47 S8 S85 S9 M M17, 21, 37, 60, 67, M M11, X11, 162, 163, 164, 166, 260, 265
161	RE1 S3 61, 87, 88, 418, 420, 424, 428, 429, 436, 950
162	S45 S46 S8 S85 S9 U7 27, 61, 62, 63, 67, 68, X7, 160, 163, 164, 165, 171, 172, 260, 271, 371, 372, 373, 744
163	RB7 RB14 RB22 RB24 S45 S46 S47 S8 S85 S9 M M17, 21, 37, 60, 61, 63, 67, 68, M M11, X11, 160, 162, 164, 166, 171, 260, 263, 265, 363, 734, 735, 736, 738, 741, 742
164	SXF, RB7 RB14 RB22 S3 S45 S46 S8 S85 S9 27, 60, 61, 62, 63, 67, 68, X7, X69, 160, 162, 163, 165, 169, 171, 260, 269, 734, 735, 736, 738, 741, 742, 744
165	RB24 S41 S42 S45 S46 S47 S8 S85 S9 U1 U2 U3 U8 M M17, 21, 27, 37, 60, 61, 63, 67, 68, X69, 104, 140, 147, 160, 162, 164, 166, 169, 170, 194, 265, 269, 365, 377
166	RB24 S41 S42 S45 S46 S47 S8 S85 S9 U7 U8 M M17, 21, 37, 60, 67, M M11, M41, X11, 104, 160, 163, 165, 170, 171, 194, 265, 377
168	68, 733
169	S3 U5 27, 60, 61, 62, 63, 67, 68, X69, 108, 154, 164, 165, 190, 269, 369, 398
170	S1 S2 S25 S26 S45 S46 S47 S8 S85 S9 U6 U7 U9 M M41, M44, M46, M76, M82, M85, X76, 165, 166, 171, 181, 184, 186, 187, 188, 246, 265, 277, 283, 284, 285, 365, 380, F11
171	SXF, RB7 RB14 RB22 S41 S42 S45 S46 S47 S9 U7 U8 M M11, M29, M41, M46, X7, X11, 104, 162, 163, 164, 166, 170, 172, 181, 194, 260, 271, 370, 371, 372, 373, 377, 734, 735, 736, 738, 741, 742, 744
172	S2 U7 M M11, M44, M76, X7, X11, X76, X83, 162, 171, 175, 179, 260, 271, 275, 371, 372, 373, 742, 743, 744
175	S2 M M76, X76, X83, 172, 275, 743
179	U6 M M11, M76, M77, X11, X76, 172, 181, 277
181	S1 S25 S26 U6 U7 U9 M M44, M46, M48, M76, M77, M82, M85, X76, X83, 170, 171, 179, 184, 186, 187, 277, 282, 283, 284, 380
184	DB RB3 RB4 RB5 RB10 S2 S25 S26 S41 S42 S45 S46 U6 M M11, M46, M76, M82, M85, X1, X10, X11, X76, X83, 106, 112, 140, 170, 181, 186, 187, 246, 248, 282, 283, 284, 380, 601, 602, 615, 620, 621, 624, 625, 629
186	S1 S25 S26 S7 U3 U9 M M11, M19, M29, M48, M76, M82, M85, X10, X11, X76, X83, 101, 110, 112, 115, 181, 184, 188, 246, 248, 249, 282, 283, 284, 285, 310, 349, 380
187	S1 S25 S26 S41 S42 S46 U1 U2 U3 U4 U7 U9 M M19, M27, M29, M46, M48, M76, M82, M85, TXL, X76, X83, 100, 101, 104, 106, 123, 170, 181, 184, 200, 204, 245, 246, 248, 282, 283, 284, 380
188	S1 U3 M M11, M48, M82, M85, X11, X83, 112, 170, 186, 282, 283, 284, 285, 380
190	S3 U5 X69, 108, 154, 169, 398
191	S5 S7 U5 M M6, M8, 16, 18, X54, X69, 154, 192, 195, 197, 269, 291
192	S5 S7 S75 M M6, M8, M17, 16, 18, 27, 37, X54, 108, 154, 191, 194, 195, 291
194	RE1 RE2 RB7 RB12 RB14 RB24 RB25 S3 S41 S42 S5 S7 S75 S8 S85 S9 U5 U7 U8 M M8, M17, 18, 21, 27, 37, M M29, M41, 104, 108, 165, 166, 171, 192, 240, 265, 296, 347, 396
195	RB26 S5 S7 U5 M M6, 16, 18, 62, X54, X69, 191, 192, 197, 269, 291, 395, 398
197	RB12 RB24 RB25 RB26 S5 S7 S75 U5 M M4, M5, M6, M8, M17, 16, 18, 62, X54, X69, 154, 191, 195, 256, 269, 291, 294, 390, 395, 398, 399, 893, 901
200	RE1 RE2 RB3 RB4 RB5 RB7 RB10 RB14 RB21 RB22 S1 S2 S25 S26 S3 S5 S7 S9 U2 U5 U8 U9 M M2, M4, M5, M6, M8, M10, M M41, M45, M46, M48, M49, M85, TXL, X9, X10, X34, 100, 106, 109, 110, 142, 147, 156, 187, 204, 245, 249
204	DB RB1 RE2 RB3 RB4 RB5 RB7 RB10 RB14 RB21 RB22 S1 S2 S25 S26 S3 S41 S42 S45 S46 S5 S7 S9 U1 U2 U3 U7 U9 M M19, M29, M45, M46, M48, M49, M85, X9, X10, X34, 104, 106, 109, 110, 187, 200, 245, 249
218	RB1 RB7 RB21 RB22 RB33 S1 S3 S41 S42 S46 S7 S9 U2 M M49, X34, X49, 104, 114, 118, 139, 316, 318, 349, 620, F10
220	S1 S25 S26 U6 U8 M M21, X33, 120, 122, 124, 125, 133, 221, 222, 322, 326, 806, 809
221	S1 S25 S26 U6 U8 U9 M M13, 50, M M21, X21, X33, 106, 120, 122, 124, 125, 128, 142, 220, 222, 247, 322, 327
222	S1 S25 S26 U6 M M21, X21, X33, 120, 122, 124, 125, 133, 220, 221, 322, 324
234	X34, 134, 135, 697, F10
236	DB RE2 RB4 RB6 RB10 RB13 RB14 S3 S9 U7 M M32, M37, M45, M49, X33, X34, X36, X49, 130, 131, 133, 134, 135, 136, 137, 139, 237, 337, 638, 671
237	DB RE2 RB4 RB6 S3 S9 U7 M M32, M37, M45, X33, X36, X49, 130, 131, 134, 135, 136, 137, 236, 337, 638, 671
240	DB RB1 RB7 RB12 RB14 RB24 RB25 RB26 S3 S41 S42 S5 S7 S75 S8 S85 S9 U5 M M10, M13, 16, 21, 37, 108, 140, 142, 147, 156, 194, 248, 256, 296, 347, 396

Linie	Umsteigemöglichkeiten
245	DB RE1 RE2 RE3 RE4 RE5 RE7 RB10 RB14 RB21 RB22 S3 S5 S7 S9 U2 U55 U9 M M5, M8, M10, M27, M41, M45, M46, M49, M85, TXL, X9, X10, X34, 100, 101, 106, 109, 110, 120, 123, 142, 147, 187, 200, 204, 249
246	S2 S25 S26 S41 S42 S45 S46 S47 U6 U8 U9 M M44, M46, M48, M76, M85, X76, 140, 170, 184, 186, 187, 277, 370, 377
247	DB RE3 RE5 RE6 RE66 RB27 S1 S2 S25 S26 S41 S42 U6 U8 U9 M M8, M10, 12, M27, 120, 142, 221, 327
248	DB RE1 RE2 RE3 RE4 RE5 RE7 RB10 RB14 S1 S2 S25 S26 S3 S41 S42 S45 S46 S5 S7 S9 U1 U2 U3 U4 U5 U6 U7 U8 U9 M M2, M4, M5, M6, M10, M13, M29, M41, M46, M48, M85, TXL, 101, 104, 106, 140, 142, 147, 184, 186, 187, 240, 265, 282, 347
249	RE1 RE2 RE7 RB14 RB21 RB22 S3 S41 S42 S46 S5 S7 S9 U1 U2 U3 U7 U9 M M19, M29, M45, M46, M49, X9, X10, X34, 100, 101, 104, 109, 110, 115, 186, 200, 204, 245, 310
250	S1 S2 S25 S26 S3 S85 U2 U8 M M1, 50, M27, X54, 107, 125, 128, 150, 155, 255, 327
255	S1 S2 S25 S26 S3 S85 U2 U8 U9 M M1, M2, M4, M13, 12, 27, 50, M27, X54, 125, 128, 150, 155, 156, 158, 250, 259
256	RB12 RB24 RB25 RB26 S5 S7 S75 U5 M M4, M5, M8, M17, 21, 27, 37, X54, 154, 197, 240, 294, 893
259	S2 M M4, M13, 12, 27, 50, X54, 124, 150, 154, 156, 158, 255, 353, 891, 892, 893, 895, 899, 900, 901
260	S45 S46 S3 S85 S9 U7 61, 63, X7, 160, 162, 163, 164, 171, 172, 271, 371, 372, 373, 741, 742, 744
263	S46 S3 S85 68, 163, 363, 731, 734, 735, 736, 738, 741
265	RB24 S41 S42 S45 S46 S47 S3 S85 S9 U1 U2 U3 U6 U8 M M17, 21, 37, 60, 67, M11, M41, M48, X11, 104, 140, 147, 160, 163, 165, 166, 170, 194, 248, 365
269	S3 S5 U5 60, 61, 62, 63, 68, X69, 108, 164, 165, 169, 191, 195, 197, 291, 398, 399
271	U7 X7, 162, 171, 172, 260, 371, 372, 373, 744
275	S2 M M76, 172, 175, 743
277	S2 S41 S42 S45 S46 S47 U6 U8 M M11, M44, M46, M76, M77, X11, X76, X83, 112, 179, 181, 246, 282, 283, 370, 377, 710, 711
282	S1 S2 S25 S26 U3 U6 U9 M M48, M76, M82, M85, X76, X83, 101, 181, 184, 186, 187, 188, 248, 277, 283, 284, 285, 380
283	S1 S2 S25 S26 U9 M M48, M77, M82, M85, X83, 170, 181, 186, 187, 188, 277, 282, 284, 285, 380
284	RE3 RE4 RE5 S1 S25 S26 U9 M M11, M48, M82, M85, X11, X83, 112, 170, 181, 184, 186, 187, 188, 282, 283, 285, 380
285	S1 U3 U9 M M11, M48, M82, M85, X10, X11, X83, 101, 110, 112, 115, 118, 170, 186, 188, 282, 283, 284, 380, 623
291	S5 S7 U5 M M6, M8, 16, 18, X54, X69, 154, 191, 192, 195, 197, 269
294	S75 M M4, M5, M17, 27, X54, 154, 197, 256, 893
296	RB12 RB24 RB25 RB26 S3 S5 S7 S75 U5 108, 194, 240, 396
309	RE1 RE7 RB14 RB21 RB22 S3 S5 S7 S9 U2 U7 M M45, M49, X34, X49, 109, 310
310	RE1 RE7 RB14 RB21 RB22 S3 S41 S42 S46 S5 S7 S9 U3 U7 M M19, M29, X10, X49, 101, 104, 109, 110, 115, 186, 249, 309
316	RE1 RE7 RB21 RB22 RB33 S1 S7 93, 114, 118, 218, 318, 620
318	RE1 RE7 RB21 RB22 RB33 S1 S7 114, 118, 218, 316, 620
320	U8 120, 122, 322
322	S1 S25 S26 U8 M M21, X33, 120, 122, 124, 125, 220, 221, 222, 320
324	124, 133, 222
326	S1 220, 806, 809
327	S1 S25 S26 U6 U8 U9 M M13, 50, 120, 122, 125, 128, 142, 150, 155, 221, 247, 250
334	X34, 134
337	RE2 RE4 RE6 RB10 RB13 RB14 S3 S9 U7 M M32, M37, M45, X33, X36, 130, 134, 135, 136, 137, 236, 237, 604, 638, 648, 651, 652, 653, 654, 655, 656, 671
341	S45 S46 S47 M M41
347	DB RE1 RE2 RE7 RB12 RB14 RB24 RB25 S3 S41 S42 S5 S7 S75 S3 S85 S9 U1 U3 U5 M M10, 104, 140, 142, 147, 194, 240, 248
349	S3 S7 S9 U2 M M19, M49, X34, X49, 104, 186, 218
350	RB27 S2 150, 158
353	S2 150, 158, 259, 891, 893
363	S46 S3 S85 68, 163, 263
365	S45 S46 S47 S3 S85 S9 M M17, 21, 27, 37, 60, 67, 165, 170, 265
369	169, 424, 428
370	S41 S42 S45 S46 S47 U7 U8 M M44, 171, 246, 277, 377
371	U7 X7, 162, 171, 172, 260, 271, 372, 373, 744
372	U7 X7, 162, 171, 172, 260, 271, 371, 373, 744
373	U7 M M11, X7, X11, 162, 171, 172, 260, 271, 371, 372, 744
377	S41 S42 S45 S46 S47 S3 S85 S9 U7 M M41, M44, 165, 166, 171, 246, 277, 370
380	S1 U9 M M11, M48, M82, M85, X11, X83, 170, 181, 184, 186, 187, 188, 282, 283, 284, 285
390	RB25 S7 M M8, 16, 197, 901
395	RB26 S5 M M6, 18, 62, 195, 197, 398, 941, 943
396	S3 S5 S7 S75 U5 M M17, 27, 37, 194, 240, 296
398	RB26 S5 U5 62, 63, X69, 108, 154, 169, 190, 195, 197, 269, 395
399	S5 197, 269
893	RB12 RB24 S2 S75 M M4, M5, M17, X54, 150, 154, 158, 197, 256, 259, 294, 353, 867, 868, 891, 899, 900, 901
F10	RE1 RE7 RB21 RB22 RB33 S1 S7 X34, 114, 118, 134, 135, 218, 234, 316, 318, 620, 697
F11	170
F12	62, 68
F21	68, 733
F23	F24
F24	F23
N1	M M10, M M19, M29, M41, M45, M46, M48, M49, N2 N3 N6 N8 N9 N10, N26, N65
N2	M M1, M4, M5, M10, M13, M M19, M27, M29, M41, M45, M46, M48, M49, N1 N3 N5 N6 N7 N8 N9 N10, N26, N40, N42, N50, N65
N3	M M11, M19, M29, M46, N1 N2 N7 N9 N10, N26, N42
N5	M M1, M2, M4, M5, M6, M10, M13, M17, M M48, N2 N8 N40, N42, N50, N56, N65, N69, N90, N91, N94, N95
N6	M M1, M10, M13, M M19, M21, M27, M29, M46, M76, M77, N1 N2 N7 N9 N20, N22, N24, N25, N26, N33, N40, N42, N79, N84
N7 (Mo-Fr)	✈ SXF, M M11, M19, M21, M27, M29, M32, M37, M41, M45, M46, M48, M49, N2 N3 N6 N8 N9 N10, N23, N30, N33, N34, N39, N42, N60, N79, N94
N7 (Sa-So)	✈ SXF, S9 U7 N60
N8	M M1, M4, M5, M10, M13, M M21, M27, M29, M44, M48, N1 N2 N5 N7 N9 N20, N24, N40, N42, N52, N53, N65, N79, N94
N9	M M13, M M19, M27, M29, M45, M46, M48, M49, M76, M82, M85, N1 N2 N3 N6 N7 N8 N10, N20, N26, N40, N42, N52, N81, N88
N10	S1 S41 S42 S7 S9 U1 U2 U3 U7 U9 M M19, M29, M45, M46, M48, M49, N1 N2 N3 N7 N9 N12, N16, N26, N42, N84
N12	S1 M M48, N10, N13, N16, N84
N13	S25 S7 N14, N15, N16, N17
N14	S7 N13, N15, N16, N17
N15	S7 N13, N14, N16, N17
N16	S1 S7 M M48, N10, N12, N13, N14, N15, N17, N84
N17	S7 N13, N14, N15, N16
N20	S1 S41 S42 S7 S9 U6 U8 U9 M M10, M13, M M21, M27, M41, N6 N8 N9 N22, N24, N25, N26, N40
N22	S1 S25 U6 N6 N20, N24, N25, N33
N23	U7 N7 N39
N24	S1 S25 U6 U8 M M21, N6 N8 N20, N22, N25, N33, N53
N25	S1 S25 U6 N6 N20, N22, N24, N33
N26	S41 S42 S7 S9 U1 U2 U3 U6 U9 M M13, M M19, M27, M29, M45, M46, M49, N1 N2 N3 N6 N9 N10, N20
N30	S9 U7 M M32, M37, M45, N7 N34
N33	S25 U6 U7 N6 N7 N22, N24, N25, N39
N34	S9 U7 M M32, M37, M45, M49, N7 N30, N35, N39
N35	N34
N39	U7 N7 N23, N33, N34
N40	S5 S7 S9 U6 U8 U9 M M1, M4, M5, M10, M13, M M27, M41, M48, N2 N5 N6 N8 N9 N20, N42, N65
N42	S1 S41 S42 S7 S9 U1 U2 U3 U5 U6 U7 U8 U9 M M1, M2, M4, M5, M M19, M29, M41, M46, M48, M49, N1 N2 N3 N5 N6 N7 N8 N9 N10, N40, N65

Linie	Umsteigemöglichkeiten
N50	S2 S5 S7 S75 S8 U2 U5 M1, M2, M4, M5, M6, M8, M13, M17, M27 N2 N5 N56, N58, N94
N52	S1 S25 U8 U9 M13, N8 N9 N53
N53	M1, M21, N8 N24, N52
N56	S75 U5 M4, M5, M8, M17, N5 N50, N94, N97
N58	S2 M2, N50
N60	S46 S8 S9 N7 N65, N68
N61	S8 N67
N62	S46 S8 N65, N67, N68, N69, N90
N65	S41 S42 S46 S47 S7 S8 S9 U1 U2 U5 U8 M1, M2, M4, M5, M17, M48 N1 N2 N5 N8 N40, N42, N60, N62, N67, N68, N69, N70, N79, N90, N94
N67	S8 S46 S47 S8 S9 M17, N61, N62, N65, N69, N90
N68	S46 S8 S9 N60, N62, N65
N69	S8 S5 U5 N5 N62, N65, N67, N90, N91, N95
N70	S46 S8 S9 M41, N65
N79	S41 S42 S46 S8 S9 U6 U7 U8 M41, M44, M46, M76, M77, N6 N7 N8 N65
N81	S1 S2 S25 U9 M11, M48, M76, M77, M82, N9 N84
N84	S1 S2 S25 S41 S42 S46 U6 M11, M46, M48, M76, M82, M85, N6 N10, N12, N16, N81, N88
N88	S1 S25 U9 M11, M48, M82, M85, N9 N84
N90	S8 S5 U5 N5 N62, N65, N67, N69, N91, N95
N91	S5 U5 M8, N5 N69, N90, N95
N94	S8 S41 S42 S5 S7 S75 S8 S9 U5 U7 U8 M41, N5 N7 N8 N50, N56, N65
N95	S5 U5 M6, N5 N69, N90, N91
N97	S7 M4, M8, N56