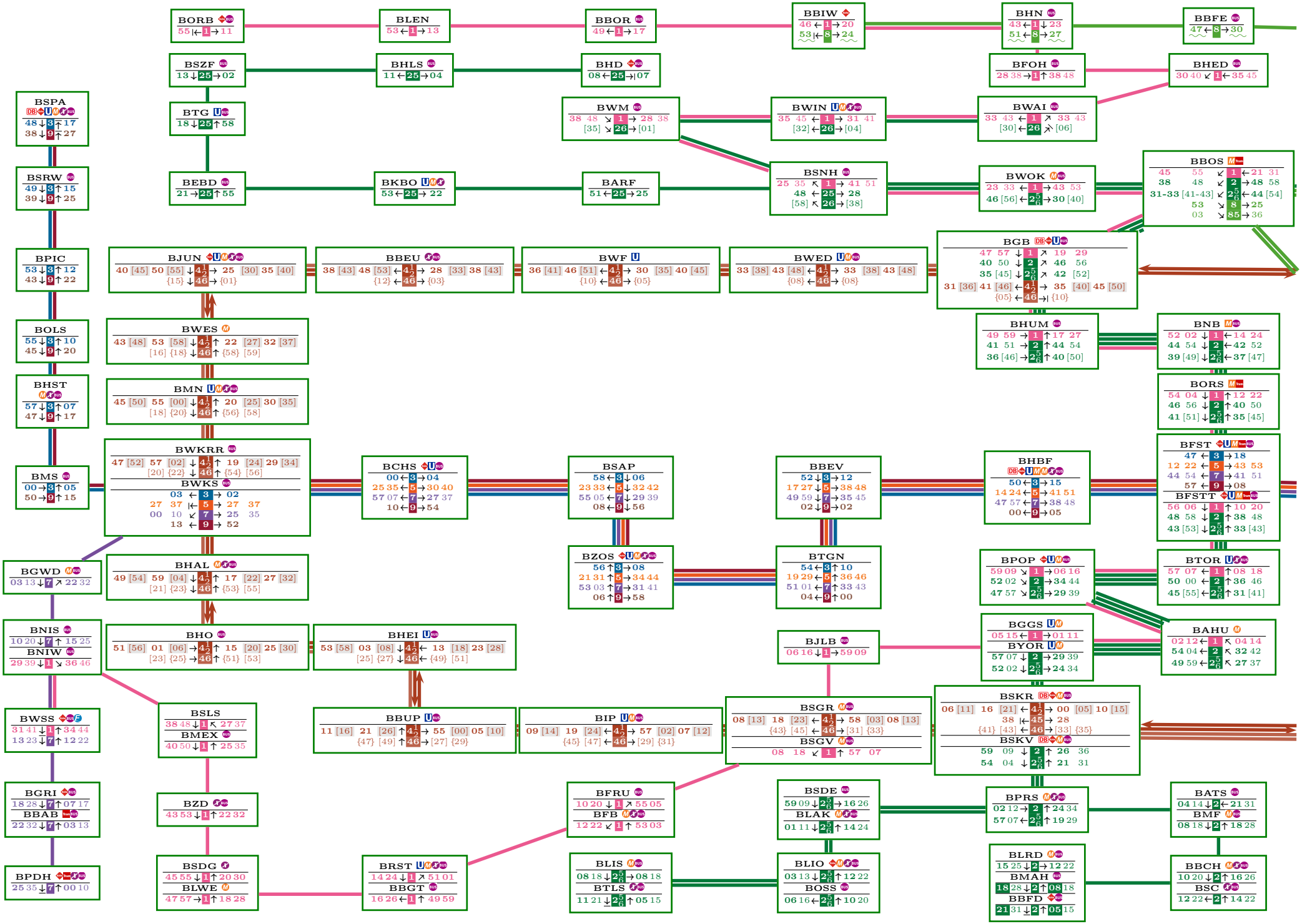
BORB
55 ← 1 → 11
BLEN
53 ← 1 → 13
BBOR
49 ← 1 → 17
BBIW
46 ← 1 → 20
53 ← 8 → 24
BHN
43 ← 1 ↓ 23
51 ← 8 → 27
BBFE
47 ← 8 → 30
BSZF
13 ↓ 25 → 02
BHLS
11 ← 25 → 04
BHD
08 ← 25 → 07
BFOH
28 38 → 1 ↑ 38 48
BHED
30 40 ↙ 1 ← 35 45
BSPA
48 ↓ 3 ↑ 17
38 ↓ 9 ↑ 27
BTG
18 ↓ 25 ↑ 58
BWM
38 48 ↘ 1 → 28 38
[35] ↘ 26 → [01]
BWIN
35 45 ← 1 → 31 41
[32] ← 26 → [04]
BWAI
33 43 ← 1 ↗ 33 43
[30] ← 26 ↗ [06]
BSRW
49 ↓ 3 ↑ 15
39 ↓ 9 ↑ 25
BEBD
21 → 25 ↑ 55
BKBO
53 ← 25 → 22
BARF
51 ← 25 → 25
BSNH
25 35 ↖ 1 → 41 51
48 ← 25 → 28
[58] ↖ 26 → [38]
BWOK
23 33 ← 1 → 43 53
46 [56] ← 2 5/6 → 30 [40]
BBOS
45 55 ↙ 1 ← 21 31
38 48 ↙ 2 → 48 58
31-33 [41-43] ↙ 2 5/6 → 44 [54]
53 ↘ 8 → 25
03 ↘ 85 → 36
BPIC
53 ↓ 3 ↑ 12
43 ↓ 9 ↑ 22
BJUN
40 [45] 50 [55] ↓ 4 1/2 → 25 [30] 35 [40]
{15} ↓ 46 → {01}
BBEU
38 [43] 48 [53] ← 4 1/2 → 28 [33] 38 [43]
{12} ← 46 → {03}
BWF
36 [41] 46 [51] ← 4 1/2 → 30 [35] 40 [45]
{10} ← 46 → {05}
BWED
33 [38] 43 [48] ← 4 1/2 → 33 [38] 43 [48]
{08} ← 46 → {08}
BGB
47 57 ↓ 1 ↗ 19 29
40 50 ↓ 2 ↗ 46 56
35 [45] ↓ 2 5/6 ↗ 42 [52]
31 [36] 41 [46] ← 4 1/2 → 35 [40] 45 [50]
{05} ← 46 → {10}
BOLS
55 ↓ 3 ↑ 10
45 ↓ 9 ↑ 20
BWES
43 [48] 53 [58] ↓ 4 1/2 ↑ 22 [27] 32 [37]
[16] {18} ↓ 46 ↑ {58} [59]
BHUM
49 59 → 1 ↑ 17 27
41 51 → 2 ↑ 44 54
36 [46] → 2 5/6 ↑ 40 [50]
BNB
52 02 ↓ 1 ← 14 24
44 54 ↓ 2 ← 42 52
39 [49] ↓ 2 5/6 ← 37 [47]
BHST
57 ↓ 3 ↑ 07
47 ↓ 9 ↑ 17
BMN
45 [50] 55 [00] ↓ 4 1/2 ↑ 20 [25] 30 [35]
[18] {20} ↓ 46 ↑ {56} [58]
BORS
54 04 ↓ 1 ↑ 12 22
46 56 ↓ 2 ↑ 40 50
41 [51] ↓ 2 5/6 ↑ 35 [45]
BWKRR
47 [52] 57 [02] ↓ 4 1/2 ↑ 19 [24] 29 [34]
[20] {22} ↓ 46 ↑ {54} [56]
BWKS
03 ← 3 → 02
27 37 ← 5 → 27 37
00 10 ↙ 7 → 25 35
13 ← 9 → 52
BCHS
00 ← 3 → 04
25 35 ← 5 → 30 40
57 07 ← 7 → 27 37
10 ← 9 → 54
BSAP
58 ← 3 ↓ 06
23 33 ← 5 ↓ 32 42
55 05 ← 7 ↓ 29 39
08 ← 9 ↓ 56
BBEV
52 ↓ 3 → 12
17 27 ↓ 5 → 38 48
49 59 ↓ 7 → 35 45
02 ↓ 9 → 02
BHBF
50 ← 3 → 15
14 24 ← 5 → 41 51
47 57 ← 7 → 38 48
00 ← 9 → 05
BFST
47 ← 3 → 18
12 22 ← 5 → 43 53
44 54 ← 7 → 41 51
57 ← 9 → 08
BFSTT
56 06 ↓ 1 ↑ 10 20
48 58 ↓ 2 ↑ 38 48
43 [53] ↓ 2 5/6 ↑ 33 [43]
BMS
00 → 3 ↑ 05
50 → 9 ↑ 15
BGWD
03 13 ↓ 7 ↗ 22 32
BHAL
49 [54] 59 [04] ↓ 4 1/2 ↑ 17 [22] 27 [32]
[21] {23} ↓ 46 ↑ {53} [55]
BZOS
56 ↑ 3 → 08
21 31 ↑ 5 → 34 44
53 03 ↑ 7 → 31 41
06 ↑ 9 → 58
BTGN
54 ← 3 ↑ 10
19 29 ← 5 ↑ 36 46
51 01 ← 7 ↑ 33 43
04 ← 9 ↑ 00
BPOP
59 09 ↘ 1 → 06 16
52 02 ↘ 2 → 34 44
47 57 ↘ 2 5/6 → 29 39
BTOR
57 07 ← 1 ↑ 08 18
50 00 ← 2 ↑ 36 46
45 [55] ← 2 5/6 ↑ 31 [41]
BNIS
10 20 ↓ 7 ↑ 15 25
BNIW
29 39 ↓ 1 ↘ 36 46
BHO
51 [56] 01 [06] → 4 1/2 ↑ 15 [20] 25 [30]
[23] {25} → 46 ↑ {51} [53]
BHEI
53 [58] 03 [08] ↓ 4 1/2 ← 13 [18] 23 [28]
[25] {27} ↓ 46 ← {49} [51]
BJLB
06 16 ↓ 1 → 59 09
BGGS
05 15 ← 1 → 01 11
BYOR
57 07 ↓ 2 → 29 39
52 02 ↓ 2 5/6 → 24 34
BAHU
02 12 ← 1 ↖ 04 14
54 04 ← 2 ↖ 32 42
49 59 ← 2 5/6 ↖ 27 37
BWSS
31 41 ↓ 1 ↑ 34 44
13 23 ↓ 7 ↑ 12 22
BSLS
38 48 ↓ 1 ↖ 27 37
BMEX
40 50 ↓ 1 ↑ 25 35
BBUP
11 [16] 21 [26] ↑ 4 1/2 → 55 [00] 05 [10]
{47} [49] ↑ 46 → [27] {29}
BIP
09 [14] 19 [24] ← 4 1/2 → 57 [02] 07 [12]
{45} [47] ← 46 → [29] {31}
BSGR
08 [13] 18 [23] ← 4 1/2 → 58 [03] 08 [13]
{43} [45] ← 46 → [31] {33}
BSGV
08 18 ↙ 1 ↑ 57 07
BSKR
06 [11] 16 [21] ← 4 1/2 → 00 [05] 10 [15]
38 ← 45 → 28
{41} [43] ← 46 → [33] {35}
BSKV
59 09 ↓ 2 ↑ 26 36
54 04 ↓ 2 5/6 ↑ 21 31
BGRI
18 28 ↓ 7 ↑ 07 17
BBAB
22 32 ↓ 7 ↑ 03 13
BZD
43 53 ↓ 1 ↑ 22 32
BFRU
10 20 ↓ 1 ↗ 55 05
BFB
12 22 ↙ 1 ↑ 53 03
BSDE
59 09 ↓ 2 5/6 → 16 26
BLAK
01 11 ↓ 2 5/6 ↑ 14 24
BPRS
02 12 → 2 ↑ 24 34
57 07 ← 2 5/6 ↑ 19 29
BATS
04 14 ↓ 2 ← 21 31
BMF
08 18 ↓ 2 ↑ 18 28
BPDH
25 35 ↓ 7 ↑ 00 10
BSDG
45 55 ↓ 1 ↑ 20 30
BLWE
47 57 → 1 ↑ 18 28
BRST
14 24 ↓ 1 ↗ 51 01
BBGT
16 26 ← 1 ↑ 49 59
BLIS
08 18 ↓ 2 5/6 → 08 18
BTLS
11 21 ↓ 2 5/6 ↑ 05 15
BLIO
03 13 ↓ 2 5/6 ↑ 12 22
BOSS
06 16 ← 2 5/6 ↑ 10 20
BLRD
15 25 ↓ 2 → 12 22
BMAH
18 28 ↓ 2 ↑ 08 18
BBFD
21 31 ↓ 2 ↑ 05 15
BBCH
10 20 ↓ 2 ↑ 16 26
BSC
12 22 ← 2 ↑ 14 22

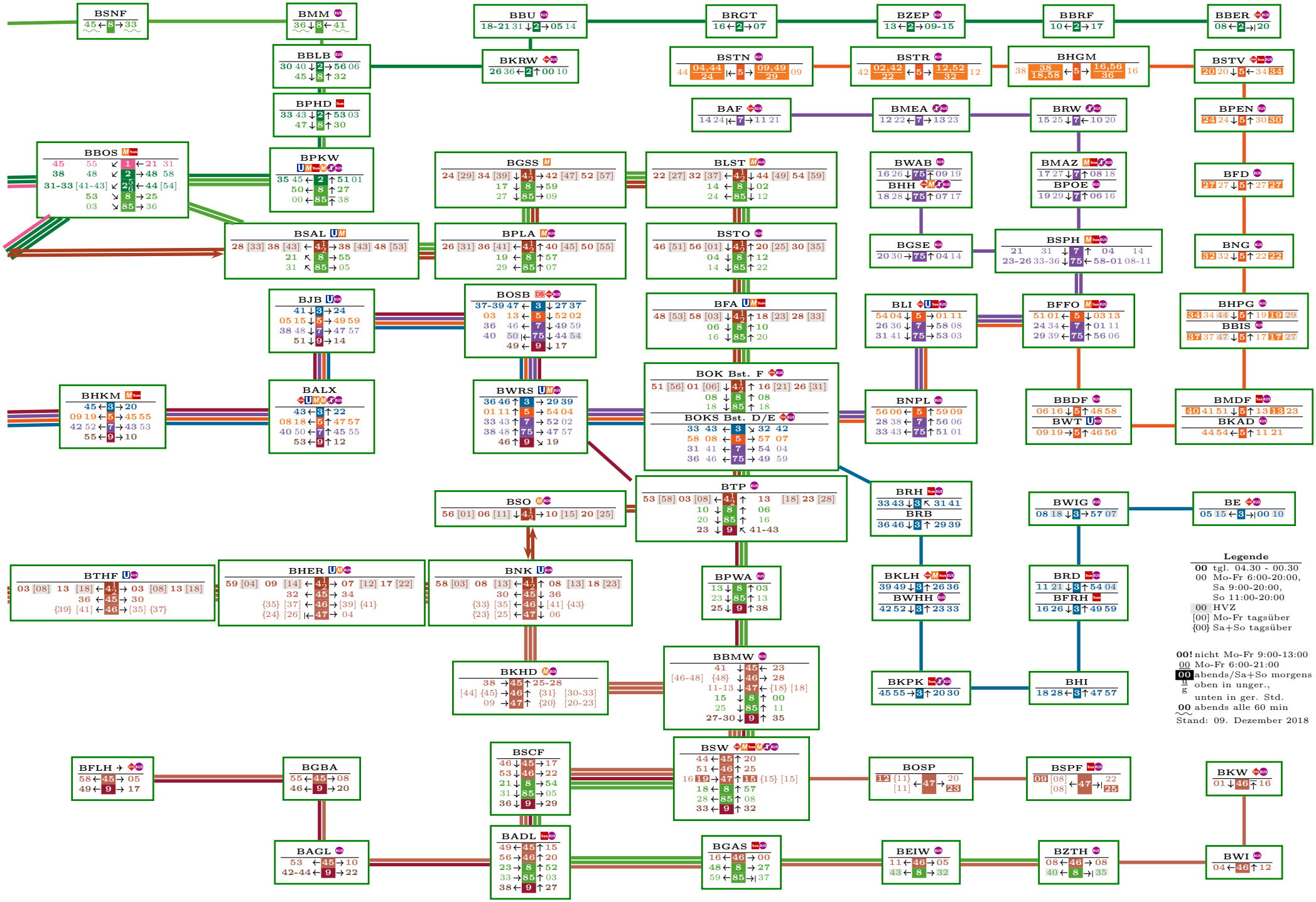

Legende

00	tgl. 04.30 - 00.30
00	Mo-Fr 6:00-20:00, Sa 9:00-20:00, So 11:00-20:00
00	HVZ
[00]	Mo-Fr tagsüber
{00}	Sa+So tagsüber

00! nicht Mo-Fr 9:00-13:00
00 Mo-Fr 6:00-21:00
00 abends/Sa+So morgens
oben in unger., unten in ger. Std.
00 abends alle 60 min

Stand: 09. Dezember 2018

S1 P (Mo-Fr)								
BWSS	00:14	00:34	00:54			04:14	20	23:54
BZD	00:23	00:43	01:03		04:03	04:23		00:03
BSGV	00:37	00:57	01:17	03:57	04:17	04:37		00:17
BNB	00:54	01:14	01:34	04:14	04:34	04:54		00:34
BGB	00:59	01:19	01:38	04:19	04:39	04:59		00:39
BSNH	01:05	01:24		04:25	04:45	05:05		00:45
BFOH	01:18			04:38	04:58	05:18		00:58
BORB				04:55	05:15	05:35		01:15

S1 P (Sa)						
BWSS	00:14	00:34	NV	04:54	20	23:54
BZD	00:23	00:43		05:03		00:03
BSGV	00:37	00:57		05:17		00:17
BNB	00:54	01:14		05:34		00:34
BGB	00:59	01:19		05:39		00:39
BSNH	01:05	01:25		05:45		00:45
BFOH	01:18	01:38		05:58		00:58
BORB	01:35	01:55		06:15		01:15

S1 P (So)										
BWSS	00:14	00:34	NV	06:54	20	20:34	20:54	21:14	20	23:54
BZD	00:23	00:43		07:03		20:43	21:03	21:23		00:03
BSGV	00:37	00:57		07:17		20:57	21:17	21:37		00:17
BNB	00:54	01:14		07:34		21:14	21:34	21:54		00:34
BGB	00:59	01:19		07:39		21:19	21:39	21:59		00:39
BSNH	01:05	01:25		07:45		21:25	21:45	22:05		00:45
BFOH	01:18	01:38		07:58		21:38	21:58	22:18		00:58
BORB	01:35	01:55		08:15		21:55	22:15	22:35		01:15

S1 P (Mo-Fr)								
BORB	00:11	00:31				04:11	20	23:51
BFOH	00:28	00:48			04:08	04:28		00:08
BGB	00:47	01:07		04:07	04:27	04:47		00:27
BPOP	00:59	01:19	03:59	04:19	04:39	04:59		00:39
BSGV	01:12	01:28	04:08	04:28	04:48	05:08		00:48
BZD	01:26		04:22	04:42	05:02	05:22		01:02
BWSS			04:31	04:51	05:11	05:31		01:11

S1 P (Sa)										
BORB	00:11	00:31	00:51	NV	04:11		04:41	05:11	20	23:51
BFOH	00:28	00:48	01:08		04:28		04:58	05:28		00:08
BGB	00:47	01:07	01:27		04:47	05:07	05:23	05:47		00:27
BPOP	01:09	01:19	01:39		04:59	05:19	05:39	05:59		00:39
BSGV	01:18		01:48		05:08	05:28	05:48	06:08		00:48
BZD	01:32		02:02		05:22	05:42	06:02	06:22		01:02
BWSS	01:41		02:11		05:31	05:51	06:11	06:31		01:11

S1 P (So)										
BORB	00:11	00:31	00:51	NV	06:11		06:41	07:11	20	23:51
BFOH	00:28	00:48	01:08		06:28		06:58	07:28		00:08
BGB	00:47	01:07	01:27		06:47	07:07	07:23	07:47		00:27
BPOP	01:09	01:19	01:39		06:59	07:19	07:39	07:59		00:39
BSGV	01:18		01:48		07:08	07:28	07:48	08:08		00:48
BZD	01:32		02:02		07:22	07:42	08:02	08:22		01:02
BWSS	01:41		02:11		07:31	07:51	08:11	08:31		01:11

S1 PI (Mo-Fr)				
BWSS		05:24	20	21:04
BZD	05:13	05:33		21:13
BGB	05:49	06:09		21:49
BWAI	06:03	06:23		22:03
BFOH	06:08	06:28		22:08

S1 PI (abends,So-Do)						
BWSS	21:24					
BZD	21:33	21:53	22:13	20	22:53	23:13
BGB	22:09	22:29	22:48		23:28	23:48
BWAI	22:23	22:43				
BFOH						

S1 PI (abends,Fr-Sa)						
BWSS	21:24					
BZD	21:33	20	22:13	20	22:53	23:13
BGB	22:09		22:49		23:29	23:48
BWAI	22:23		23:03		23:43	
BFOH	22:28		23:08			

S1 PI (Sa)				
BWSS		08:04	20	21:04
BZD	07:53	08:13		21:13
BGB	08:29	08:49		21:49
BWAI	08:43	09:03		22:03
BFOH	08:48	09:08		22:08

S1 PI (So)				
BWSS		09:44	20	21:04
BZD	09:33	09:53		21:13
BGB	10:09	10:29		21:49
BWAI	10:23	10:43		22:03
BFOH	10:28	10:48		22:08

S1 PI (Mo-Fr)						
BFOH				05:38	20	19:58
BWAI		05:03	20	05:43		20:03
BGB		05:17		05:57		20:17
BNB		05:22		06:02		20:22
BPOP	05:09	05:29		06:09		20:29
BZD	05:32	05:52		06:32		20:52
BWSS	05:41	06:01		06:41		21:01

S1 PI (abends, Mo-Do)								
BFOH	20	21:38						
BWAI		21:43						
BGB		21:57			22:57	23:17	20	23:57
BNB		22:02	20	22:42	23:02	23:22		00:02
BPOP		22:09		22:49	23:09	23:29		00:09
BZD		22:32		23:12	23:32	23:52		
BWSS				23:21	23:41	00:01		

S1 PI (abends,Fr)					
BFOH	20	22:18	22:38		
BWAI		22:23	22:43		
BGB		22:37	22:57		23:57
BNB		22:42	23:02	20	00:02
BPOP		22:49	23:09		00:09
BZD		23:12	23:32		
BWSS		23:21	23:41		

S1 PI (Sa)												
BFOH				08:18	20	19:58	20	22:18	22:38			
BWAI		07:43	20	08:23		20:03		22:23	22:43			
BGB		07:57		08:37		20:17		22:37	22:57			23:57
BNB		08:02		08:42		20:22		22:42	23:02	23:22	20	00:02
BPOP	07:49	08:09		08:49		20:29		22:49	23:09	23:29		00:09
BZD	08:12	08:32		09:12		20:52		23:12	23:32	23:52		
BWSS	08:21	08:41		09:21		21:01		23:21	23:41	00:01		

S1 PI (So)														
BFOH				09:58	20	19:58	20	21:38						
BWAI		09:23	20	10:03		20:03		21:43						
BGB		09:37		10:17		20:17		21:57			22:57	23:17	20	23:57
BNB		09:42		10:22		20:22		22:02	20	22:42	23:02	23:22		00:02
BPOP	09:29	09:49		10:29		20:29		22:09		22:49	23:09	23:29		00:09
BZD	09:52	10:12		10:52		20:52		22:32		23:12	23:32	23:52		
BWSS	10:01	10:21		11:01		21:01				23:21	23:41	00:01		

S2 W (Mo-Fr)																
BBFD	00:05	00:25			04:05	05:45			21:45	20	22:25	22:45	23:05	23:25	23:45	
BLRD	00:12	00:32			04:12	05:52	20	21:32	21:52		22:32	22:52	23:12	23:32	23:52	
BSKV	00:26	00:46		04:06	04:26	06:06		21:46	22:06		22:46	23:06	23:26	23:46	00:06	
BAHU	00:32	00:52		04:12	04:32	06:12		21:52	22:12		22:52	23:12	23:32	23:52	00:12	
BPOP	00:34	00:54		04:14	04:34	06:14		21:54	22:14		22:54	23:14	23:34	23:54	00:14	
BGB	00:49	01:09	04:06	04:26	04:46	06:26		22:06	22:26		23:06	23:26	23:46	00:06	00:26	
BBU	01:06	01:25	04:25	04:45	05:05	06:45		22:25	22:45		23:25	23:45	00:05	00:25	00:45	
BBER	01:16		04:40	05:00	05:20	07:00		22:40	23:00		23:40	00:00	00:20	00:40	01:00	

S2 W (Fr)					
BBFD				23:25	23:45
BLRD	21:52	20	22:32	23:32	23:52
BSKV	22:06		22:46	23:46	00:06
BAHU	22:12		22:52	23:52	00:12
BPOP	22:14		22:54	23:54	00:14
BGB	22:26		23:06	00:06	00:26
BBU	22:45		23:25	00:25	00:49
BBER	23:00		23:40	00:35	00:59

S2 W (Sa)												
BBFD	00:05	00:25	NV	04:45	20	08:25		22:45	23:05	23:25	23:45	
BLRD	00:12	00:32		04:52		08:32	20	22:52	23:12	23:32	23:52	
BSKV	00:26	00:46		05:06		08:46		23:06	23:26	23:46	00:06	
BAHU	00:32	00:52		05:12		08:52		23:12	23:32	23:52	00:12	
BPOP	00:34	00:54		05:14		08:54		23:14	23:34	23:54	00:14	
BGB	00:56	01:06		05:26		09:06		23:26	23:46	00:06	00:26	
BBU	01:15			05:45		09:25		23:45	00:05	00:25	00:49	
BBER	01:25			06:00		09:40		00:00	00:20	00:35	00:59	

S2 W (So)												
BBFD	00:05	00:25	NV	06:45	20	10:05		21:45	20	23:05	23:25	23:45
BLRD	00:12	00:32		06:52		10:12	20	21:52		23:12	23:32	23:52
BSKV	00:26	00:46		07:06		10:26		22:06		23:26	23:46	00:06
BAHU	00:32	00:52		07:12		10:32		22:12		23:32	23:52	00:12
BPOP	00:34	00:54		07:14		10:34		22:14		23:34	23:54	00:14
BGB	00:56	01:06		07:26		10:46		22:26		23:46	00:06	00:26
BBU	01:15			07:45		11:05		22:45		00:05	00:25	00:45
BBER	01:25			08:00		11:20		23:00		00:20	00:40	01:00

S2 W (Mo-Fr)																
BBER	00:08	00:28	00:48		04:08	04:28	20	20:08	20:28	20:48	20	21:28	21:48	20	23:28	23:48
BGB	00:40	01:00	01:20		04:40	05:00		20:40	21:00	21:20		22:00	22:20		00:00	00:20
BNB	00:44	01:04	01:24		04:44	05:04		20:44	21:04	21:24		22:04	22:24		00:04	00:24
BPOP	00:52	01:12	01:31	04:32	04:52	05:12		20:52	21:12	21:32		22:12	22:32		00:12	00:32
BSKV	00:59	01:19		04:39	04:59	05:19		20:59	21:19	21:39		22:19	22:39		00:19	00:39
BLRD	01:15			04:55	05:15	05:35		21:15	21:34	21:55		22:35	22:55		00:35	00:55
BBFD	01:21			05:01	05:21	05:41			21:41	22:01		22:41	23:01		00:41	01:01

S2 W (Fr)					
BBER	20:28	20	21:08	21:28	23:48
BGB	21:00		21:40	22:00	00:20
BNB	21:04		21:44	22:04	00:24
BPOP	21:12		21:52	22:12	00:32
BSKV	21:19		21:59	22:19	00:39
BLRD	21:35		22:15	22:34	00:57
BBFD				22:41	01:03

S2 W (Sa)																							
BBER	00:08	00:36	NV	03:33	04:03		04:33	05:03	05:28	20	07:08	20	19:28	19:48	20:08	20:28	20:48	21:08	21:28	21:48	20	23:28	23:48
BGB	00:40	01:04		04:07	04:40	05:00	05:17	05:40	06:00		07:40		20:00	20:20	20:40	21:00	21:20	21:40	22:00	22:20		00:00	00:20
BNB	00:44	01:09		04:12	04:44	05:04	05:22	05:44	06:04		07:44		20:04	20:24	20:44	21:04	21:24	21:44	22:04	22:24		00:04	00:24
BPOP	00:54	01:24		04:22	04:52	05:12	05:32	05:52	06:12		07:52		20:12	20:32	20:52	21:12	21:32	21:52	22:12	22:32		00:12	00:32
BSKV	01:02	01:32		04:29	04:59	05:19	05:39	05:59	06:19		07:59		20:19	20:39	20:59	21:19	21:39	21:59	22:19	22:39		00:19	00:39
BLRD	01:16	01:46		04:44	05:15	05:35	05:55	06:15	06:35		08:15		20:35	20:55	21:15	21:35	21:55	22:15	22:34	22:55		00:35	00:57
BBFD	01:23	01:53		04:51	05:21	05:41	06:01	06:21	06:41		08:21								22:41	23:01		00:41	01:03

S2 W (So)																	
BBER	00:08	00:36	NV	05:33	06:03		06:33	07:03	07:28	20	08:48	20	20:08	20:28	20:48	20	23:28	23:48
BGB	00:40	01:04		06:07	06:40	07:00	07:17	07:40	08:00		09:20		20:40	21:00	21:20		00:00	00:20
BNB	00:44	01:09		06:12	06:44	07:04	07:22	07:44	08:04		09:24		20:44	21:04	21:24		00:04	00:24
BLRD	01:16	01:46		06:44	07:15	07:35	07:55	08:15	08:35		09:55		21:15	21:34	21:55		00:35	00:55
BBFD	01:23	01:53		06:51	07:21	07:41	08:01	08:21	08:41		10:01			21:41	22:01		00:41	01:01

S2 WI (Mo-Fr)									
BBFD					05:55	20	20:55	21:15	21:35
BLRD			05:02	20	06:02		21:02	21:22	21:42
BSKV			05:16		06:16		21:16	21:36	21:56
BAHU		05:02	05:22		06:22		21:22	21:42	
BPOP	04:44	05:04	05:24		06:24		21:24	21:44	
BBLB	05:06	05:26	05:46		06:46		21:46	22:05	
BBU	05:14	05:34	05:54		06:54		21:54		

S2 WI (Fr)					
BBFD	21:15	20	21:55	22:15	22:35
BLRD	21:22		22:02	22:22	22:42
BSKV	21:36		22:16	22:36	22:56
BAHU	21:42		22:22	22:42	
BPOP	21:44		22:24	22:44	
BBLB	22:06		22:46	23:05	
BBU	22:14		22:54		

S2 WI (Sa)								
BBFD				08:35	20	21:55	22:15	22:35
BLRD		07:42	20	08:42		22:02	22:22	22:42
BSKV		07:56		08:56		22:16	22:36	22:56
BAHU	07:42	08:02		09:02		22:22	22:42	
BPOP	07:44	08:04		09:04		22:24	22:44	
BBLB	08:06	08:26		09:26		22:46	23:05	
BBU	08:14	08:34		09:34		22:54		

S2 WI (So)							
BBFD			10:15	20	20:55	21:15	21:35
BLRD	09:22	20	10:22		21:02	21:22	21:42
BSKV	09:36		10:36		21:16	21:36	21:56
BAHU	09:42		10:42		21:22	21:42	
BPOP	09:44		10:44		21:24	21:44	
BBLB	10:06		11:06		21:46	22:05	
BBU	10:14		11:14		21:54		

S2 WI (Mo-Fr)										
BBU	04:31		05:11	20	20:31	20:51	20	21:31	21:51	
BBLB	04:40		05:20		20:40	21:00		21:40	22:00	22:20
BGB	04:50		05:30		20:50	21:10		21:50	22:10	22:30
BNB	04:54		05:34		20:54	21:14		21:54	22:14	22:34
BPOP	05:01		05:42		21:02	21:22		22:02		
BSKV		05:29	05:49		21:09	21:29		22:09		
BLRD		05:44	06:05		21:25	21:45		22:25		
BBFD		05:51	06:11		21:31					

S2 WI (Fr)						
BBU	20:51	20	21:31	20	22:31	22:51	
BBLB	21:00		21:40		22:40	23:00	23:20
BGB	21:10		21:50		22:50	23:10	23:30
BNB	21:14		21:54		22:54	23:14	23:34
BPOP	21:22		22:02		23:02		
BSKV	21:29		22:09		23:09		
BLRD	21:45		22:25		23:25		
BBFD	21:51		22:31				

S2 WI (Sa)								
BBU			08:11	20	21:31	20	22:31	22:51	
BBLB			08:20		21:40		22:40	23:00	23:20
BGB		08:10	08:30		21:50		22:50	23:10	23:30
BNB		08:14	08:34		21:54		22:54	23:14	23:34
BPOP		08:22	08:42		22:02		23:02		
BSKV	08:09	08:29	08:49		22:09		23:09		
BLRD	08:24	08:45	09:05		22:25		23:25		
BBFD	08:31	08:51	09:11		22:31				

S2 WI (So)									
BBU				10:11	20	20:31	21:31	21:51	
BBLB				10:20		20:40	21:40	22:00	22:20
BGB		09:50	20	10:30		20:50	21:50	22:10	22:30
BNB		09:54		10:34		20:54	21:54	22:14	22:34
BPOP		10:02		10:42		21:02	22:02		
BSKV	09:49	10:09		10:49		21:09	22:09		
BLRD	10:04	10:25		11:05		21:25	22:25		
BBFD	10:11	10:31		11:11		21:31			

S25 V (Mo-Fr)								
BTLS	00:05	00:25	00:45			04:05	20	23:45
BAHU	00:27	00:47	01:07		04:07	04:27		00:07
BPOP	00:29	00:49	01:09		04:09	04:29		00:09
BNB	00:37	00:57	01:17		04:17	04:37		00:17
BSNH	00:48	01:08			04:28	04:48		00:28
BTG	00:58	01:17			04:38	04:58		00:38
BHLS	01:04			04:34	04:44	05:04		00:44
BHD	01:07			04:37	04:47	05:07		00:47

S25 V (Sa)						
BTLS	00:05	00:25	00:44	NV	04:45	20	23:45
BAHU	00:27	00:47	01:07		05:07		00:07
BPOP	00:29	00:49	01:09		05:09		00:09
BNB	00:37	00:57			05:17		00:17
BSNH	00:48	01:08			05:28		00:28
BTG	00:58	01:18			05:38		00:38
BHLS	01:04	01:24			05:44		00:44
BHD	01:07	01:27			05:47		00:47

S25 V (So)								
BTLS	00:05	00:25	00:44	NV		06:25	20	23:45
BAHU	00:27	00:47	01:07			06:47		00:07
BPOP	00:29	00:49	01:09		06:39	06:49		00:09
BNB	00:37	00:57			06:47	06:57		00:17
BSNH	00:48	01:08			07:01	07:08		00:28
BTG	00:58	01:18				07:18		00:38
BHLS	01:04	01:24				07:24		00:44
BHD	01:07	01:27				07:27		00:47

S25 V (Mo-Fr)									
BHD	00:08	00:28	00:38				04:08	20	23:48
BHLS	00:11	00:31	00:41				04:11		23:51
BTG	00:18	00:38				04:08	04:18		23:58
BSNH	00:28	00:48				04:18	04:28		00:08
BNB	00:39	00:59			04:19	04:29	04:39		00:19
BPOP	00:47	01:07			04:27	04:36	04:47		00:27
BLIS	01:08	01:27		04:37	04:48		05:08		00:48
BTLS	01:11			04:41	04:51		05:11		00:51

S25 V (Sa)									
BHD	00:08	20	00:48	NV		05:08	20	23:28	23:48
BHLS	00:11		00:51			05:11		23:31	23:51
BTG	00:18		00:58			05:18		23:38	23:58
BSNH	00:28		01:08			05:28		23:48	00:08
BNB	00:39		01:19			05:39		23:59	00:19
BPOP	00:47		01:27		05:27	05:47		00:07	00:27
BLIS	01:08		01:48		05:48	06:08		00:28	00:47
BTLS	01:11		01:51		05:51	06:11		00:31	00:51

S25 V (So)								
BHD	00:08	20	00:48	NV		07:08	20	23:48
BHLS	00:11		00:51			07:11		23:51
BTG	00:18		00:58			07:18		23:58
BSNH	00:28		01:08		07:08	07:28		00:08
BNB	00:39		01:19		07:19	07:39		00:19
BPOP	00:47		01:27		07:27	07:47		00:27
BLIS	01:08		01:48		07:48	08:08		00:48
BTLS	01:11		01:51		07:51	08:11		00:51

S26 VI (Mo-Fr)										
BTLS			05:35	20	19:35	19:55	20	20:35	20	21:15
BLIS		05:18	05:38		19:38	19:58		20:38		21:18
BPOP		05:39	05:59		19:59	20:19		20:59		
BNB	05:27	05:47	06:07		20:07	20:27				
BWAI	05:46	06:06	06:26		20:26					

S26 VI (Sa)						
BTLS	08:15	20	19:35	19:55	20	20:35
BLIS	08:18		19:38	19:58		20:38
BPOP	08:39		19:59	20:19		
BNB			20:07	20:27		
BWAI						

S26 VI (So)					
BTLS	11:15	20	19:55	20	20:35
BLIS	11:18		19:58		20:38
BPOP	11:39		20:19		
BNB					
BWAI					

S26 VI (Mo-Fr)							
BWAI				05:50	20	20:10	20:30
BNB		05:09	20	06:09		20:29	20:49
BPOP		05:17		06:17		20:37	
BLIS	05:18	05:38		06:38		20:58	
BTLS	05:21	05:41		06:41		21:01	

S26 VI (Sa)						
BWAI						
BNB			08:09	08:29		
BPOP			08:17	08:37	20	19:57
BLIS	07:58	20	08:38	08:58		20:18
BTLS	08:01		08:41	09:01		20:21

S26 VI (So)						
BWAI						
BNB			11:09	11:29		
BPOP			11:17	11:37	20	19:57
BLIS	10:58	20	11:38	11:58		20:18
BTLS	11:01		11:41	12:01		20:21

S3 B (Mo-Fr)							(abends)		
BE	00:05	00:25		03:45	04:05	20	22:45	23:05	23:25	23:45
BKPK	00:20	00:40	03:40	04:00	04:20		23:00	23:20	23:40	00:00
BOSB	00:39	00:57	03:59	04:19	04:39		23:19	23:39	23:59	00:19
BCHS	01:00		04:20	04:40	05:00		23:40	00:00	00:20	00:40
BWKS	01:03		04:23	04:43	05:03		23:43	00:02	00:23	00:43
BSPA	|		|	|	05:17		23:57		|	|
BGWD	01:05		04:25	04:45					00:25	00:45

S3 B (Sa)							
BE	00:05	00:25	NV	04:25	20	06:05	20	22:45
BKPK	00:20	00:40		04:40		06:20		23:00
BOSB	00:39	00:57		04:59		06:39		23:19
BCHS	01:00			05:20		07:00		23:40
BWKS	01:03					07:03		23:43
BSPA	|					07:17		23:57
BGWD	01:05							

S3 B (So)							
BE	00:05	00:25	NV	06:25	20	08:05	20	22:45
BKPK	00:20	00:40		06:40		08:20		23:00
BOSB	00:39	00:57		06:59		08:39		23:19
BCHS	01:00			07:20		09:00		23:40
BWKS	01:03					09:03		23:43
BSPA	|					09:17		23:57
BGWD	01:05							

S3 B (Mo-Fr)									
BGWD		00:39		03:59	20	04:59			
BSPA		|		|		|	05:08	20	23:48
BWKS	00:22	00:42		04:02		05:02	05:22		00:02
BCHS	00:24	00:44		04:04		05:04	05:24		00:04
BOSB	00:47	01:07	04:07	04:27		05:27	05:47		00:27
BKPK	01:05	01:24	04:25	04:45		05:45	06:05		00:45
BE	01:20		04:40	05:00		06:00	06:20		01:00

S3 B (Sa)									
BGWD		00:39		04:59	05:19				
BSPA		|		|	|		07:08	20	23:48
BWKS	00:22	00:42		05:02	05:22		07:22		00:02
BCHS	00:24	00:44		05:04	05:24	20	07:24		00:04
BOSB	00:47	01:07	NV	05:27	05:47		07:47		00:27
BKPK	01:05	01:25		05:45	06:05		08:05		00:45
BE	01:20	01:40		06:00	06:20		08:20		01:00

S3 B (So)									
BGWD		00:39		06:59	07:19				
BSPA		|		|	|		09:08	20	23:48
BWKS	00:22	00:42		07:02	07:22		09:22		00:02
BCHS	00:24	00:44		07:04	07:24	20	09:24		00:04
BOSB	00:47	01:07	NV	07:27	07:47		09:47		00:27
BKPK	01:05	01:25		07:45	08:05		10:05		00:45
BE	01:20	01:40		08:00	08:20		10:20		01:00

S3 BI (Mo-Fr)										
BE	04:35	20	08:35		14:15	20	20:15			23:35
BFRH	04:46		08:46	20	14:26		20:26	20	23:26	23:46
BOSB	05:07		09:07		14:47		20:47		23:47	00:07

S3 BI (Sa)					
BE	06:35	20	07:35		
BFRH	06:46		07:46	20	23:26
BOSB	07:07		08:07		23:47

S3 BI (So)						
BE	08:35	20	09:35			23:35
BFRH	08:46		09:46	20	23:26	23:46
BOSB	09:07		10:07		23:47	00:07

S3 BI (Mo-Fr)											
BOSB	04:57	20	07:57	20	13:37	20	19:37	20	22:57	20	23:57
BFRH	05:19		08:19		13:59		19:59		23:19		00:19
BE	05:30		08:30		14:10		20:10		23:30		00:30

S3 BI (Sa)					
BOSB	07:17	20	22:57	20	23:57
BFRH	07:39		23:19		00:19
BE			23:30		00:30

S3 BI (So)					
BOSB	09:17	20	22:57	20	23:57
BFRH	09:39		23:19		00:19
BE			23:30		00:30

S41 A (Mo-Fr)																		
BSKR	00:06	00:16	00:26		00:36	00:46	00:56	01:08	01:16							04:16	10	23:56
BBUP	00:11	00:21	00:31		00:41	00:51	01:01	01:13	01:21						04:11	04:21		00:01
BWES	00:22	00:32	00:42		00:52	01:03	01:12	01:24					04:02	10	04:22	04:32		00:12
BGB	00:35	00:45	00:55		01:05	01:16		01:37			03:55	10	04:15		04:35	04:45		00:25
BGSS	00:42	00:52	01:02		01:12	01:22				03:52	04:02		04:22		04:42	04:52		00:32
BOK	00:51	01:01	01:10	01:15	01:20					04:01	04:11		04:31		04:51	05:01		00:41
BSKR	01:08	01:15		01:27						04:15	04:25		04:45		05:05	05:15		00:55

S41 A (Sa)						
BSKR	00:06	00:16	NV	05:16	10	23:56
BBUP	00:11	00:21		05:21		00:01
BWES	00:22	00:32		05:32		00:12
BGB	00:35	00:45		05:45		00:25
BGSS	00:42	00:52		05:52		00:32
BOK	00:51	01:01		06:01		00:41
BSKR	01:05	01:15		06:15		00:55

S41 A (So)						
BSKR	00:06	00:16	NV	06:06	10	23:56
BBUP	00:11	00:21		06:11		00:01
BWES	00:22	00:32		06:22		00:12
BGB	00:35	00:45		06:35		00:25
BGSS	00:42	00:52		06:42		00:32
BOK	00:51	01:01		06:51		00:41
BSKR	01:05	01:15		07:05		00:55

S42 R (Mo-Fr)																	
BSKR	00:00	10	00:20	00:30	10	00:50	01:00	01:10	01:20						04:00	10	23:50
BHER	00:07		00:27	00:37		00:57	01:07	01:17	01:26					03:57	04:07		23:57
BOK	00:16		00:36	00:46		01:06	01:16	01:26					03:56	04:06	04:16		00:06
BGSS	00:24		00:44	00:54		01:14	01:24	01:34				03:54	04:04	04:14	04:24		00:14
BGB	00:31		00:51	01:01		01:21	01:30					04:01	04:11	04:21	04:31		00:21
BWES	00:43		01:03	01:13		01:33					04:03	04:13	04:23	04:33	04:43		00:33
BHAL	00:49		01:09	01:19						03:58	04:09	04:19	04:29	04:39	04:49		00:39
BBUP	00:55		01:15	01:24						04:05	04:15	04:25	04:35	04:45	04:55		00:45
BSKR	01:00		01:20							04:10	04:20	04:30	04:40	04:50	05:00		00:50

S42 R (Sa)						
BSKR	00:00	00:10	NV	05:10	10	23:50
BHER	00:07	00:17		05:17		23:57
BOK	00:16	00:26		05:26		00:06
BGSS	00:24	00:34		05:34		00:14
BGB	00:31	00:41		05:41		00:21
BWES	00:43	00:53		05:53		00:33
BHAL	00:49	00:59		05:59		00:39
BBUP	00:55	01:05		06:05		00:45
BSKR	01:00	01:10		06:10		00:50

S42 R (So)						
BSKR	00:00	00:10	NV	06:40	10	23:50
BHER	00:07	00:17		06:47		23:57
BOK	00:16	00:26		06:56		00:06
BGSS	00:24	00:34		07:04		00:14
BGB	00:31	00:41		07:11		00:21
BWES	00:43	00:53		07:23		00:33
BHAL	00:49	00:59		07:29		00:39
BBUP	00:55	01:05		07:35		00:45
BSKR	01:00	01:10		07:40		00:55

S41 AI (Mo-Fr)																						
BSKR				05:21	10	09:41	10	10:11	10:21	10	10:41			13:31	10	19:41	10	20:01	10	20:21	20:31	20:41	21:01
BBUP		05:06	10	05:26		09:46		10:16	10:26		10:46		13:26	13:36		19:46		20:06		20:26	20:36	20:46	21:06
BWES	05:07	05:17		05:37		09:57		10:27	10:37		10:57	13:27	13:37	13:47		19:57		20:17		20:37	20:47	20:57	21:17
BGB	05:20	05:30		05:50		10:10		10:40	10:50		11:10	13:40	13:50	14:00		20:10		20:30		20:50	21:00		
BGSS	05:27	05:37		05:57		10:17		10:47				13:47	13:57	14:07		20:17		20:37		20:57	21:06		
BHER	05:44	05:54		06:14		10:34		11:04				14:04	14:14	14:24		20:34		20:54		21:14			
BTHF	05:48	05:58		06:18		10:38						14:08	14:18	14:28		20:38		20:58		21:18			
BSKR	05:50	06:00		06:20		10:40						14:10	14:20	14:30		20:40		21:00					

S42 RI (Mo-Fr)																			
BSKR						05:45		06:05	10	10:15	10:25					14:25	10	20:15	10	20:35
BTHF				05:28	10	05:48	10	06:08		10:18	10:28			13:48	10	14:28		20:18		20:38
BHER			05:22	05:32		05:52		06:12		10:22	10:32			13:52		14:32		20:22		20:42
BGSS		05:29	05:39	05:49		06:09		06:29		10:39	10:49		13:59	14:09		14:49		20:39		20:59
BGB		05:36	05:46	05:56		06:16		06:36		10:46	10:56	13:56	14:06	14:16		14:56		20:46		21:06
BWES	05:28	05:48	05:58	06:08		06:28		06:48		10:58	11:08	14:08	14:18	14:28		15:08		20:58		21:18
BBUP	05:40	06:00	06:10	06:20		06:40		07:00		11:10	11:19	14:20	14:30	14:40		15:20		21:10		21:30
BSKR	05:45	06:05	06:15	06:25		06:45		07:05		11:15		14:25	14:35	14:45		15:25		21:15		

S45 U (Mo-Fr)						
BGAS			04:51			
BFLH			|	05:05	20	23:45
BSW	04:22	04:42	05:00	05:20		00:00
BTHF	04:36	04:56	05:16	05:36		00:16
BSKR	04:38	04:58	05:18	05:38		00:18

S45 U (Sa)							
BGAS			04:51				
BFLH			|	05:05	05:25	20	23:45
BSW	04:31	04:52	05:00	05:20	05:40		00:00
BTHF	04:45	05:05	05:15	05:35	05:56		00:16
BSKR					05:58		00:18

S45 U (So)						
BGAS	06:21					
BFLH	|			07:05	20	23:45
BSW	06:30	06:52	07:02	07:20		00:00
BTHF	06:46	07:06	07:16	07:36		00:16
BSKR			07:18	07:38		00:18

S45 U (Mo-Fr)								
BSKR	00:08	00:28		04:48	20	23:08	23:28	23:48
BTHF	00:10	00:30		04:50		23:10	23:30	23:50
BSW	00:23	00:43	04:44	05:04		23:24	23:43	00:04
BFLH			04:58	05:18		23:38		|
BGAS								00:12

S45 U (Sa)										
BSKR	00:08	00:28				06:08	20	23:08	23:28	23:48
BTHF	00:10	00:30		04:50	20	06:10		23:10	23:30	23:50
BSW	00:23	00:43	04:34	05:04		06:24		23:24	23:43	00:04
BFLH			04:48	05:18		06:38		23:38		|
BGAS										00:12

S45 U (So)										
BSKR	00:08	00:28				07:28	20	23:08	23:28	23:48
BTHF	00:10	00:30		06:50	20	07:30		23:10	23:30	23:50
BSW	00:23	00:43	06:34	07:04		07:44		23:24	23:43	00:04
BFLH			06:48	07:18		07:58		23:38		|
BGAS										00:12

S46 D (Mo-Fr)												Mo	Fr	(D → AI)	
BKW	00:01	00:21	00:41	01:01		04:01	20	21:01	21:21	21:41	20	23:41	00:01	21:21		
BGAS	00:16	00:36	00:56	01:16	03:56	04:16		21:16	21:36	21:56		23:56	00:16	21:36	04:53	05:13
BTHF	00:41	00:58	01:18		04:21	04:41		21:41	22:01	22:21		00:21	00:39	22:01	05:18	05:38
BSKR	00:43				04:23	04:43		21:43	22:03	22:23		00:23	00:41	22:03	05:20	05:40
BWES					04:39	04:59		21:59	22:19	22:39		00:39		22:19		
BGB																

S46 D (Sa)											
BKW	00:01	00:21	NV	04:41	05:01	20	11:41	20	18:41	20	23:41
BGAS	00:16	00:36		04:56	05:16		11:56		18:56		23:56
BTHF	00:41	00:59		05:19	05:39		12:19		19:19		00:19
BSKR	00:43	01:01		05:21	05:41		12:21		19:21		00:21
BWES					05:57		12:38		19:38		00:37
BGB							12:50		19:50		

S46 D (So)										
BKW	00:01	00:21	NV	06:21	20	11:41	20	18:41	20	23:41
BGAS	00:16	00:36		06:36		11:56		18:56		23:56
BTHF	00:39	00:59		06:59		12:19		19:19		00:19
BSKR	00:41	01:01		07:01		12:21		19:21		00:21
BWES				07:17		12:38		19:38		00:37
BGB						12:50		19:50		

S46 D (Mo-Fr)													(Mo)		(Fr)			(RI → D)			
BGB																					
BWES	00:16	00:36			04:36	20	20:16	20:36	20:56	21:16	20	23:36	23:56	00:18	00:38	20:36	20:56	23:56				
BSKR	00:33	00:53			04:53		20:33	20:53	21:13	21:33		23:53	00:13	00:35	00:55	20:53	21:13	00:13	10:45	11:05	20:45	21:05
BTHF	00:35	00:55	03:55	20	04:55		20:35	20:55	21:15	21:35		23:55	00:15	00:37	00:57	20:55	21:15	00:15	10:48	11:08	20:48	21:08
BGAS	01:00	01:19	04:20		05:20		21:00	21:20	21:40	22:00		00:20	00:40	01:00	01:19	21:20	21:40	00:40	11:10	11:30	21:10	21:30
BKW	01:16		04:36		05:36		21:16	21:36	21:56	22:16		00:36	00:56	01:16		21:36	21:56	00:58				

S46 D (Sa)														
BGB										13:05	20	20:05		
BWES	00:16	00:36						05:58	20	13:18		20:18	20	23:58
BSKR	00:33	00:57	NV	04:27	04:57	05:15	20	06:15		13:35		20:35		00:15
BTHF	00:35	00:59		04:29	04:59	05:17		06:17		13:37		20:37		00:17
BGAS	01:00	01:22		05:00	05:22	05:40		06:40		14:00		21:00		00:40
BKW	01:16	01:38		05:16	05:38	05:56		06:56		14:16		21:16		00:56

S46 D (So)																	
BGB													13:05	20	20:05		
BWES	00:18	00:38									07:18	20	13:18		20:18	20	23:58
BSKR	00:35	00:57	NV	04:27	04:57	30	05:57	06:27	06:55	20	07:35		13:35		20:35		00:15
BTHF	00:35	00:59		04:29	04:59		05:59	06:29	06:57		07:37		13:37		20:37		00:17
BGAS	01:00	01:22		05:00	05:22		06:22	07:00	07:20		08:00		14:00		21:00		00:40
BKW	01:16	01:38		05:16	05:38		06:38	07:16	07:36		08:16		14:16		21:16		00:56

S47 K (Mo-Fr)												
	morgens								abends			
BSPF	00:09	20	01:09	04:09	20	04:49	05:08	20	20:28	20:49	20	23:49
BSW	00:15		01:15	04:15		04:55	05:15		20:35	20:55		23:55
BHER							05:26		20:46			

S47 K (Sa)							
BSPF	05:09	20	06:09	06:28	06:48	20	20:28
BSW	05:15		06:15	06:34	06:55		20:35
BHER					07:04		20:44

S47 K (So)							
BSPF	07:09	20	08:09	08:28	08:48	20	20:28
BSW	07:15		08:15	08:34	08:55		20:35
BHER					09:04		20:44

S47 K (Mo-Fr)												
	morgens								abends			
BHER							05:44	20	20:24			
BSW	00:19	20	01:19	04:19	20	05:39	05:56		20:36	20:59	20	23:59
BSPF	00:25		01:25	04:25		05:45	06:02		20:42	21:05		00:05

S47 K (Sa)					
BHER				07:24	20	20:24
BSW	05:19	20	07:19	07:36		20:36
BSPF	05:25		07:25	07:42		20:42

S47 K (So)						
BHER				09:24	20	20:24
BSW	07:19	20	09:19	09:36		20:36
BSPF	07:25		09:25	09:42		20:42

S5 E (Mo-Fr)									(abends)				
BSTN							04:09	20	20:29		21:09		
BSTV						04:00	04:20		20:40	20	21:20		
BMDF	00:01	00:21	00:41		04:01	04:21	04:41		21:01		21:41	20	23:41
BLI	00:14	00:34	00:54	03:54	04:14	04:34	04:54		21:14		21:54		23:54
BOSB	00:23	00:43	01:03	04:03	04:23	04:43	05:03		21:23		22:03		00:03
BWKS	00:47	01:07	01:27	04:27	04:47	05:07	05:27		21:47		22:27		00:27
BGWD	00:50	01:10											

S5 E (Sa)															
BSTN								05:09	20	05:49	40	09:09	20	19:09	40	20:29
BSTV								05:20		06:00	20	09:20		19:20	20	20:40
BMDF	00:01	00:21	00:42	NV	04:42	05:01	20	05:41		06:21		09:41		19:41		21:01
BLI	00:14	00:34	00:54		04:54	05:14		05:54		06:34		09:54		19:54		21:14
BOSB	00:23	00:42	01:07		05:02	05:22		06:02		06:42		10:02		20:02		21:22
BWKS	00:47				05:27	05:47		06:27		07:07		10:27		20:27		21:27
BGWD																

S5 E (So)															
BSTN								07:09	20	07:49	40	11:09	20	19:09	40	20:29
BSTV								07:20		08:00	20	11:20		19:20	20	20:40
BMDF	00:01	00:21	00:42	NV	06:42	07:01	20	07:41		08:21		11:41		19:41		21:01
BLI	00:14	00:34	00:54		06:54	07:14		07:54		08:34		11:54		19:54		21:14
BOSB	00:23	00:42	01:07		07:02	07:22		08:02		08:42		12:02		20:02		21:22
BWKS	00:47				07:27	07:47		08:27		09:07		12:27		20:27		21:27
BGWD																

S5 E (Mo-Fr)										(abends)			Fr
BGWD					04:04	04:24								
BWKS	00:07	00:27	00:37		04:07	04:27	20	19:07	20	19:47	20	23:27	23:47	23:47
BOSB	00:32	00:52	01:02		04:32	04:52		19:32		20:12		23:32	00:12	00:12
BLI	00:41	01:01	01:10	04:21	04:41	05:01		19:41		20:21		00:01	00:21	00:21
BMDF	00:52	01:13		04:33	04:53	05:13		19:53		20:33		00:12	00:32	00:33
BSTV		01:34		04:54	05:14	05:34		20:14		20:54				00:54
BSTN		01:44		05:04	05:24	05:44		20:24		21:04				01:04

S5 E (Sa)													
BGWD													
BWKS	00:07						05:07	20	07:47	20	17:47	20	19:47
BOSB	00:32	00:53	01:13	NV	04:52	20	05:32		08:12		18:12		20:12
BLI	00:41	01:05	01:22		05:01		05:41		08:21		18:21		20:21
BMDF	00:52	01:16	01:35		05:13		05:53		08:33		18:33		20:33
BSTV			01:55		05:34		06:14		08:54		18:54		20:54
BSTN			02:06		05:44		06:24	40	09:04		19:04	40	21:04

S5 E (So)													
BGWD													
BWKS	00:07						07:07	20	09:47	20	17:47	20	19:47
BOSB	00:32	00:53	01:13	NV	06:52	20	07:32		10:12		18:12		20:12
BLI	00:41	01:05	01:22		07:01		07:41		10:21		18:21		20:21
BMDF	00:52	01:16	01:35		07:13		07:53		10:33		18:33		20:33
BSTV			01:55		07:34		08:14		10:54		18:54		20:54
BSTN			02:06		07:44		08:24	40	11:04		19:04	40	21:04

S5 EI (Mo-Fr)													(abends)								Fr
BHPG						05:44	20	09:04		13:04	20	19:44									
BMDF			04:31	04:51	20	05:51		09:11	20	13:11		19:51	20:11	20:31	20:51	20	21:31	21:49	20	23:09	20:31
BLI	04:04	20	04:44	05:04		06:04		09:24		13:24		20:04	20:24	20:44	21:04		21:44	22:04		23:24	20:44
BWRS	04:10		04:50	05:11		06:11		09:31		13:31		20:11	20:30	20:50	21:10		21:50	22:10		23:30	20:50
BOSB				05:13		06:13		09:33		13:33		20:13									20:52
BWKS				05:37		06:37		09:57		13:57		20:37									

S5 EI (Sa)				
BHPG				
BMDF		06:11	20	19:51
BLI	06:04	06:24		20:04
BWRS	06:11	06:31		20:11
BOSB	06:13	06:33		20:13
BWKS	06:37	06:57		20:37

S5 EI (So)				
BHPG				
BMDF		08:11	20	19:51
BLI	08:04	08:24		20:04
BWRS	08:11	08:31		20:11
BOSB	08:13	08:33		20:13
BWKS	08:37	08:57		20:37

S5 EI (Mo-Fr)																
BWKS					05:17	20	07:57	08:17	20	11:37	11:57	20	18:37	18:57	20	19:57
BOSB					05:42		08:22	08:42		12:02	12:22		19:02	19:22		20:22
BWRS	04:24	04:44	05:04	20	05:44		08:24	08:44		12:04	12:24		19:04	19:24		20:24
BLI	04:31	04:51	05:11		05:51		08:31	08:51		12:11	12:31		19:11	19:31		20:31
BMDF	04:44	08:04	05:23		06:03		08:43	09:04		12:24	12:43		19:23	19:42		20:42
BHPG			05:29		06:09		08:49				12:49		19:29			

(abends)								
BWKS	20:17	20:37						
BOSB	20:42	21:02						
BWRS	20:44	21:04	21:24	21:44	20	23:04	23:22	23:42
BLI	20:51	21:11	21:31	21:51		23:11	23:28	23:48
BMDF	21:04	21:22	21:42	22:04		23:24		
BHPG								

S5 EI (Sa)						
BWKS		06:17	20	19:17	19:37	19:57
BOSB		06:42		19:42	20:02	20:22
BWRS	06:24	06:44		19:44	20:04	20:24
BLI	06:31	06:51		19:51	20:11	20:31
BMDF	06:44	07:04		20:04	20:22	20:42
BHPG						

S5 EI (So)						
BWKS		08:17	20	19:17	19:37	19:57
BOSB		08:42		19:42	20:02	20:22
BWRS	08:24	08:44		19:44	20:04	20:24
BLI	08:31	08:51		19:51	20:11	20:31
BMDF	08:44	09:04		20:04	20:22	20:42
BHPG						

S5 EIII							FS	(Sa)		(So)	
BSTN	00:09		21:49	40	23:09		23:49	04:12	04:49	06:12	06:49
BSTV	00:20	21:40	22:00	20	23:20	23:40	00:00	04:22	05:00	06:22	07:00
BMDF	00:40	22:00	22:20		23:40	00:00	00:20	04:41	05:20	06:41	07:20

S5 EIII (abends)						F-S	(Sa)	(So)
BMDF	00:53	20:53	21:13	20	00:13	00:33	01:17	01:17
BSTV	01:14	21:13	21:34		00:34	00:54	01:36	01:36
BSTN	01:25		21:44	40	00:44	01:04	01:46	01:46

S7 O (Mo-Fr)								
BAF	00:11	20	00:51			04:11	20	23:51
BLI	00:26		01:06		04:06	04:26		00:06
BCHS	00:57		01:37	04:17	04:37	04:57		00:37
BGWD	01:03		01:42	04:23	04:43	05:03		00:43
BPDH	01:25			04:45	05:05	05:25		01:05

S7 O (Sa)								
BAF	00:11	00:31	00:51	NV	04:23	04:51	20	23:51
BLI	00:26	00:46	01:08		04:39	05:06		00:06
BCHS	00:57	01:21	01:51		05:17	05:37		00:37
BGWD	01:03	01:33	02:03		05:23	05:43		00:43
BPDH	01:25	01:55	02:25		05:45	06:05		01:05

S7 O (So)								
BAF	00:11	00:31	00:51	NV	06:23	06:51	20	23:51
BLI	00:26	00:46	01:08		06:39	07:06		00:06
BCHS	00:57	01:21	01:51		07:17	07:37		00:37
BGWD	01:03	01:33	02:03		07:23	07:43		00:43
BPDH	01:25	01:55	02:25		07:45	08:05		01:05

S7 O (Mo-Fr)								
BPDH	00:00	00:20	00:40			04:00	20	23:40
BGWD	00:22	00:42	01:02		04:02	04:22		00:02
BOSB	00:49	01:09	01:29	04:09	04:29	04:49		00:29
BLI	00:58	01:18		04:18	04:38	04:58		00:38
BAF	01:14			04:34	04:54	05:14		00:54

S7 O (Sa)							
BPDH	00:00	00:20	NV	04:10	04:40	20	23:40
BGWD	00:22	00:42		04:32	05:02		00:02
BOSB	00:49	01:09		05:09	05:29		00:29
BLI	00:58	01:20		05:18	05:38		00:38
BAF	01:14	01:35		05:34	05:54		00:54

S7 O (So)							
BPDH	00:00	00:20	NV	06:10	06:40	20	23:40
BGWD	00:22	00:42		06:32	07:02		00:02
BOSB	00:49	01:09		07:09	07:29		00:29
BLI	00:58	01:20		07:18	07:38		00:38
BAF	01:14	01:35		07:34	07:54		00:54

S7 OI (Mo-Fr)													
BAF					05:01	20	20:01	20:21	20	22:01	20	22:41	23:01
BOSB				05:06	05:26		20:26	20:46		22:26		23:06	23:26
BCHS			05:07	05:27	05:47		20:47	21:07		22:47		23:27	23:47
BWKS			05:10	05:30	05:50		20:50	21:10		22:50		23:30	
BGWD			05:13	05:33	05:53		20:53	21:13		22:53		23:32	
BWSS	04:42	20	05:23	05:43	06:03		21:03	21:22		23:02			
BPDH	04:55		05:35	05:55	06:15		21:15						

S7 OI (Sa)													
BAF					07:01	20	20:01	20:21	20	22:01	20	22:41	23:01
BOSB				07:06	07:26		20:26	20:46		22:26		23:06	23:26
BCHS			07:07	07:27	07:47		20:47	21:07		22:47		23:27	23:47
BWKS			07:10	07:30	07:50		20:50	21:10		22:50		23:30	
BGWD			07:13	07:33	07:53		20:53	21:13		22:53		23:32	
BWSS	06:43	20	07:23	07:43	08:03		21:03	21:22		23:02			
BPDH	06:55		07:35	07:55	08:15		21:15						

S7 OI (So)										
BAF					09:01	20	20:01	20	20:41	21:01
BOSB				09:06	09:26		20:26		21:06	21:26
BCHS			09:07	09:27	09:47		20:47		21:27	21:47
BWKS			09:10	09:30	09:50		20:50		21:30	
BGWD			09:13	09:33	09:53		20:53		21:32	
BWSS	08:43	20	09:23	09:43	10:03		21:03			
BPDH	08:55		09:35	09:55	10:15		21:15			

S7 OI (Mo-Fr)										
BPDH				05:10	20	21:10	21:30			
BWSS			05:02	05:22		21:22	21:42			
BGWD	04:32	20	05:12	05:32		21:32				
BWKS	04:35		05:15	05:35		21:35	21:55	20	22:35	22:55
BOSB	04:59		05:39	05:59		21:59	22:19		22:59	23:19
BAF	05:24		06:04	06:24		22:24	22:44		23:24	

S7 OI (Sa)										
BPDH				07:10	20	21:10	21:30			
BWSS			07:02	07:22		21:22	21:42			
BGWD	06:32	20	07:12	07:32		21:32				
BWKS	06:35		07:15	07:35		21:35	21:55	20	22:35	22:55
BOSB	06:59		07:39	07:59		21:59	22:19		22:59	23:19
BAF	07:24		08:04	08:24		22:24	22:44		23:24	

S7 OI (So)									
BPDH				09:10	20	20:10	20:30	20	21:30
BWSS			09:02	09:22		20:22	20:42		21:42
BGWD	08:32	20	09:12	09:32		20:32	20:52		
BWKS	08:35		09:15	09:35		20:35	20:55		
BOSB	08:59		09:39	09:59		20:59	21:19		
BAF	09:24		10:04	10:24		21:24			

S75 T (Mo-Fr)							
BWAB	00:16	00:36	00:56		04:16	20	23:56
BHH	00:18	00:38	00:57	03:58	04:18		23:58
BLI	00:31	00:51		04:11	04:31		00:11
BOSB	00:40	01:00		04:20	04:40		00:20

S75 T (Sa)								
BWAB	00:16	20	00:56	01:16	NV	04:36	20	23:56
BHH	00:18		00:58	01:18		04:38		23:58
BLI	00:31		01:11	01:31		04:51		00:11
BOSB	00:40		01:20			05:00		00:20

S75 T (So)								
BWAB	00:16	20	00:56	01:16	NV	06:36	20	23:56
BHH	00:18		00:58	01:18		06:38		23:58
BLI	00:31		01:11	01:31		06:51		00:11
BOSB	00:40		01:20			07:00		00:20

S75 T (Mo-Fr)							
BOSB	00:04	00:24	00:44		04:04	20	23:44
BLI	00:13	00:33	00:53		04:13		23:53
BHH	00:27	00:47	01:06	04:07	04:27		00:07
BWAB	00:29	00:49		04:09	04:29		00:09

S75 T (Sa)							
BOSB	00:04	20	01:04		04:44	20	23:44
BLI	00:13		01:13	NV	04:53		23:53
BHH	00:27		01:27		05:07		00:07
BWAB	00:29		01:29		05:09		00:09

S75 T (So)							
BOSB	00:04	20	01:04		06:44	20	23:44
BLI	00:13		01:13	NV	06:53		23:53
BHH	00:27		01:27		07:07		00:07
BWAB	00:29		01:29		07:09		00:09

S75 TI (Mo-Fr)							
BWAB	05:06	20	08:06	20	13:46	20	20:46
BWRS	05:28		08:28		14:08		21:08
BOSB	05:30		08:30		14:10		21:10

S75 TI (Sa)				
BWAB	08:46	20	19:26	19:46
BWRS	09:08		19:48	20:08
BOSB			19:50	

S75 TI (So)			
BWAB	10:46	20	19:46
BWRS	11:08		20:08
BOSB			

S75 TI (Mo-Fr)									
BOSB			05:34	20	08:34		14:14	20	20:34
BWRS			05:37		08:37	20	14:17		20:37
BLI	05:03	20	05:43		08:43		14:23		20:43
BWAB	05:19		05:59		08:59		14:39		20:59

S75 TI (Sa)					
BOSB		08:34	08:54		
BWRS		08:37	08:57	20	19:37
BLI	08:23	08:43	09:03		19:43
BWAB	08:39	08:59	09:19		19:59

S75 TI (So)					
BOSB		10:34	10:54		
BWRS		10:37	10:57	20	19:37
BLI	10:23	10:43	11:03		19:43
BWAB	10:39	10:59	11:19		19:59

S8 N (Mo-Do)																	
BZTH						05:20	20*	09:00					15:00	20*	18:00	20*	19:40
BGAS	00:08	00:28	00:48	04:08	20*	05:28		09:08	20*	13:08	13:28	20*	15:08		18:08		19:48
BPKW	00:47	01:07	01:27	04:47		06:07		09:47		13:47	14:07		15:47		18:47		20:27
BBLB		01:12	01:32	04:52		06:12		09:52		13:52	14:12		15:52		18:52		20:32
BBIW				05:13		06:33		10:13		14:13	14:33		16:13		19:13		20:56

abends					
BZTH					
BGAS	20:08	20	20:48	20	23:48
BPKW	20:47		21:27		00:27
BBLB	20:52		21:32		00:32
BBIW	21:13		21:53	60	00:53

S8 N (Fr)				
BZTH	13:20	20*		
BGAS	13:28		20*	19:48
BPKW	14:07			20:27
BBLB	14:12			20:32
BBIW	14:33			20:56

S8 N (Sa)									
BZTH									
BGAS	00:08	00:28	NV	04:18	04:48	20	06:48	20*	19:48
BPKW	00:47	01:07		04:57	05:27		07:27		20:27
BBLB	00:52	01:12		05:02	05:32		07:32		20:32
BBIW				05:23	05:53	60	07:53		20:56

S8 N (So)													
BZTH													
BGAS	00:08	00:28	NV	04:18	04:48	30	06:48	20	07:48	20	08:28	20*	19:48
BPKW	00:47	01:07		04:57	05:27		07:27		08:27		09:07		20:27
BBLB	00:52	01:12		05:02	05:32		07:32		08:32		09:12		20:32
BBIW				05:23	05:53	60	07:53	60*	08:56		09:33		20:56

*: Die Fahrten zur Minute 32 ab Blankenburg halten zwei Minuten später in Hohen Neuendorf und drei Minuten später in Birkenwerder (Sa/So nur in geraden Stunden).

S8 N (Mo-Do)																			
BBIW						04:24	20	07:44	20	11:44	12:04	20	13:44	20	16:44	20	18:24	20	20:24
BBLB	00:05	00:25		04:05	04:25	04:45		08:05		12:05	12:25		14:05		17:05		18:45		20:45
BPKW	00:10	00:30	00:50	04:10	04:30	04:50		08:10		12:10	12:30		14:10		17:10		18:50		20:50
BGAS	00:47	01:07	01:27	04:47	05:07	05:27		08:47		12:47	13:07		14:47		17:47		19:27		21:27
BZTH					05:15	05:35		08:55					14:55		17:55		19:35		

abends					
BBIW	20:44		21:24	60	23:24
BBLB	21:05	20	21:45	20	23:45
BPKW	21:10		21:50		23:50
BGAS	21:47		22:27		00:27
BZTH					

S8 N (Fr)				
BBIW	12:04	20	20	18:24
BBLB	12:25			18:45
BPKW	12:30			18:50
BGAS	13:07			19:27
BZTH	13:15			

S8 N (Sa)									
BBIW			00:37		04:24	60	07:24	20	20:24
BBLB	00:05	00:25	00:58		04:45	20	07:45		20:45
BPKW	00:10	00:30	01:03	NV	04:50		07:50		20:50
BGAS	00:47	01:07	01:40		05:27		08:27		21:27
BZTH									

S8 N (So)															
BBIW			00:37		04:34		05:37		06:24	60	08:24		09:04	20	20:24
BBLB	00:05	00:25	00:58		04:55	05:25	05:58	06:25	06:45	20	08:45	20	09:25		20:45
BPKW	00:10	00:30	01:03	NV	05:00	05:30	06:03	06:30	06:50		08:50		09:30		20:50
BGAS	00:47	01:07	01:40		05:37	06:07	06:40	07:07	07:27		09:27		10:07		21:27
BZTH															

S85 NI (Mo-Fr)					
BPKW	05:20	20	18:20	20	21:20
BSW	05:48		18:48		21:48
BGAS	05:57		18:57		

S85 NI (Sa)			
BPKW	08:00	20	21:20
BSW	08:28		21:48
BGAS			

S85 NI (So)			
BPKW	10:00	20	21:20
BSW	10:28		21:48
BGAS			

S85 NI (Mo-Fr)							
BGAS		04:59	20	19:19			
BSW	04:49	05:08		19:28	19:49	20	20:49
BPKW	05:18	05:38		19:58	20:18		21:18

S85 NI (Sa)				
BGAS	07:19	07:39		
BSW	07:29	07:49	20	20:49
BPKW	07:58	08:18		21:18

S85 NI (So)						
BGAS			09:59	10:19		
BSW	09:29	20	10:09	10:29	20	20:49
BPKW	09:58		10:38	10:58		21:18

S9 C (Mo-Fr)											Fr
BFLH	00:17	20	00:57	01:17			03:57	20	23:37	23:57	23:57
BSW	00:32		01:12	01:32		03:52	04:12		23:52	00:12	00:12
BLI	|		|	|	03:39	|	|		|	|	|
BOSB	00:49		01:29	01:48	03:49	04:09	04:29		00:09	00:29	00:29
BWKS	01:12		01:52		04:13	04:33	04:53		00:33	00:53	00:53
BSPA					04:27	04:47	05:07		00:47	01:07	01:09

S9 C (Sa)								
BFLH	00:17	00:37	NV	04:32	04:57	20	23:37	23:57
BSW	00:32	00:52		04:48	05:12		23:52	00:12
BLI	|	|		|	|		|	|
BOSB	00:49	01:09		05:08	05:29		00:09	00:29
BWKS	01:13	01:40		05:32	05:53		00:33	00:53
BSPA	01:27	01:54		05:46	06:07		00:47	01:09

S9 C (So)							
BFLH	00:17	00:37	NV	06:32	06:57	20	23:57
BSW	00:32	00:52		06:48	07:12		00:12
BLI	|	|		|	|		|
BOSB	00:49	01:09		07:08	07:29		00:29
BWKS	01:13	01:40		07:32	07:53		00:53
BSPA	01:27	01:54		07:46	08:07		01:07

S9 C (Mo-Fr)							
BSPA	00:18	00:38			03:58	20	23:58
BWKS	00:32	00:52	03:12	20	04:12		00:12
BSW	01:13	01:33	03:53		04:53		00:53
BFLH	01:29		04:09		05:09		01:09

S9 C (Sa)							
BSPA	00:18	00:38	NV	04:36	04:58	20	23:58
BWKS	00:32	00:52		04:50	05:12		00:12
BSW	01:20	01:50		05:33	05:53		00:53
BFLH	01:36	02:06		05:49	06:09		01:09

S9 C (So)													
BSPA	00:18	00:38	NV	03:36	04:06	30	05:06	05:36	06:06	06:36	06:58	20	23:58
BWKS	00:32	00:52		03:50	04:20		05:20	05:50	06:20	06:50	07:12		00:12
BSW	01:20	01:50		04:50	05:20		06:20	06:50	07:13	07:33	07:53		00:53
BFLH	01:36	02:06		05:09	05:36		06:36	07:09	07:29	07:49	08:09		01:09

U1 → Uhlandstraße (tagsüber)			(früh/abends)	(nachts)
WA	S U3 M BUS BUS	06 16 26 36 46 56	07 17 27 37 47 57	07 22 37 52
S	U3 BUS BUS	08 18 28 38 48 58	09 19 29 39 49 59	09 24 39 54
Gr	U3 M	10 20 30 40 50 00	11 21 31 41 51 01	11 26 41 56
Kbo	U3 U8 BUS	12 22 32 42 52 02	12 22 32 42 52 02	13 28 43 58
Pr	U3 BUS	14 24 34 44 54 04	14 24 34 44 54 04	15 30 45 00
Ho	U3 U6 M BUS BUS	16 26 36 46 56 06	16 26 36 46 56 06	17 32 47 02
Mo	U3 U7	17 27 37 47 57 07	18 28 38 48 58 08	18 33 48 03
Go	U2 U3	19 29 39 49 59 09	19 29 39 49 59 09	20 35 50 05
Kus	U3 M BUS	21 31 41 51 01 11	21 31 41 51 01 11	22 37 52 07
Nu	U2 U3 U4 M BUS BUS	22 32 42 52 02 12	23 33 43 53 03 13	23 38 53 08
Wt	U2 U3 M BUS	24 34 44 54 04 14	25 35 45 55 05 15	25 40 55 10
Kfo	U9 M X BUS BUS	26 36 46 56 06 16	27 37 47 57 07 17	27 42 57 12
U	M X BUS BUS	27 37 47 57 07 17	28 38 48 58 08 18	28 43 58 13

U1 → Warschauer Straße (tagsüber)			(früh/abends)	(nachts)
U	M X BUS BUS	00 10 20 30 40 50	00 10 20 30 40 50	02 17 32 47
Kfo	U9 M X BUS BUS	01 11 21 31 41 51	01 11 21 31 41 51	03 18 33 48
Wt	U2 U3 M BUS	02 12 22 32 42 52	02 12 22 32 42 52	04 19 34 49
Nm	U2 U3 U4 M BUS BUS	04 14 24 34 44 54	04 14 24 34 44 54	06 21 36 51
Kus	U3 M BUS	06 16 26 36 46 56	06 16 26 36 46 56	08 23 38 53
Go	U2 U3	08 18 28 38 48 58	08 18 28 38 48 58	10 25 40 55
Mo	U3 U7	09 19 29 39 49 59	09 19 29 39 49 59	11 26 41 56
Ho	U3 U6 M BUS BUS	11 21 31 41 51 01	11 21 31 41 51 01	13 28 43 58
Pr	U3 BUS	13 23 33 43 53 03	13 23 33 43 53 03	15 30 45 00
Kbo	U3 U8 BUS	15 25 35 45 55 05	15 25 35 45 55 05	19 34 49 04
Gr	U3 M	16 26 36 46 56 06	16 26 36 46 56 06	20 35 50 05
S	U3 BUS BUS	18 28 38 48 58 08	18 28 38 48 58 08	22 37 52 07
WA	S U3 M BUS BUS	20 30 40 50 00 10	20 30 40 50 00 10	24 39 54 09

U3 → Krumme Lanke (Mo-Fr tagsüber)			(Sa-So)	(früh/abends)	(nachts)
WA	S U1 M RUB RUB	03 09 13 19 23 29 33 39 43 49 53 59	01 11 21 31 41 51		
S	U1 RUB RUB	05 11 15 21 25 31 35 41 45 51 55 01	03 13 23 33 43 53		
Gr	U1 M	07 13 17 23 27 33 37 43 47 53 57 03	05 15 25 35 45 55		
Kbo	U1 U8 RUB	09 15 19 25 29 35 39 45 49 55 59 05	07 17 27 37 47 57		
Pr	U1 RUB	11 17 21 27 31 37 41 47 51 57 01 07	09 19 29 39 49 59		
Ho	U1 U6 M RUB RUB	13 19 23 29 33 39 43 49 53 59 03 09	11 21 31 41 51 01		
Mo	U1 U7	14 20 24 30 34 40 44 50 54 00 04 10	12 22 32 42 52 02		
Go	U1 U2	16 22 26 32 36 42 46 52 56 02 06 12	14 24 34 44 54 04		
Kus	U1 M RUB	18 24 28 34 38 44 48 54 58 04 08 14	16 26 36 46 56 06		
Nu	U1 U2 U4 M RUB RUB	19 25 29 35 39 45 49 55 59 05 09 15	17 27 37 47 57 07	08 18 28 38 48 58	12 27 42 57
Wt	U1 U2 M RUB	21 27 31 37 41 47 51 57 01 07 11 17	19 29 39 49 59 09	10 20 30 40 50 00	14 29 44 59
Au		23 29 33 39 43 49 53 59 03 09 13 19	21 31 41 51 01 11	12 22 32 42 52 02	16 31 46 01
Sno	U9 RUB	24 30 34 40 44 50 54 00 04 10 14 20	22 32 42 52 02 12	13 23 33 43 53 03	17 32 47 02
Hz	RUB	26 32 36 42 46 52 56 02 06 12 16 22	24 34 44 54 04 14	15 25 35 45 55 05	19 34 49 04
Fpo	U7 RUB RUB	28 34 38 44 48 54 58 04 08 14 18 24	26 36 46 56 06 16	17 27 37 47 57 07	20 35 50 05
Hb	S RUB	30 36 40 46 50 56 00 06 10 16 20 26	28 38 48 58 08 18	19 29 39 49 59 09	22 37 52 07
Rd	RUB	31 37 41 47 51 57 01 07 11 17 21 27	29 39 49 59 09 19	20 30 40 50 00 10	24 39 54 09
Bt	RUB	33 39 43 49 53 59 03 09 13 19 23 29	31 41 51 01 11 21	22 32 42 52 02 12	25 40 55 10
Po		34 40 44 50 54 00 04 10 14 20 24 30	32 42 52 02 12 22	23 33 43 53 03 13	27 42 57 12
Dd	M X	36 42 46 52 56 02 06 12 16 22 26 32	34 44 54 04 14 24	25 35 45 55 05 15	28 43 58 13
T	RUB	38 44 48 54 58 04 08 14 18 24 28 34	36 46 56 06 16 26	27 37 47 57 07 17	30 45 00 15
Os	X RUB RUB	39 45 49 55 59 05 09 15 19 25 29 35	37 47 57 07 17 27	28 38 48 58 08 18	32 47 02 17
Ot	RUB	41 47 51 57 01 07 11 17 21 27 31 37	39 49 59 09 19 29	30 40 50 00 10 20	34 49 04 19
K	X RUB	43 49 53 59 03 09 13 19 23 29 33 39	41 51 01 11 21 31	32 42 52 02 12 22	36 51 06 21

U3 → Warschauer Str. (Mo-Fr tagsüber)			(Sa-So)	(früh/abends)	(nachts)
K	X RUB	03 07 13 17 23 27 33 37 43 47 53 57	05 15 25 35 45 55	06 16 26 36 46 56	10 25 40 55
Ot	RUB	05 09 15 19 25 29 35 39 45 49 55 59	07 17 27 37 47 57	08 18 28 38 48 58	12 27 42 57
Os	X RUB RUB	07 11 17 21 27 31 37 41 47 51 57 01	09 19 29 39 49 59	10 20 30 40 50 00	14 29 44 59
T	RUB	09 13 19 23 29 33 39 43 49 53 59 03	11 21 31 41 51 01	12 22 32 42 52 02	15 30 45 00
Dd	M X	11 15 21 25 31 35 41 45 51 55 01 05	13 23 33 43 53 03	14 24 34 44 54 04	17 32 47 02
Po		12 16 22 26 32 36 42 46 52 56 02 06	14 24 34 44 54 04	15 25 35 45 55 05	19 34 49 04
Bt	RUB	14 18 24 28 34 38 44 48 54 58 04 08	16 26 36 46 56 06	17 27 37 47 57 07	20 35 50 05
Rd	RUB	15 19 25 29 35 39 45 49 55 59 05 09	17 27 37 47 57 07	18 28 38 48 58 08	22 37 52 07
Hb	S RUB	17 21 27 31 37 41 47 51 57 01 07 11	19 29 39 49 59 09	20 30 40 50 00 10	23 38 53 08
Fpo	U7 RUB RUB	19 23 29 33 39 43 49 53 59 03 09 13	21 31 41 51 01 11	22 32 42 52 02 12	25 40 55 10
Hz	RUB	20 24 30 34 40 44 50 54 00 04 10 14	22 32 42 52 02 12	23 33 43 53 03 13	27 42 57 12
Sno	U9 RUB	22 26 32 36 42 46 52 56 02 06 12 16	24 34 44 54 04 14	25 35 45 55 05 15	29 44 59 14
Au		23 27 33 37 43 47 53 57 03 07 13 17	25 35 45 55 05 15	26 36 46 56 06 16	30 45 00 15
Wt	U1 U2 M RUB	25 29 35 39 45 49 55 59 05 09 15 19	27 37 47 57 07 17	28 38 48 58 08 18	32 47 02 17
Nm	U1 U2 U4 M RUB RUB	27 31 37 41 47 51 57 01 07 11 17 21	29 39 49 59 09 19	30 40 50 00 10 20	34 49 04 19
Kus	U1 M RUB	29 33 39 43 49 53 59 03 09 13 19 23	31 41 51 01 11 21		
Go	U1 U2	31 35 41 45 51 55 01 05 11 15 21 25	33 43 53 03 13 23		
Mo	U1 U7	32 36 42 46 52 56 02 06 12 16 22 26	34 44 54 04 14 24		
Ho	U1 U6 M RUB RUB	34 38 44 48 54 58 04 08 14 18 24 28	36 46 56 06 16 26		
Pr	U1 RUB	36 40 46 50 56 00 06 10 16 20 26 30	38 48 58 08 18 28		
Kbo	U1 U8 RUB	38 42 48 52 58 02 08 12 18 22 28 32	40 50 00 10 20 30		
Gr	U1 M	39 43 49 53 59 03 09 13 19 23 29 33	41 51 01 11 21 31		
S	U1 RUB RUB	41 45 51 55 01 05 11 15 21 25 31 35	43 53 03 13 23 33		
WA	S U1 M RUB RUB	43 47 53 57 03 07 13 17 23 27 33 37	45 55 05 15 25 35		

U2 → Ruhleben (Mo-Fr HVZ)			(Mo-Fr NVZ,Sa-So,Ferien)	(früh/abends)	(nachts)
PA	S M Tram M X RUB RUB	03 07 11 15 19 23 27 31 35 39 43 47 51 55 59	04 09 14 19 24 29 34 39 44 49 54 59	04 14 24 34 44 54	09 24 39 54
VIN	M Tram RUB	04 08 12 16 20 24 28 32 36 40 44 48 52 56 00	05 10 15 20 25 30 35 40 45 50 55 00	06 16 26 36 46 56	11 26 41 56
Sh	S M	06 10 14 18 22 26 30 34 38 42 46 50 54 58 02	07 12 17 22 27 32 37 42 47 52 57 02	08 18 28 38 48 58	13 28 43 58
EB	M Tram	08 12 16 20 24 28 32 36 40 44 48 52 56 00 04	09 14 19 24 29 34 39 44 49 54 59 04	10 20 30 40 50 00	15 30 45 00
Sz		10 14 18 22 26 30 34 38 42 46 50 54 58 02 06	11 16 21 26 31 36 41 46 51 56 01 06	12 22 32 42 52 02	17 32 47 02
Lu	M RUB	12 16 20 24 28 32 36 40 44 48 52 56 00 04 08	13 18 23 28 33 38 43 48 53 58 03 08	13 23 33 43 53 03	18 33 48 03
A	S U5 U8 M M X RUB RUB	14 18 22 26 30 34 38 42 46 50 54 58 02 06 10	15 20 25 30 35 40 45 50 55 00 05 10	15 25 35 45 55 05	20 35 50 05
Ko		16 20 24 28 32 36 40 44 48 52 56 00 04 08 12	17 22 27 32 37 42 47 52 57 02 07 12	17 27 37 47 57 07	22 37 52 07
Mk	RUB	17 21 25 29 33 37 41 45 49 53 57 01 05 09 13	18 23 28 33 38 43 48 53 58 03 08 13	19 29 39 49 59 09	24 39 54 09
Sp	M RUB RUB	19 23 27 31 35 39 43 47 51 55 59 03 07 11 15	20 25 30 35 40 45 50 55 00 05 10 15	20 30 40 50 00 10	25 40 55 10
Hv		21 25 29 33 37 41 45 49 53 57 01 05 09 13 17	22 27 32 37 42 47 52 57 02 07 12 17	22 32 42 52 02 12	27 42 57 12
Mi	U6 M RUB	23 27 31 35 39 43 47 51 55 59 03 07 11 15 19	24 29 34 39 44 49 54 59 04 09 14 19	24 34 44 54 04 14	29 44 59 14
MH	M RUB	24 28 32 36 40 44 48 52 56 00 04 08 12 16 20	25 30 35 40 45 50 55 00 05 10 15 20	25 35 45 55 05 15	30 45 00 15
Pd	S M RUB	25 29 33 37 41 45 49 53 57 01 05 09 13 17 21	26 31 36 41 46 51 56 01 06 11 16 21	27 37 47 57 07 17	32 47 02 17
MB	M	27 31 35 39 43 47 51 55 59 03 07 11 15 19 23	28 33 38 43 48 53 58 03 08 13 18 23	28 38 48 58 08 18	33 48 03 18
Gu	U1 U3	28 32 36 40 44 48 52 56 00 04 08 12 16 20 24	29 34 39 44 49 54 59 04 09 14 19 24	30 40 50 00 10 20	35 50 05 20
Bs	M RUB	30 34 38 42 46 50 54 58 02 06 10 14 18 22 26	31 36 41 46 51 56 01 06 11 16 21 26	32 42 52 02 12 22	37 52 07 22
No	U1 U3 U4 M RUB RUB	32 36 40 44 48 52 56 00 04 08 12 16 20 24 28	33 38 43 48 53 58 03 08 13 18 23 28	33 43 53 03 13 23	38 53 08 23
Wt	U1 U3 M RUB	33 37 41 45 49 53 57 01 05 09 13 17 21 25 29	34 39 44 49 54 59 04 09 14 19 24 29	35 45 55 05 15 25	40 55 10 25
Zo	S U9 M X RUB RUB	36 40 44 48 52 56 00 04 08 12 16 20 24 28 32	37 42 47 52 57 02 07 12 17 22 27 32	38 48 58 08 18 28	43 58 13 28
Zo	S U9 M X RUB RUB	36 40 44 48 52 56 00 04 08 12 16 20 24 28 32	37 42 47 52 57 02 07 12 17 22 27 32	38 48 58 08 18 28	45 00 15 30
RP	M X RUB	37 41 45 49 53 57 01 05 09 13 17 21 25 29 33	38 43 48 53 58 03 08 13 18 23 28 33	39 49 59 09 19 29	46 01 16 31
Obi		39 43 47 51 55 59 03 07 11 15 19 23 27 31 35	40 45 50 55 00 05 10 15 20 25 30 35	41 51 01 11 21 31	48 03 18 33
Bmo	U7	40 44 48 52 56 00 04 08 12 16 20 24 28 32 36	41 46 51 56 01 06 11 16 21 26 31 36	42 52 02 12 22 32	49 04 19 34
So	RUB	42 46 50 54 58 02 06 10 14 18 22 26 30 34 38	43 48 53 58 03 08 13 18 23 28 33 38	44 54 04 14 24 34	51 06 21 36
Kd	S RUB	43 47 51 55 59 03 07 11 15 19 23 27 31 35 39	44 49 54 59 04 09 14 19 24 29 34 39	45 55 05 15 25 35	52 07 22 37
Th	M X RUB RUB	45 49 53 57 01 05 09 13 17 21 25 29 33 37 41	46 51 56 01 06 11 16 21 26 31 36 41	47 57 07 17 27 37	54 09 24 39
Nd/u	RUB	51 59 03 11 19 27 35 43	53 03 13 23 33 43	49 59 09 19 29 39	56 11 26 41
Nd/g	RUB	47 55 07 15 23 31 39	53 03 13 23 33 43	49 59 09 19 29 39	56 11 26 41
Sd/u		52 04 12 20 28 36 44	54 04 14 24 34 44	50 00 10 20 30 40	57 12 27 42
Sd/g		48 56 00 08 16 24 32 40	54 04 14 24 34 44	50 00 10 20 30 40	57 12 27 42
Rl/u	M RUB	54 06 14 22 30 38 46	56 06 16 26 36 46	52 02 12 22 32 42	59 14 29 44
Rl/g	M RUB	50 58 02 10 18 26 34 42	56 06 16 26 36 46	52 02 12 22 32 42	59 14 29 44

U2 → Pankow (Mo-Fr HVZ)										(Mo-Fr NVZ,Sa-So,Ferien)						(früh/abends)		(nachts)	
Rl/u	M RUB	03	11	19	27	35	43	51	59	03	13	23	33	43	53	03 13 23 33 43 53		13 28 43 58	
Rl/g	M RUB	07	15	23	31	39	47	55		03	13	23	33	43	53	03 13 23 33 43 53		13 28 43 58	
Sd/u		05	13	21	29	37	45	53		05	15	25	35	45	55	05 15 25 35 45 55		15 30 45 00	
Sd/g		09	17	25	33	41	49	57	01	05	15	25	35	45	55	05 15 25 35 45 55		15 30 45 00	
Nd/u	RUB	07	15	23	31	39	47	55		07	17	27	37	47	57	06 16 26 36 46 56		16 31 46 01	
Nd/g	RUB	11	19	27	35	43	51	59	03	07	17	27	37	47	57	06 16 26 36 46 56		16 31 46 01	
Th	M ✗ RUB RUB	09	13	17	21	25	29	33	37	41	45	49	53	57	01	05	04 09 14 19 24 29 34 39 44 49 54 59	08 18 28 38 48 58	18 33 48 03
Kd	S RUB	10	14	18	22	26	30	34	38	42	46	50	54	58	02	06	05 10 15 20 25 30 35 40 45 50 55 00	10 20 30 40 50 00	20 35 50 05
So	RUB	12	16	20	24	28	32	36	40	44	48	52	56	00	04	08	07 12 17 22 27 32 37 42 47 52 57 02	11 21 31 41 51 01	21 36 51 06
Bmo	U7	13	17	21	25	29	33	37	41	45	49	53	57	01	05	09	08 13 18 23 28 33 38 43 48 53 58 03	13 23 33 43 53 03	23 38 53 08
Obi		14	18	22	26	30	34	38	42	46	50	54	58	02	06	10	09 14 19 24 29 34 39 44 49 54 59 04	14 24 34 44 54 04	24 39 54 09
RP	M ✗ RUB	16	20	24	28	32	36	40	44	48	52	56	00	04	08	12	11 16 21 26 31 36 41 46 51 56 01 06	16 26 36 46 56 06	26 41 56 11
Zo	◆ S U9 M ✗ RUB RUB	18	22	26	30	34	38	42	46	50	54	58	02	06	10	14	13 18 23 28 33 38 43 48 53 58 03 08	18 28 38 48 58 08	28 43 58 13
Zo	◆ S U9 M ✗ RUB RUB	18	22	26	30	34	38	42	46	50	54	58	02	06	10	14	13 18 23 28 33 38 43 48 53 58 03 08	18 28 38 48 58 08	30 45 00 15
Wt	U1 U3 M RUB	20	24	28	32	36	40	44	48	52	56	00	04	08	12	16	15 20 25 30 35 40 45 50 55 00 05 10	21 31 41 51 01 11	32 47 02 17
No	U1 U3 U4 M RUB RUB	22	26	30	34	38	42	46	50	54	58	02	06	10	14	18	17 22 27 32 37 42 47 52 57 02 07 12	22 32 42 52 02 12	33 48 03 18
Bs	M RUB	23	27	31	35	39	43	47	51	55	59	03	07	11	15	19	18 23 28 33 38 43 48 53 58 03 08 13	24 34 44 54 04 14	35 50 05 20
Gu	U1 U3	25	29	33	37	41	45	49	53	57	01	05	09	13	17	21	20 25 30 35 40 45 50 55 00 05 10 15	26 36 46 56 06 16	37 52 07 22
MB	M	27	31	35	39	43	47	51	55	59	03	07	11	15	19	23	22 27 32 37 42 47 52 57 02 07 12 17	27 37 47 57 07 17	38 53 08 23
Pd	◆ S M RUB	28	32	36	40	44	48	52	56	00	04	08	12	16	20	24	23 28 33 38 43 48 53 58 03 08 13 18	29 39 49 59 09 19	40 55 10 25
MH	M RUB	30	34	38	42	46	50	54	58	02	06	10	14	18	22	26	25 30 35 40 45 50 55 00 05 10 15 20	30 40 50 00 10 20	41 56 11 26
Mi	U6 M RUB	31	35	39	43	47	51	55	59	03	07	11	15	19	23	27	26 31 36 41 46 51 56 01 06 11 16 21	31 41 51 01 11 21	42 57 12 27
Hv		32	36	40	44	48	52	56	00	04	08	12	16	20	24	28	27 32 37 42 47 52 57 02 07 12 17 22	33 43 53 03 13 23	44 59 14 29
Sp	M RUB RUB	34	38	42	46	50	54	58	02	06	10	14	18	22	26	30	29 34 39 44 49 54 59 04 09 14 19 24	34 44 54 04 14 24	45 00 15 30
Mk	RUB	35	39	43	47	51	55	59	03	07	11	15	19	23	27	31	30 35 40 45 50 55 00 05 10 15 20 25	35 45 55 05 15 25	46 01 16 31
Ko		36	40	44	48	52	56	00	04	08	12	16	20	24	28	32	31 36 41 46 51 56 01 06 11 16 21 26	37 47 57 07 17 27	48 03 18 33
A	◆ S U5 U8 M M ✗ RUB RUB	38	42	46	50	54	58	02	06	10	14	18	22	26	30	34	33 38 43 48 53 58 03 08 13 18 23 28	39 49 59 09 19 29	50 05 20 35
Lu	M RUB	40	44	48	52	56	00	04	08	12	16	20	24	28	32	36	35 40 45 50 55 00 05 10 15 20 25 30	41 51 01 11 21 31	52 07 22 37
Sz		42	46	50	54	58	02	06	10	14	18	22	26	30	34	38	37 42 47 52 57 02 07 12 17 22 27 32	42 52 02 12 22 32	53 08 23 38
EB	M Tram	44	48	52	56	00	04	08	12	16	20	24	28	32	36	40	39 44 49 54 59 04 09 14 19 24 29 34	44 54 04 14 24 34	55 10 25 40
Sh	S M	46	50	54	58	02	06	10	14	18	22	26	30	34	38	42	41 46 51 56 01 06 11 16 21 26 31 36	46 56 06 16 26 36	57 12 27 42
VIN	M Tram RUB	48	52	56	00	04	08	12	16	20	24	28	32	36	40	44	43 48 53 58 03 08 13 18 23 28 33 38	49 59 09 19 29 39	00 15 30 45
PA	S M Tram M ✗ RUB RUB	50	54	58	02	06	10	14	18	22	26	30	34	38	42	46	45 50 55 00 05 10 15 20 25 30 35 40	50 00 10 20 30 40	01 16 31 46

U5 → Alexanderplatz (Mo-Fr HVZ)										(Mo-Fr NVZ)						(früh/abends)		(nachts)	
Hö	RUB	00 – alle 4-5 min								05	15	25	35	45	55	05 15 25 35 45 55		05 20 35 50	
LL	RUB	02 – alle 4-5 min								07	17	27	37	47	57	07 17 27 37 47 57		07 22 37 52	
Hd	M Tram ✗ RUB	04 – alle 4-5 min								09	19	29	39	49	59	09 19 29 39 49 59		09 24 39 54	
C	RUB	05 – alle 4-5 min								10	20	30	40	50	00	10 20 30 40 50 00		10 25 40 55	
GK	RUB	07 – alle 4-5 min								12	22	32	42	52	02	12 22 32 42 52 02		12 27 42 57	
KL	RUB RUB	08 – alle 4-5 min	08	13	18	23	28	33	38	43	48	53	58	03		13 23 33 43 53 03		13 28 43 58	
Wh	S RUB RUB	11 – alle 4-5 min	11	16	21	26	31	36	41	46	51	56	01	06		16 26 36 46 56 06		16 31 46 01	
E	✗ RUB RUB	13 – alle 4-5 min	13	18	23	28	33	38	43	48	53	58	03	08		18 28 38 48 58 08		18 33 48 03	
Bü		15 – alle 4-5 min	15	20	25	30	35	40	45	50	55	00	05	10		20 30 40 50 00 10		20 35 50 05	
Tk	M Tram RUB RUB	17 – alle 4-5 min	17	22	27	32	37	42	47	52	57	02	07	12		22 32 42 52 02 12		23 38 53 08	
Fi	RUB RUB	19 – alle 4-5 min	19	24	29	34	39	44	49	54	59	04	09	14		24 34 44 54 04 14		25 40 55 10	
Li	◆ S Tram RUB RUB	21 – alle 4-5 min	22	27	32	37	42	47	52	57	02	07	12	17		27 37 47 57 07 17		27 42 57 12	
Md	RUB RUB	23 – alle 4-5 min	23	28	33	38	43	48	53	58	03	08	13	18		28 38 48 58 08 18		28 43 58 13	
Ff	S M Tram	24 – alle 4-5 min	25	30	35	40	45	50	55	00	05	10	15	20		30 40 50 00 10 20		30 45 00 15	
Sa		26 – alle 4-5 min	27	32	37	42	47	52	57	02	07	12	17	22		32 42 52 02 12 22		31 46 01 16	
Ft	M Tram	27 – alle 4-5 min	28	33	38	43	48	53	58	03	08	13	18	23		33 43 53 03 13 23		33 48 03 18	
WR	RUB	28 – alle 4-5 min	29	34	39	44	49	54	59	04	09	14	19	24		34 44 54 04 14 24		34 49 04 19	
Sr	RUB	30 – alle 4-5 min	31	36	41	46	51	56	01	06	11	16	21	26		36 46 56 06 16 26		35 50 05 20	
Si		31 – alle 4-5 min	32	37	42	47	52	57	02	07	12	17	22	27		37 47 57 07 17 27		37 52 07 22	
Al	◆ S U2 U8 M M ✗ RUB RUB	33 – alle 4-5 min	34	39	44	49	54	59	04	09	14	19	24	29		39 49 59 09 19 29		38 53 08 23	

U5 → Hönow (Mo-Fr HVZ)										(Mo-Fr NVZ)						(früh/abends)		(nachts)	
Al	◆ S U2 U8 M M ✗ RUB RUB	00 – alle 4-5 min								00	05	10	15	20	25	30 35 40 45 50 55		05 15 25 35 45 55	
Si	RUB	02 – alle 4-5 min								02	07	12	17	22	27	32 37 42 47 52 57		07 17 27 37 47 57	
Sr	RUB	04 – alle 4-5 min								04	09	14	19	24	29	34 39 44 49 54 59		09 19 29 39 49 59	
WR	RUB	05 – alle 4-5 min								05	10	15	20	25	30	35 40 45 50 55 00		10 20 30 40 50 00	
Ft	M Tram	06 – alle 4-5 min								06	11	16	21	26	31	36 41 46 51 56 01		11 21 31 41 51 01	
Sa		08 – alle 4-5 min								08	13	18	23	28	33	38 43 48 53 58 03		13 23 33 43 53 03	
Ff	S M Tram	09 – alle 4-5 min								10	15	20	25	30	35	40 45 50 55 00 05		15 25 35 45 55 05	
Md	RUB RUB	11 – alle 4-5 min								11	16	21	26	31	36	41 46 51 56 01 06		16 26 36 46 56 06	
Li	◆ S Tram RUB RUB	12 – alle 4-5 min								13	18	23	28	33	38	43 48 53 58 03 08		18 28 38 48 58 08	
Fi	RUB RUB	14 – alle 4-5 min								15	20	25	30	35	40	45 50 55 00 05 10		20 30 40 50 00 10	
Tk	M Tram RUB RUB	16 – alle 4-5 min								17	22	27	32	37	42	47 52 57 02 07 12		22 32 42 52 02 12	
Bü		19 – alle 4-5 min								20	25	30	35	40	45	50 55 00 05 10 15		25 35 45 55 05 15	
E	✗ RUB RUB	21 – alle 4-5 min								22	27	32	37	42	47	52 57 02 07 12 17		27 37 47 57 07 17	
Wh	S RUB RUB	23 – alle 4-5 min								24	29	34	39	44	49	54 59 04 09 14 19		29 39 49 59 09 19	
KL	RUB RUB	25 – alle 4-5 min								26	31	36	41	46	51	56 01 06 11 16 21		31 41 51 01 11 21	
GK	RUB	27 – alle 4-5 min									33	43	53	03	13	23		33 43 53 03 13 23	
C	RUB	28 – alle 4-5 min									34	44	54	04	14	24		34 44 54 04 14 24	
Hd	M Tram ✗ RUB	30 – alle 4-5 min									36	46	56	06	16	26		36 46 56 06 16 26	
LL	RUB	31 – alle 4-5 min									37	47	57	07	17	27		37 47 57 07 17 27	
Hö	RUB	33 – alle 4-5 min									39	49	59	09	19	29		39 49 59 09 19 29	

U4 → Innsbrucker Pl. (Mo-Sa HVZ)												(NVZ)					
Nm	U1 U2 U3 M RUB RUB	00	05	10	15	20	25	30	35	40	45	50	55	06	16	26	36 46 56
V		02	07	12	17	22	27	32	37	42	47	52	57	08	18	28	38 48 58
Bpo	U7	03	08	13	18	23	28	33	38	43	48	53	58	09	19	29	39 49 59
RS	M RUB RUB	05	10	15	20	25	30	35	40	45	50	55	00	11	21	31	41 51 01
Ip	S M RUB	06	11	16	21	26	31	36	41	46	51	56	01	12	22	32	42 52 02

U4 → Nollendorfplatz (Mo-Sa HVZ)												(NVZ)					
Ip	S M RUB	01	06	11	16	21	26	31	36	41	46	51	56	06	16	26	36 46 56
RS	M RUB RUB	02	07	12	17	22	27	32	37	42	47	52	57	07	17	27	37 47 57
Bpo	U7	03	08	13	18	23	28	33	38	43	48	53	58	08	18	28	38 48 58
V		05	10	15	20	25	30	35	40	45	50	55	00	10	20	30	40 50 00
Nm	U1 U2 U3 M RUB RUB	07	12	17	22	27	32	37	42	47	52	57	02	12	22	32	42 52 02

U55 → Hauptbahnhof (täglich)			
BRT	S ✗ RUB	00 10 20 30 40 50	
BUN		01 11 21 31 41 51	
HBF	DB ◆ S M M ✗ RUB RUB	02 12 22 32 42 52	

U55 → Brandenburger Tor (täglich)			
HBF	DB ◆ S M M ✗ RUB RUB	05 15 25 35 45 55	
BUN		06 16 26 36 46 56	
BRT	S ✗ RUB	07 17 27 37 47 57	

U6 → Mariendorf (Mo-Fr HVZ)										(Mo-Fr NVZ)						(früh/abends)		(nachts)	
Tg	RUB RUB	00 – alle 4-5 min	02	07	12	17	22	27	32	37	42	47	52	57	03	13 23 33 43 53		05 20 35 50	
Bk	RUB	01 – alle 4-5 min	03	08	13	18	23	28	33	38	43	48	53	58	05	15 25 35 45 55		07 22 37 52	
Hh	✗ RUB RUB	03 – alle 4-5 min	05	10	15	20	25	30	35	40	45	50	55	00	06	16 26 36 46 56		08 23 38 53	
OTI		04 – alle 4-5 min	06	11	16	21	26	31	36	41	46	51	56	01	07	17 27 37 47 57		09 24 39 54	
Scha	RUB	05 – alle 4-5 min	07	12	17	22	27	32	37	42	47	52	57	02	09	19 29 39 49 59		11 26 41 56	
Sch	M ✗ RUB	07 – alle 4-5 min	09	14	19	24	29	34	39	44	49	54	59	04	10	20 30 40 50 00		12 27 42 57	
Afr	RUB	08 – alle 4-5 min	10	15	20	25	30	35	40	45	50	55	00	05	12	22 32 42 52 02		14 29 44 59	
Rb		09 – alle 4-5 min	11	16	21	26	31	36	41	46	51	56	01	06	13	23 33 43 53 03		15 30 45 00	
Se	M Tram RUB RUB	11 – alle 4-5 min	13	18	23	28	33	38	43	48	53	58	03	08	15	25 35 45 55 05		17 32 47 02	
Lpo	U9 RUB RUB	13 – alle 4-5 min	15	20	25	30	35	40	45	50	55	00	05	10	16	26 36 46 56 06		20 35 50 05	
We	S M RUB RUB	14 – alle 4-5 min	16	21	26	31	36	41	46	51	56	01	06	11	17	27 37 47 57 07		21 36 51 06	
Ri	M RUB RUB	15 – alle 4-5 min	17	22	27	32	37	42	47	52	57	02	07	12	18	28 38 48 58 08		22 37 52 07	
Sk		16 – alle 4-5 min	18	23	28	33	38	43	48	53	58	03	08	13	20	30 40 50 00 10		23 38 53 08	
NA	M Tram RUB	17 – alle 4-5 min	19	24	29	34	39	44	49	54	59	04	09	14	21	31 41 51 01 11		24 39 54 09	
Ob	M Tram	19 – alle 4-5 min	21	26	31	36	41	46	51	56	01	06	11	16	22	32 42 52 02 12		26 41 56 11	
F	◆ S M Tram RUB	20 – alle 4-5 min	22	27	32	37	42	47	52	57	02	07	12	17	24	34 44 54 04 14		27 42 57 12	
Fr	RUB	21 – alle 4-5 min	23	28	33	38	43	48	53	58	03	08	13	18	25	35 45 55 05 15		28 43 58 13	
Mic	U2 M RUB	23 – alle 4-5 min	25	30	35	40	45	50	55	00	05	10	15	20	26	36 46 56 06 16		30 45 00 15	
Ks	M	24 – alle 4-5 min	26	31	36	41	46	51	56	01	06	11	16	21	27	37 47 57 07 17		31 46 01 16	
Hu	U1 U3 M RUB RUB	25 – alle 4-5 min	27	32	37	42	47	52	57	02	07	12	17	22	29	39 49 59 09 19		32 47 02 17	
Me	U7 M RUB RUB	27 – alle 4-5 min	29	34	39	44	49	54	59	04	09	14	19	24	31	41 51 01 11 21		34 49 04 19	
PL	RUB RUB	29 – alle 4-5 min	31	36	41	46	51	56	01	06	11	16	21	26	33	43 53 03 13 23		36 51 06 21	
Ps		30 – alle 4-5 min	32	37	42	47	52	57	02	07	12	17	22	27	34	44 54 04 14 24		37 52 07 22	
Ts	S RUB RUB	32 – alle 4-5 min	34	39	44	49	54	59	04	09	14	19	24	29	36	46 56 06 16 26		39 54 09 24	
At	M RUB RUB	33 – alle 4-5 min	35	40	45	50	55	00	05	10	15	20	25	30	37	47 57 07 17 27		40 55 10 25	
Ka	RUB	34 – alle 4-5 min	36	41	46	51	56	01	06	11	16	21	26	31	38	48 58 08 18 28		41 56 11 26	
Ull	RUB	35 – alle 4-5 min	37	42	47	52	57	02	07	12	17	22	27	32	39	49 59 09 19 29		42 57 12 27	
Wl	RUB	37 – alle 4-5 min	39	44	49	54	59	04	09	14	19	24	29	34	41	51 01 11 21 31		44 59 14 29	
Mf	M ✗ RUB RUB	38 – alle 4-5 min	40	45	50	55	00	05	10	15	20	25	30	35	42	52 02 12 22 32		45 00 15 30	

U6 → Tegel (Mo-Fr HVZ)										(Mo-Fr NVZ)						(früh/abends)		(nachts)	
Mf	M ✗ RUB RUB	00 – alle 4-5 min								01	06	11	16	21	26	31 36 41 46 51 56		06 16 26 36 46 56	
Wl	RUB	01 – alle 4-5 min								02	07	12	17	22	27	32 37 42 47 52 57		07 17 27 37 47 57	
Ull	RUB	03 – alle 4-5 min								03	08	13	18	23	28	33 38 43 48 53 58		09 19 29 39 49 59	
Ka	RUB	04 – alle 4-5 min								05	10	15	20	25	30	35 40 45 50 55 00		10 20 30 40 50 00	
At	M RUB RUB	05 – alle 4-5 min								06	11	16	21	26	31	36 41 46 51 56 01		11 21 31 41 51 01	
Ts	S RUB RUB	07 – alle 4-5 min								07	12	17	22	27	32	37 42 47 52 57 02		13 23 33 43 53 03	
Ps		08 – alle 4-5 min								09	14	19	24	29	34	39 44 49 54 59 04		14 24 34 44 54 04	
PL	RUB RUB	10 – alle 4-5 min								10	15	20	25	30	35	40 45 50 55 00 05		16 26 36 46 56 06	
Me	U7 M RUB RUB	12 – alle 4-5 min								12	17	22	27	32	37	42 47 52 57 02 07		18 28 38 48 58 08	
Hu	U1 U3 M RUB RUB	13 – alle 4-5 min								14	19	24	29	34	39	44 49 54 59 04 09		20 30 40 50 00 10	
Ks	M	15 – alle 4-5 min								15	20	25	30	35	40	45 50 55 00 05 10		21 31 41 51 01 11	
Mic	U2 M RUB	16 – alle 4-5 min								17	22	27	32	37	42	47 52 57 02 07 12		23 33 43 53 03 13	
Fr	RUB	17 – alle 4-5 min								18	23	28	33	38	43	48 53 58 03 08 13		24 34 44 54 04 14	
F	◆ S M Tram RUB	19 – alle 4-5 min								19	24	29	34	39	44	49 54 59 04 09 14		25 35 45 55 05 15	
Ob	M Tram	20 – alle 4-5 min								20	25	30	35	40	45	50 55 00 05 10 15		26 36 46 56 06 16	
NA	M Tram RUB	21 – alle 4-5 min								22	27	32	37	42	47	52 57 02 07 12 17		28 38 48 58 08 18	
Sk		22 – alle 4-5 min								23	28	33	38	43	48	53 58 03 08 13 18		29 39 49 59 09 19	
Ri	M RUB RUB	24 – alle 4-5 min								24	29	34	39	44	49	54 59 04 09 14 19		30 40 50 00 10 20	
We	S M RUB RUB	25 – alle 4-5 min								25	30	35	40	45	50	55 00 05 10 15 20		31 41 51 01 11 21	
Lpo	U9 RUB RUB	26 – alle 4-5 min								27	32	37	42	47	52	57 02 07 12 17 22		35 45 55 05 15 25	
Se	M Tram RUB RUB	27 – alle 4-5 min								28	33	38	43	48	53	58 03 08 13 18 23		36 46 56 06 16 26	
Rb		29 – alle 4-5 min								30	35	40	45	50	55	00 05 10 15 20 25		38 48 58 08 18 28	
Afr	RUB	30 – alle 4-5 min								31	36	41	46	51	56	01 06 11 16 21 26		39 49 59 09 19 29	
Sch	M ✗ RUB	31 – alle 4-5 min								32	37	42	47	52	57	02 07 12 17 22 27		40 50 00 10 20 30	
Scha	RUB	33 – alle 4-5 min								34	39	44	49	54	59	04 09 14 19 24 29		42 52 02 12 22 32	
OTI		34 – alle 4-5 min								35	40	45	50	55	00	05 10 15 20 25 30		43 53 03 13 23 33	
Hh	✗ RUB RUB	35 – alle 4-5 min								36	41	46	51	56	01	06 11 16 21 26 31		44 54 04 14 24 34	
Bk	RUB	37 – alle 4-5 min								38	43	48	53	58	03	08 13 18 23 28 33		46 56 06 16 26 36	
Tg	RUB RUB	38 – alle 4-5 min								39	44	49	54	59	04	09 14 19 24 29 34		47 57 07 17 27 37	

U8 → Hermannstr. (Mo-Fr HVZ)			(Mo-Fr NVZ)						(früh/abends)			(nachts)	
WIU	S M ✗ RUB RUB	01 06 11 16 21 26 31 36 41 46 51 56	06	16	26	36	46	56	08 18 28 38 48 58	04 19 34 49
RR	M ✗ RUB	03 08 13 18 23 28 33 38 43 48 53 58	08	18	28	38	48	58	09 19 29 39 49 59	05 20 35 50
KB	S M ✗	05 10 15 20 25 30 35 40 45 50 55 00	10	20	30	40	50	00	11 21 31 41 51 01	07 22 37 52
LD	RUB	06 11 16 21 26 31 36 41 46 51 56 01	11	21	31	41	51	01	13 23 33 43 53 03	09 24 39 54
PB	RUB RUB	07 12 17 22 27 32 37 42 47 52 57 02	07 12 17 22 27 32 37 42 47 52 57 02	14 24 34 44 54 04	10 25 40 55
RE	RUB	09 14 19 24 29 34 39 44 49 54 59 04	09 14 19 24 29 34 39 44 49 54 59 04	15 25 35 45 55 05	11 26 41 56
FN	RUB	10 15 20 25 30 35 40 45 50 55 00 05	10 15 20 25 30 35 40 45 50 55 00 05	17 27 37 47 57 07	13 28 43 58
Olu	U9 M Tram RB RUB	12 17 22 27 32 37 42 47 52 57 02 07	12 17 22 27 32 37 42 47 52 57 02 07	19 29 39 49 59 09	15 30 45 00
Pk	M	14 19 24 29 34 39 44 49 54 59 04 09	14 19 24 29 34 39 44 49 54 59 04 09	20 30 40 50 00 10	16 31 46 01
Gb	DB S RUB	15 20 25 30 35 40 45 50 55 00 05 10	15 20 25 30 35 40 45 50 55 00 05 10	22 32 42 52 02 12	18 33 48 03
Vo	RUB	17 22 27 32 37 42 47 52 57 02 07 12	17 22 27 32 37 42 47 52 57 02 07 12	23 33 43 53 03 13	19 34 49 04
B	M RUB	18 23 28 33 38 43 48 53 58 03 08 13	18 23 28 33 38 43 48 53 58 03 08 13	25 35 45 55 05 15	21 36 51 06
Ro	M RUB	20 25 30 35 40 45 50 55 00 05 10 15	20 25 30 35 40 45 50 55 00 05 10 15	26 36 46 56 06 16	22 37 52 07
W	RUB	21 26 31 36 41 46 51 56 01 06 11 16	21 26 31 36 41 46 51 56 01 06 11 16	28 38 48 58 08 18	24 39 54 09
Ap	S U2 U5 M M ✗ RB RUB	23 28 33 38 43 48 53 58 03 08 13 18	23 28 33 38 43 48 53 58 03 08 13 18	30 40 50 00 10 20	26 41 56 11
Jn	S RB RUB	25 30 35 40 45 50 55 00 05 10 15 20	25 30 35 40 45 50 55 00 05 10 15 20	31 41 51 01 11 21	27 42 57 12
He	RB RUB	26 31 36 41 46 51 56 01 06 11 16 21	26 31 36 41 46 51 56 01 06 11 16 21	33 43 53 03 13 23	29 44 59 14
Mr	M	28 33 38 43 48 53 58 03 08 13 18 23	28 33 38 43 48 53 58 03 08 13 18 23	34 44 54 04 14 24	30 45 00 15
Kbu	U1 U3 RUB	30 35 40 45 50 55 00 05 10 15 20 25	30 35 40 45 50 55 00 05 10 15 20 25	36 46 56 06 16 26	34 49 04 19
ST		31 36 41 46 51 56 01 06 11 16 21 26	31 36 41 46 51 56 01 06 11 16 21 26	38 48 58 08 18 28	35 50 05 20
Hpo	U7 M RB RUB	33 38 43 48 53 58 03 08 13 18 23 28	33 38 43 48 53 58 03 08 13 18 23 28	40 50 00 10 20 30	40 55 10 25
Bo	RUB	35 40 45 50 55 00 05 10 15 20 25 30	35 40 45 50 55 00 05 10 15 20 25 30	41 51 01 11 21 31	41 56 11 26
L		36 41 46 51 56 01 06 11 16 21 26 31	36 41 46 51 56 01 06 11 16 21 26 31	43 53 03 13 23 33	43 58 13 28
HMS	S M RB RUB	37 42 47 52 57 02 07 12 17 22 27 32	37 42 47 52 57 02 07 12 17 22 27 32	44 54 04 14 24 34	44 59 14 29

U8 → Wittenau (Mo-Fr HVZ)			(Mo-Fr NVZ)						(früh/abends)			(nachts)	
HMS	S M RB RUB	02 07 12 17 22 27 32 37 42 47 52 57	02 07 12 17 22 27 32 37 42 47 52 57	02 12 22 32 42 52	03 18 33 48
L		04 09 14 19 24 29 34 39 44 49 54 59	04 09 14 19 24 29 34 39 44 49 54 59	04 14 24 34 44 54	04 19 34 49
Bo	RUB	05 10 15 20 25 30 35 40 45 50 55 00	05 10 15 20 25 30 35 40 45 50 55 00	05 15 25 35 45 55	06 21 36 51
Hpo	U7 M RB RUB	07 12 17 22 27 32 37 42 47 52 57 02	07 12 17 22 27 32 37 42 47 52 57 02	07 17 27 37 47 57	07 22 37 52
ST		09 14 19 24 29 34 39 44 49 54 59 04	09 14 19 24 29 34 39 44 49 54 59 04	09 19 29 39 49 59	09 24 39 54
Kbu	U1 U3 RUB	11 16 21 26 31 36 41 46 51 56 01 06	11 16 21 26 31 36 41 46 51 56 01 06	11 21 31 41 51 01	11 26 41 56
Mr	M	13 18 23 28 33 38 43 48 53 58 03 08	13 18 23 28 33 38 43 48 53 58 03 08	13 23 33 43 53 03	13 28 43 58
He	RB RUB	14 19 24 29 34 39 44 49 54 59 04 09	14 19 24 29 34 39 44 49 54 59 04 09	14 24 34 44 54 04	15 30 45 00
Jn	S RB RUB	15 20 25 30 35 40 45 50 55 00 05 10	15 20 25 30 35 40 45 50 55 00 05 10	15 25 35 45 55 05	16 31 46 01
Ap	S U2 U5 M M ✗ RB RUB	17 22 27 32 37 42 47 52 57 02 07 12	17 22 27 32 37 42 47 52 57 02 07 12	17 27 37 47 57 07	18 33 48 03
W	RUB	19 24 29 34 39 44 49 54 59 04 09 14	19 24 29 34 39 44 49 54 59 04 09 14	19 29 39 49 59 09	19 34 49 04
Ro	M RB	20 25 30 35 40 45 50 55 00 05 10 15	20 25 30 35 40 45 50 55 00 05 10 15	20 30 40 50 00 10	21 36 51 06
B	M RB	22 27 32 37 42 47 52 57 02 07 12 17	22 27 32 37 42 47 52 57 02 07 12 17	22 32 42 52 02 12	22 37 52 07
Vo	RUB	23 28 33 38 43 48 53 58 03 08 13 18	23 28 33 38 43 48 53 58 03 08 13 18	23 33 43 53 03 13	24 39 54 09
Gb	DB S RUB	25 30 35 40 45 50 55 00 05 10 15 20	25 30 35 40 45 50 55 00 05 10 15 20	25 35 45 55 05 15	25 40 55 10
Pk	M	26 31 36 41 46 51 56 01 06 11 16 21	26 31 36 41 46 51 56 01 06 11 16 21	26 36 46 56 06 16	27 42 57 12
Olu	U9 M Tram RB RUB	28 33 38 43 48 53 58 03 08 13 18 23	28 33 38 43 48 53 58 03 08 13 18 23	28 38 48 58 08 18	28 43 58 13
FN	RUB	30 35 40 45 50 55 00 05 10 15 20 25	30 35 40 45 50 55 00 05 10 15 20 25	30 40 50 00 10 20	30 45 00 15
RE	RB	31 36 41 46 51 56 01 06 11 16 21 26	31 36 41 46 51 56 01 06 11 16 21 26	31 41 51 01 11 21	31 46 01 16
PB	RB RUB	32 37 42 47 52 57 02 07 12 17 22 27	32 37 42 47 52 57 02 07 12 17 22 27	32 42 52 02 12 22	33 48 03 18
LD	RUB	34 39 44 49 54 59 04 09 14 19 24 29	34 44 54 04 14 24	34 44 54 04 14 24	34 49 04 19
KB	S M ✗	35 40 45 50 55 00 05 10 15 20 25 30	35 45 55 05 15 25	35 45 55 05 15 25	35 50 05 20
RR	M ✗ RB RUB	37 42 47 52 57 02 07 12 17 22 27 32	37 47 57 07 17 27	37 47 57 07 17 27	37 52 07 22
WIU	S M ✗ RB RUB	38 43 48 53 58 03 08 13 18 23 28 33	38 48 58 08 18 28	38 48 58 08 18 28	39 54 09 24

U9 → Rath.Steglitz (Mo-Sa HVZ)			(Mo-Sa NVZ,So,Ferien)						(früh/abends)			(nachts)	
Olo	U8 M Tram RB RUB	01 05 09 13 17 21 25 29 33 37 41 45 49 53 57	01 06 11 16 21 26 31 36 41 46 51 56	01 11 21 31 41 51	01 16 31 46
Np	RUB	02 06 10 14 18 22 26 30 34 38 42 46 50 54 58	02 07 12 17 22 27 32 37 42 47 52 57	02 12 22 32 42 52	02 17 32 47
Lpu	U6 RB RUB	03 07 11 15 19 23 27 31 35 39 43 47 51 55 59	03 08 13 18 23 28 33 38 43 48 53 58	03 13 23 33 43 53	04 19 34 49
Am	RUB	05 09 13 17 21 25 29 33 37 41 45 49 53 57 01	05 10 15 20 25 30 35 40 45 50 55 00	05 15 25 35 45 55	05 20 35 50
WF	S	06 10 14 18 22 26 30 34 38 42 46 50 54 58 02	06 11 16 21 26 31 36 41 46 51 56 01	06 16 26 36 46 56	07 22 37 52
Bi		07 11 15 19 23 27 31 35 39 43 47 51 55 59 03	07 12 17 22 27 32 37 42 47 52 57 02	07 17 27 37 47 57	08 23 38 53
Tm	M ✗ RB RUB	09 13 17 21 25 29 33 37 41 45 49 53 57 01 05	09 14 19 24 29 34 39 44 49 54 59 04	09 19 29 39 49 59	09 24 39 54
Ha	RB RUB	10 14 18 22 26 30 34 38 42 46 50 54 58 02 06	10 15 20 25 30 35 40 45 50 55 00 05	10 20 30 40 50 00	11 26 41 56
Zu	S U2 M ✗ RB RUB	12 16 20 24 28 32 36 40 44 48 52 56 00 04 08	12 17 22 27 32 37 42 47 52 57 02 07	12 22 32 42 52 02	13 28 43 58
Zu	S U2 M ✗ RB RUB	12 16 20 24 28 32 36 40 44 48 52 56 00 04 08	12 17 22 27 32 37 42 47 52 57 02 07	12 22 32 42 52 02	15 30 45 00
Kfu	U1 M ✗ RB RUB	14 18 22 26 30 34 38 42 46 50 54 58 02 06 10	14 19 24 29 34 39 44 49 54 59 04 09	14 24 34 44 54 04	16 31 46 01
Snu	U3 RUB	15 19 23 27 31 35 39 43 47 51 55 59 03 07 11	15 20 25 30 35 40 45 50 55 00 05 10	15 25 35 45 55 05	17 32 47 02
Gt		16 20 24 28 32 36 40 44 48 52 56 00 04 08 12	16 21 26 31 36 41 46 51 56 01 06 11	16 26 36 46 56 06	18 33 48 03
Beo	U7 RB RUB	17 21 25 29 33 37 41 45 49 53 57 01 05 09 13	17 22 27 32 37 42 47 52 57 02 07 12	17 27 37 47 57 07	20 35 50 05
Bu	S RUB	19 23 27 31 35 39 43 47 51 55 59 03 07 11 15	19 24 29 34 39 44 49 54 59 04 09 14	19 29 39 49 59 09	21 36 51 06
Fw	RUB	20 24 28 32 36 40 44 48 52 56 00 04 08 12 16	20 25 30 35 40 45 50 55 00 05 10 15	20 30 40 50 00 10	23 38 53 08
Wsg	M ✗ RB RUB	21 25 29 33 37 41 45 49 53 57 01 05 09 13 17	21 26 31 36 41 46 51 56 01 06 11 16	21 31 41 51 01 11	24 39 54 09
Slu	M RB	23 27 31 35 39 43 47 51 55 59 03 07 11 15 19	23 28 33 38 43 48 53 58 03 08 13 18	23 33 43 53 03 13	25 40 55 10
Rzu	S M ✗ RB	24 28 32 36 40 44 48 52 56 00 04 08 12 16 20	24 29 34 39 44 49 54 59 04 09 14 19	24 34 44 54 04 14	26 41 56 11

U9 → Osloer Str. (Mo-Sa HVZ)			(Mo-Sa NVZ,So,Ferien)						(früh/abends)			(nachts)	
Rzu	S M ✗ RB	03 07 11 15 19 23 27 31 35 39 43 47 51 55 59	01 06 11 16 21 26 31 36 41 46 51 56	01 11 21 31 41 51	01 16 31 46
Slo	M RB	04 08 12 16 20 24 28 32 36 40 44 48 52 56 00	02 07 12 17 22 27 32 37 42 47 52 57	02 12 22 32 42 52	02 17 32 47
Wsg	M ✗ RB RUB	05 09 13 17 21 25 29 33 37 41 45 49 53 57 01	03 08 13 18 23 28 33 38 43 48 53 58	03 13 23 33 43 53	04 19 34 49
Fw	RUB	06 10 14 18 22 26 30 34 38 42 46 50 54 58 02	04 09 14 19 24 29 34 39 44 49 54 59	04 14 24 34 44 54	05 20 35 50
Bu	S RUB	08 12 16 20 24 28 32 36 40 44 48 52 56 00 04	06 11 16 21 26 31 36 41 46 51 56 01	06 16 26 36 46 56	06 21 36 51
Beo	U7 RB RUB	09 13 17 21 25 29 33 37 41 45 49 53 57 01 05	07 12 17 22 27 32 37 42 47 52 57 02	07 17 27 37 47 57	08 23 38 53
Gt		11 15 19 23 27 31 35 39 43 47 51 55 59 03 07	09 14 19 24 29 34 39 44 49 54 59 04	09 19 29 39 49 59	09 24 39 54
Snu	U3 RUB	12 16 20 24 28 32 36 40 44 48 52 56 00 04 08	10 15 20 25 30 35 40 45 50 55 00 05	10 20 30 40 50 00	10 25 40 55
Kfu	U1 M ✗ RB RUB	13 17 21 25 29 33 37 41 45 49 53 57 01 05 09	11 16 21 26 31 36 41 46 51 56 01 06	11 21 31 41 51 01	11 26 41 56
Zu	S U2 M ✗ RB RUB	14 18 22 26 30 34 38 42 46 50 54 58 02 06 10	12 17 22 27 32 37 42 47 52 57 02 07	12 22 32 42 52 02	13 28 43 58
Zu	S U2 M ✗ RB RUB	14 18 22 26 30 34 38 42 46 50 54 58 02 06 10	12 17 22 27 32 37 42 47 52 57 02 07	12 22 32 42 52 02	15 30 45 00
Ha	RB RUB	16 20 24 28 32 36 40 44 48 52 56 00 04 08 12	14 19 24 29 34 39 44 49 54 59 04 09	14 24 34 44 54 04	17 32 47 02
Tm	M ✗ RB RUB	18 22 26 30 34 38 42 46 50 54 58 02 06 10 14	16 21 26 31 36 41 46 51 56 01 06 11	16 26 36 46 56 06	18 33 48 03
Bi		19 23 27 31 35 39 43 47 51 55 59 03 07 11 15	17 22 27 32 37 42 47 52 57 02 07 12	17 27 37 47 57 07	20 35 50 05
WF	S	20 24 28 32 36 40 44 48 52 56 00 04 08 12 16	18 23 28 33 38 43 48 53 58 03 08 13	18 28 38 48 58 08	21 36 51 06
Am	RUB	22 26 30 34 38 42 46 50 54 58 02 06 10 14 18	20 25 30 35 40 45 50 55 00 05 10 15	20 30 40 50 00 10	22 37 52 07
Lpu	U6 RB RUB	23 27 31 35 39 43 47 51 55 59 03 07 11 15 19	21 26 31 36 41 46 51 56 01 06 11 16	21 31 41 51 01 11	24 39 54 09
Np	RUB	25 29 33 37 41 45 49 53 57 01 05 09 13 17 21	23 28 33 38 43 48 53 58 03 08 13 18	23 33 43 53 03 13	25 40 55 10
Olo	U8 M Tram RB RUB	26 30 34 38 42 46 50 54 58 02 06 10 14 18 22	24 29 34 39 44 49 54 59 04 09 14 19	24 34 44 54 04 14	26 41 56 11

U7 → Rudow (Mo-Fr HVZ)			(Mo-Fr NVZ,Sa-So,Ferien)			(früh/abends)			(nachts)	
RSp	DB S M ✗ RB RUB	00 – alle 4-5 min	01 06 11 16 21 26 31 36 41 46 51 56	05 15 25 35 45 55	12 27 42 57
AS	✗	01 – alle 4-5 min	02 07 12 17 22 27 32 37 42 47 52 57	06 16 26 36 46 56	13 28 43 58
Zi	✗	02 – alle 4-5 min	04 09 14 19 24 29 34 39 44 49 54 59	07 17 27 37 47 57	15 30 45 00
Hs	✗ RB RUB	04 – alle 4-5 min	06 11 16 21 26 31 36 41 46 51 56 01	09 19 29 39 49 59	17 32 47 02
P	RB RUB	06 – alle 4-5 min	07 12 17 22 27 32 37 42 47 52 57 02	11 21 31 41 51 01	18 33 48 03
Rm	RB RUB	07 – alle 4-5 min	09 14 19 24 29 34 39 44 49 54 59 04	12 22 32 42 52 02	20 35 50 05
Sie	RUB	09 – alle 4-5 min	10 15 20 25 30 35 40 45 50 55 00 05	14 24 34 44 54 04	21 36 51 06
Hl	RUB	10 – alle 4-5 min	12 17 22 27 32 37 42 47 52 57 02 07	15 25 35 45 55 05	23 38 53 08
JK	M ✗ RUB	11 – alle 4-5 min	13 18 23 28 33 38 43 48 53 58 03 08	16 26 36 46 56 06	24 39 54 09
Jho	S M ✗ RUB	13 – alle 4-5 min	14 19 24 29 34 39 44 49 54 59 04 09	18 28 38 48 58 08	25 40 55 10
Mp	M	14 – alle 4-5 min	16 21 26 31 36 41 46 51 56 01 06 11	19 29 39 49 59 09	27 42 57 12
Rw	M	16 – alle 4-5 min	17 22 27 32 37 42 47 52 57 02 07 12	21 31 41 51 01 11	28 43 58 13
Bmu	U2	17 – alle 4-5 min	19 24 29 34 39 44 49 54 59 04 09 14	24 34 44 54 04 14	30 45 00 15
Wd	S M ✗ RUB	18 – alle 4-5 min	20 25 30 35 40 45 50 55 00 05 10 15	25 35 45 55 05 15	31 46 01 16
Ad	M ✗ RB RUB	20 – alle 4-5 min	21 26 31 36 41 46 51 56 01 06 11 16	26 36 46 56 06 16	32 47 02 17
Kn	RUB	21 – alle 4-5 min	22 27 32 37 42 47 52 57 02 07 12 17	27 37 47 57 07 17	33 48 03 18
Fpu	U3 RB RUB	22 – alle 4-5 min	24 29 34 39 44 49 54 59 04 09 14 19	29 39 49 59 09 19	35 50 05 20
Bli	RB RUB	24 – alle 4-5 min	25 30 35 40 45 50 55 00 05 10 15 20	30 40 50 00 10 20	36 51 06 21
Beu	U9 RB RUB	25 – alle 4-5 min	26 31 36 41 46 51 56 01 06 11 16 21	31 41 51 01 11 21	39 54 09 24
Bpu	U4	26 – alle 4-5 min	28 33 38 43 48 53 58 03 08 13 18 23	33 43 53 03 13 23	41 56 11 26
Ei		27 – alle 4-5 min	29 34 39 44 49 54 59 04 09 14 19 24	34 44 54 04 14 24	42 57 12 27
Kt	M RB	29 – alle 4-5 min	30 35 40 45 50 55 00 05 10 15 20 25	35 45 55 05 15 15	43 58 13 28
Y	S M	30 – alle 4-5 min	32 37 42 47 52 57 02 07 12 17 22 27	37 47 57 07 17 27	45 00 15 30
Mu	U1 U3	32 – alle 4-5 min	33 38 43 48 53 58 03 08 13 18 23 28	38 48 58 08 18 28	46 01 16 31
Me	U6 M RB RUB	34 – alle 4-5 min	35 40 45 50 55 00 05 10 15 20 25 30	40 50 00 10 20 30	49 04 19 34
Gs	RUB	35 – alle 4-5 min	37 42 47 52 57 02 07 12 17 22 27 32	42 52 02 12 22 32	50 05 20 35
Sü		37 – alle 4-5 min	38 43 48 53 58 03 08 13 18 23 28 33	43 53 03 13 23 33	52 07 22 37
Hpu	U8 M RB RUB	39 – alle 4-5 min	40 45 50 55 00 05 10 15 20 25 30 35	45 55 05 15 25 35	55 10 25 40
Rk	RB RUB	40 – alle 4-5 min	42 47 52 57 02 07 12 17 22 27 32 37	47 57 07 17 27 37	56 11 26 41
KM		42 – alle 4-5 min	43 48 53 58 03 08 13 18 23 28 33 38	48 58 08 18 28 38	58 13 28 43
Nk	S RB RUB	43 – alle 4-5 min	45 50 55 00 05 10 15 20 25 30 35 40	50 00 10 20 30 40	59 14 29 44
Gz	RUB	45 – alle 4-5 min	46 51 56 01 06 11 16 21 26 31 36 41	51 01 11 21 31 41	01 16 31 46
Bl	RUB	46 – alle 4-5 min	48 53 58 03 08 13 18 23 28 33 38 43	53 03 13 23 33 43	02 17 32 47
Pi	M	48 – alle 4-5 min	49 54 59 04 09 14 19 24 29 34 39 44	54 04 14 24 34 44	04 19 34 49
Br	M RUB	49 – alle 4-5 min	51 56 01 06 11 16 21 26 31 36 41 46	56 06 16 26 36 46	05 20 35 50
Jt	M ✗ RUB	51 – alle 4-5 min	52 57 02 07 12 17 22 27 32 37 42 47	57 07 17 27 37 47	07 22 37 52
La	RUB	52 – alle 4-5 min	54 59 04 09 14 19 24 29 34 39 44 49	59 09 19 29 39 49	08 23 38 53
Wk		54 – alle 4-5 min	55 00 05 10 15 20 25 30 35 40 45 50	00 10 20 30 40 50	10 25 40 55
Zd	RUB	55 – alle 4-5 min	56 01 06 11 16 21 26 31 36 41 46 51	01 11 21 31 41 51	11 26 41 56
R	✗ RUB	56 – alle 4-5 min	58 03 08 13 18 23 28 33 38 43 48 53	03 13 23 33 43 53	12 27 42 57

U7 → Spandau (Mo-Fr HVZ)			(Mo-Fr NVZ,Sa-So,Ferien)			(früh/abends)			(nachts)	
R	✗ RUB	00 – alle 4-5 min	00 05 10 15 20 25 30 35 40 45 50 55	05 15 25 35 45 55	01 16 31 46
Zd	RUB	02 – alle 4-5 min	02 07 12 17 22 27 32 37 42 47 52 57	06 16 26 36 46 56	03 18 33 48
Wk		03 – alle 4-5 min	03 08 13 18 23 28 33 38 43 48 53 58	07 17 27 37 47 57	04 19 34 49
La	RUB	04 – alle 4-5 min	04 09 14 19 24 29 34 39 44 49 54 59	09 19 29 39 49 59	05 20 35 50
Jt	M ✗ RUB	06 – alle 4-5 min	06 11 16 21 26 31 36 41 46 51 56 01	10 20 30 40 50 00	07 22 37 52
Br	M RUB	08 – alle 4-5 min	08 13 18 23 28 33 38 43 48 53 58 03	12 22 32 42 52 02	09 24 39 54
Pi	M	09 – alle 4-5 min	09 14 19 24 29 34 39 44 49 54 59 04	13 23 33 43 53 03	10 25 40 55
Bl	RUB	10 – alle 4-5 min	10 15 20 25 30 35 40 45 50 55 00 05	15 25 35 45 55 05	11 26 41 56
Gz	RUB	12 – alle 4-5 min	12 17 22 27 32 37 42 47 52 57 02 07	17 27 37 47 57 07	13 28 43 58
Nk	S RB RUB	14 – alle 4-5 min	14 19 24 29 34 39 44 49 54 59 04 09	18 28 38 48 58 08	15 30 45 00
KM		15 – alle 4-5 min	15 20 25 30 35 40 45 50 55 00 05 10	20 30 40 50 00 10	16 31 46 01
Rk	RB RUB	16 – alle 4-5 min	16 21 26 31 36 41 46 51 56 01 06 11	21 31 41 51 01 11	17 32 47 02
Hpu	U8 M RB RUB	18 – alle 4-5 min	18 23 28 33 38 43 48 53 58 03 08 13	22 32 42 52 02 12	19 34 49 04
Sü		20 – alle 4-5 min	20 25 30 35 40 45 50 55 00 05 10 15	24 34 44 54 04 14	21 36 51 06
Gs	RUB	21 – alle 4-5 min	21 26 31 36 41 46 51 56 01 06 11 16	26 36 46 56 06 16	22 37 52 07
Me	U6 M RB RUB	23 – alle 4-5 min	23 28 33 38 43 48 53 58 03 08 13 18	28 38 48 58 08 18	25 40 55 10
Mu	U1 U3	25 – alle 4-5 min	25 30 35 40 45 50 55 00 05 10 15 20	29 39 49 59 09 19	26 41 56 11
Y	S M	26 – alle 4-5 min	26 31 36 41 46 51 56 01 06 11 16 21	31 41 51 01 11 21	28 43 58 13
Kt	M RB	28 – alle 4-5 min	28 33 38 43 48 53 58 03 08 13 18 23	32 42 52 02 12 22	29 44 59 14
Ei		29 – alle 4-5 min	29 34 39 44 49 54 59 04 09 14 19 24	34 44 54 04 14 24	31 46 01 16
Bpu	U4	30 – alle 4-5 min	30 35 40 45 50 55 00 05 10 15 20 25	35 45 55 05 15 25	32 47 02 17
Beu	U9 RB RUB	32 – alle 4-5 min	32 37 42 47 52 57 02 07 12 17 22 27	38 48 58 08 18 28	33 48 03 18
Bli	RB RUB	33 – alle 4-5 min	33 38 43 48 53 58 03 08 13 18 23 28	39 49 59 09 19 29	34 49 04 19
Fpu	U3 RB RUB	34 – alle 4-5 min	34 39 44 49 54 59 04 09 14 19 24 29	41 51 01 11 21 31	36 51 06 21
Kn	RUB	36 – alle 4-5 min	36 41 46 51 56 01 06 11 16 21 26 31	42 52 02 12 22 32	37 52 07 22
Ad	M ✗ RB RUB	37 – alle 4-5 min	37 42 47 52 57 02 07 12 17 22 27 32	43 53 03 13 23 33	38 53 08 23
Wd	S M ✗ RUB	38 – alle 4-5 min	38 43 48 53 58 03 08 13 18 23 28 33	45 55 05 15 25 35	40 55 10 25
Bmu	U2	40 – alle 4-5 min	40 45 50 55 00 05 10 15 20 25 30 35	46 56 06 16 26 36	41 56 11 26
Rw	M	41 – alle 4-5 min	41 46 51 56 01 06 11 16 21 26 31 36	47 57 07 17 27 37	42 57 12 27
Mp	M	43 – alle 4-5 min	43 48 53 58 03 08 13 18 23 28 33 38	49 59 09 19 29 39	44 59 14 29
Jhu	S M ✗ RUB	44 – alle 4-5 min	44 49 54 59 04 09 14 19 24 29 34 39	50 00 10 20 30 40	45 00 15 30
JK	M ✗ RUB	45 – alle 4-5 min	45 50 55 00 05 10 15 20 25 30 35 40	52 02 12 22 32 42	47 02 17 32
Hl	RUB	47 – alle 4-5 min	47 52 57 02 07 12 17 22 27 32 37 42	53 03 13 23 33 43	48 03 18 33
Sie	RUB	48 – alle 4-5 min	48 53 58 03 08 13 18 23 28 33 38 43	55 05 15 25 35 45	50 05 20 35
Rm	RB RUB	49 – alle 4-5 min	49 54 59 04 09 14 19 24 29 34 39 44	56 06 16 26 36 46	51 06 21 36
P	RB RUB	51 – alle 4-5 min	51 56 01 06 11 16 21 26 31 36 41 46	58 08 18 28 38 48	53 08 23 38
Hs	✗ RB RUB	53 – alle 4-5 min	53 58 03 08 13 18 23 28 33 38 43 48	59 09 19 29 39 49	54 09 24 39
Zi	✗	54 – alle 4-5 min	54 59 04 09 14 19 24 29 34 39 44 49	01 11 21 31 41 51	56 11 26 41
AS	✗	56 – alle 4-5 min	56 01 06 11 16 21 26 31 36 41 46 51	02 12 22 32 42 52	57 12 27 42
RSp	DB S M ✗ RB RUB	57 – alle 4-5 min	57 02 07 12 17 22 27 32 37 42 47 52	03 13 23 33 43 53	58 13 28 43

N1 → S+U Zoologischer Garten

BWRS/WA	M M10	11 25 41 55
S	RB N65	14 28 44 58
Gr	M M29	18 32 48 02
Kbo/Kbu	N8	20 34 50 04
Pr		21 35 51 05
Ho/Hu	M M41 RB N42	26 37 56 07
Mehringbr.	N6	26 40 56 10
Mo/Mu		27 41 57 11
MB	M M29	29 43 59 13
Pdmr. Br.	N2 M M29 M48	30 44 00 14
Kus	N2 M M48	32 46 02 16
Bs	N2 M M19 M48	33 47 03 17
No/Nm/Nu	N2 M M19 RB N26	34 48 04 18
Wt	N2 N3 M M19 M29 M46 RB N26	37 51 07 21
Kfo/Kfu	N2 N3 N9 M M19 M29 M46 RB N10 N26	54 24
BZOS/Zo/Zu	N2 N9 M M45 M46 M49 RB N10 N26	56 26

N1 → S+U Warschauer Straße

BZOS/Zo/Zu	N2 N9 M M45 M46 M49 RB N10 N26	00 30
Kfo/Kfu	N2 N3 N9 M M19 M29 M46 RB N10 N26	02 32
Wt	N2 N3 M M19 M29 M46 RB N26	05 21 35 51
No/Nm/Nu	N2 M M19 RB N26	08 24 38 54
Bs	N2 M M19 M48	09 25 39 55
Kus	N2 M M48	10 26 40 56
Pdmr. Br.	N2 M M29 M48	12 28 42 58
MB	M M29	13 29 43 59
Mo/Mu		15 31 45 01
Mehringbr.	N6	16 32 46 02
Ho/Hu	M M41 RB N42	17 33 47 03
Pr		19 35 49 05
Kbo/Kbu	N8	20 36 50 06
Gr	M M29	22 38 52 08
S	RB N65	25 41 55 11
BWRS/WA	M M10	28 44 58 14

N3 → S Mexikoplatz

Wt	N1 N2 M M19 M29 M46 RB N26	14 44
Kfo/Kfu	N1 N2 N9 M M19 M29 M46 RB N10 N26	17 47
Sno/Snu	N9	20 50
Hz		21 51
Fpo/Fpu	N7 RB N42	23 53
BHO	RB N10	25 55
BHEI/Hb		27 57
Wiesbad. Str.		30 00
Bt		32 02
Rohlfsstr.		33 03
Dd	M M11	36 06
T		38 08
Os	RB N10	42 12
Onk.-Tom-Str.		44 14
K		46 16
BMEX		48 18

N3 → U Wittenbergplatz

BMEX		20 50
K		22 52
Onk.-Tom-Str.		24 54
Os	RB N10	26 56
T		28 58
Dd	M M11	30 00
Rohlfsstr.		32 02
Bt		34 04
Wiesbad. Str.		36 06
BHEI/Hb		39 09
BHO	RB N10	41 11
Fpo/Fpu	N7 RB N42	47 17
Hz		49 19
Sno/Snu	N9	50 20
Kfo/Kfu	N1 N2 N9 M M19 M29 M46 RB N10 N26	52 22
Wt	N1 N2 M M19 M29 M46 RB N26	55 25

N2 → U Ruhleben

				WE	
BPKW/PA	M M1 M M27 RB N50	26	56		
VIN	M M1	29	59		
Bornh.Str.	M M1 M13	31	01		
BSAL/Sh	M M1	32	02		
EB	M M1 M10	35	05		
Sz		38	08		
Lu		40	10		
ALX/A/Al/Ap	M M48 RB N42			09	39
W	N5 N8 M M1 RB N40 N42 N65	27 42 57 12		12	42
BHKM	N5 N8 M M1 M4 M5 RB N40 N42 N65	28 43 58 13		13	43
BHKM	N5 N8 M M1 M4 M5 RB N40 N42 N65	30 45 00 15		15	45
ULO/ULU	N6	34 49 04 19		19	49
MH		38 53 08 23		23	53
BPOP/Pd	M M41 M48	42 57 12 27		27	57
Pdmr. Br.	N1 M M29 M48	45 00 15 30		30	00
Kus	N1 M M48	47 02 17 32		32	02
Bs	N1 M M19 M48	48 03 18 33		33	03
No/Nm/Nu	N1 M M19 RB N26	49 04 19 34		34	04
Wt	N1 N3 M M19 M29 M46 RB N26	52 07 22 37		37	07
Kfo/Kfu	N1 N3 N9 M M19 M29 M46 RB N10 N26	55 10 25 40		40	10
BZOS/Zo/Zu	N1 N9 M M45 M46 M49 RB N10 N26	56 11 26 41		41	11
BZOS/Zo/Zu	N1 N9 M M45 M46 M49 RB N10 N26	15	45		
RP	M M45	18	48		
Obi		20	50		
Bmo/Bmu	N7	24	54		
So		26	56		
Kd		27	57		
Th	M M49 RB N42	30	00		
Nd		32	02		
Rl	M M45	36	06		

N2 → S+U Pankow

				WE	
Rl	M M45	21	51		
Nd		25	55		
Th	M M49 RB N42	27	57		
Kd		28	58		
So		30	00		
Bmo/Bmu	N7	33	03		
Obi		35	05		
RP	M M45	37	07		
BZOS/Zo/Zu	N1 N9 M M45 M46 M49 RB N10 N26	43	13		
BZOS/Zo/Zu	N1 N9 M M45 M46 M49 RB N10 N26	30 45 00 15		00	30
Kfo/Kfu	N1 N3 N9 M M19 M29 M46 RB N10 N26	32 47 02 17		02	32
Wt	N1 N3 M M19 M29 M46 RB N26	35 50 05 20		05	35
No/Nm/Nu	N1 M M19 RB N26	38 53 08 23		08	38
Bs	N1 M M19 M48	39 54 09 24		09	39
Kus	N1 M M48	40 55 10 25		10	40
Pdmr. Br.	N1 M M29 M48	42 57 12 27		12	42
BPOP/Pd	M M41 M48	45 00 15 30		15	45
MH		47 02 17 32		17	47
ULO/ULU	N6	50 05 20 35		20	50
BHKM	N5 N8 M M1 M4 M5 RB N40 N42 N65	55 10 25 40		25	55
BHKM	N5 N8 M M1 M4 M5 RB N40 N42 N65	15	45	25	55
W	N5 N8 M M1 RB N40 N42 N65	17	47	27	57
ALX/A/Al/Ap	M M48 RB N42			29	59
Lu		20	50		
Sz		21	51		
EB	M M1 M10	24	54		
BSAL/Sh	M M1	27	57		
Bornh. Str.	M M1 M13	28	58		
VIN	M M1	30	00		
BPKW/PA	M M1 M M27 RB N50	33	03		

N6 → U Alt-Mariendorf

Tg	RB N22 N24 N25 N33	07 37
Bk		09 39
Hh	RB N33	11 41
Otisstraße		13 43
Scha		15 45
Sch	M M21	18 48
Afr		21 51
Rb		22 52
Se	M M13 RB N20 N26	25 55
Lpo/Lpu	N9 RB N20	28 58
BWED/WE	RB N20	29 59
Ri	M M27 RB N20	31 01
Sk		33 03
NA	M M10 RB N40	35 05
Ob	M M1	37 07
BFST/BFSTT/F	M M1	38 08
ULO/ULU	N2	40 10
Mic	M M48	41 11
Ks	M M29	43 13
Mehringbr.	N1	50 20
Me	N7 M M19 RB N42	53 23
Me	N7 M M19 RB N42	58 28
PL	RB N42	59 29
Ps		01 31
Ts	RB N84	02 32
At	M M46 RB N84	04 34
Ka		06 36
Ull		08 38
Wl		10 40
Mf (Alt-M'df)	M M76 M77 RB N79	12 42

N6 → U Alt-Tegel

Mf (Alt-M'df)	M M76 M77 RB N79	16 46
Wl		17 47
Ull		19 49
Ka		21 51
At	M M46 RB N84	24 54
Ts	RB N84	26 56
Ps		28 58
PL	RB N42	29 59
Me	N7 M M19 RB N42	36 06
Mehringbr.	N1	39 09
Ks	M M29	42 12
Mic	M M48	44 14
ULO/ULU	N2	46 16
BFST/BFSTT/F	M M1	48 18
Ob	M M1	50 20
NA	M M10 RB N40	52 22
Sk		53 23
Ri	M M27 RB N20	55 25
BWED/WE	RB N20	56 26
Lpo/Lpu	N9 RB N20	58 28
Lpo/Lpu	N9 RB N20	02 32
Se	M M13 RB N20 N26	04 34
Rb		08 38
Afr		09 39
Sch	M M21	13 43
Scha		17 47
Otisstraße		18 48
Hh	RB N33	20 50
Bk		22 52
Tg	RB N22 N24 N25 N33	24 54

N8 → S+U Hermannstraße

Wilhelmsr. D.	RB N24 N53	21 51
WIU	M M21 RB N24	25 55
RR		28 58
KB	M M21	31 01
LD		33 03
PB	RB N20	35 05
RE		38 08
FN		40 10
Olo/Olu	N9 M M13 RB N52	42 12
Olo/Olu	N9 M M13 RB N52	44 14
Pk	M M27	47 17
BGB/Gb		49 19
Vo		52 22
B	M M10	53 23
Ro	M M1 RB N40	55 25
W	N2 N5 M M1 RB N40 N42 N65	56 26
BHKM	N2 N5 M M1 M4 M5 RB N40 N42 N65	57 27
BHKM	N2 N5 M M1 M4 M5 RB N40 N42 N65	00 30
BJB/Jn	RB N40 N65	04 34
He	RB N65	06 36
Mr	M M29	08 38
Kbo/Kbu (N)	N1	13 43
Kbo/Kbu (S)	N1	14 44
ST		16 46
Hpo/Hpu (W)	N7 M M29 M41 RB N94	18 48
Hpo/Hpu (W)	N7 M M29 M41 RB N94	18 48
Bo		19 49
L		21 51
HMS	M M44 RB N79	23 53

N8 → Wilhelmsruher Damm

HMS	M M44 RB N79	02 32
L		04 34
Bo		06 36
Hpo/Hpu (O)	N7 M M29 M41 RB N94	09 39
Hpo/Hpu (O)	N7 M M29 M41 RB N94	12 42
ST		14 44
Kbo/Kbu (S)	N1	16 46
Kbo/Kbu (N)	N1	17 47
Mr	M M29	19 49
He	RB N65	21 51
BJB/Jn	RB N40 N65	22 52
BHKM	N2 N5 M M1 M4 M5 RB N40 N42 N65	25 55
BHKM	N2 N5 M M1 M4 M5 RB N40 N42 N65	30 00
W	N2 N5 M M1 RB N40 N42 N65	31 01
Ro	M M1 RB N40	32 02
B	M M10 RB N40	35 05
Vo		36 06
BGB/Gb		38 08
Pk	M M27	40 10
Olo/Olu	N9 M M13 RB N52	44 14
FN		46 16
RE		48 18
PB	RB N20	51 21
LD		53 23
KB	M M21	55 25
RR		58 28
WIU	M M21 RB N24	01 31
Wilhelmsr. D.	RB N24 N53	07 37

N5 → S Hackescher Markt

Riesaer Str.	M M6 RB N95	11	41
Hö		14	44
LL		15	45
Hd	M M6	19	49
C		21	51
GK		23	53
KL	RB N91	26	56
BWT/Wh	RB N69 N90 N91 N95	29	59
BWT/Wh	RB N69 N90 N91 N95	31 46 01 16	
Alt-Biesdorf		34 49 04 19	
Rhinstr.	M M17	39 54 09 24	
R.-Uhrig-Str.		40 55 10 25	
Lichtenb. Br.	RB N50 N94	41 56 11 26	
Md	RB N50 N56 N94	42 57 12 27	
BFA/Ff	M M13	44 59 14 29	
Sa		46 01 16 31	
Ft	M M10	47 02 17 32	
WR		49 04 19 34	
Sr		51 06 21 36	
Si		53 08 23 38	
A/Al/Ap (U)	M M4 M5 RB N65	54 09 24 39	
W	N2 RB N42	57 27	
BALX (Memh.s)	M M2 M M48 RB N42	09	39
BALX (Liebk.)	M M48	10	40
BHKM	N2 N8 M M1 M4 M5 RB N40 N42 N65	12	42

N5 → Riesaer Straße

BHKM	N2 N8 M M1 M4 M5 RB N40 N42 N65	00 15 30 45
W	N2 RB N42	02 17 32 47
A/Al/Ap (U)	M M4 M5 RB N65	04 19 34 49
Si		06 21 36 51
Sr		08 23 38 53
WR		10 25 40 55
Ft	M M10	12 27 42 57
Sa		14 29 44 59
Ff	M M13	16 31 46 01
Md	RB N50 N56 N94	18 33 48 03
Lichtenb. Br.	RB N50 N94	19 34 49 04
R.-Uhrig-Str.		21 36 51 06
Rhinstr.	M M17	22 37 52 07
Alt-Biesdorf		27 42 57 12
BWT/Wh	RB N69 N90 N91 N95	31 46 01 16
KL	RB N91	35 05
GK		37 07
C		39 09
Hd	M M6	41 11
LL		45 15
Hö		46 16
Riesaer Str.	M M6 RB N95	48 18

N7 → Flughafen Schönefeld

			WE
BSPA/RSp	M32 M37 M45 N30 N34	08 38	
AS		10 40	
Zi		11 41	
Hs	N33	13 43	
P	N39	15 45	
Rm	N23 N39	17 47	
Sie		19 49	
Halemweg		21 51	
JK	M21	24 54	
BJUN/Jho/Jhu	M21 M27	26 56	
Mp	M27	28 58	
Rw	M45	30 00	
Bmo/Bmu	N2	32 02	
Ks-Friedr.-S.	M49	34 04	
BCHS		35 05	
Ad	M19 M29 N10	37 07	
Ad	M19 M29 N10	40 10	
Kn		43 13	
Fpo/Fpu	N3 N42	44 14	
Bli	N42	46 16	
Beo/Beu	N9 N42	48 18	
Beo/Beu	N9 N42	53 23	
Bpo/Bpu		54 24	
Grunewaldstr.	M46	54 24	
Ei		55 25	
Kt	M48	57 27	
BGGS/Y	M19	59 29	
BYOR/Y	M19	00 30	
Großbeerenstr	M19	02 32	
Me	N6 M19 N42	03 33	
Gs		05 35	
Sü		08 38	
Hpo/Hpu (O)	N8 M29 M41 N94	11 41	
Hpo/Hpu (O)	N8 M29 M41 N94	13 43	
Hpo/Hpu (W)	N8 M29 M41 N94	14 44	
Hpo/Hpu (W)	N8 M29 M41 N94	18 48	
Rk	N94	21 51	
KM			
Nk	N79	28 58	
Gz		30 00	
Buschkrug		33 03	
Parchim. All.	M46	35 05	
Gutschmidtstr		38 08	
Johann. Ch.	M11	40 10	
Lipschitzall.	M11	42 12	
Wutzkyallee	M11	43 13	
Zwickauer D.	M11	44 14	
R		47 17	47 17
BFLH	N60	55 25	55 25
SXF ✈	N60	57 27	57 27

N7 → S+U Rathaus Spandau

			WE
SXF ✈	N60	06 36	03 33
BFLH	N60	08 38	05 35
R		15 45	12 42
Zwickauer D.	M11	18 48	
Wutzkyallee	M11	19 49	
Lipschitzall.	M11	20 50	
Johann. Ch.	M11	22 52	
Gutschmidtstr		24 54	
Parchim. All.	M46	27 57	
Buschkrug		29 59	
Gz		32 02	
Nk	N79	34 04	
KM		36 06	
Rk	N94	38 08	
Hpo/Hpu (O)	N8 M29 M41 N94	40 10	
Hpo/Hpu (O)	N8 M29 M41 N94	43 13	
Hpo/Hpu (W)	N8 M29 M41 N94	44 14	
Hpo/Hpu (W)	N8 M29 M41 N94	48 18	
Sü		51 21	
Gs		54 24	
Me	N6 M19 N42	56 26	
Großbeerenstr	M19	57 27	
BYOR/Y	M19	59 29	
BGGS/Y	M19	00 30	
Kt	M48	02 32	
Ei		04 34	
Grunewaldstr.	M46	05 35	
Bpo/Bpu		05 35	
Beo/Beu	N9 N42	07 37	
Bli	N42	10 40	
Fpo/Fpu	N3 N42	11 41	
Fpo/Fpu	N3 N42	14 44	
Kn		15 45	
Ad	M19 M29 N10	17 47	
BCHS		18 48	
Ks-Friedr.-S.	M49	19 49	
Bmo/Bmu	N2	22 52	
Rw	M45	24 54	
Mp	M27	26 56	
BJUN/Jho/Jhu	M21 M27	28 58	
JK	M21	30 00	
Halemweg		33 03	
Sie		35 05	
Rm	N23 N39	37 07	
P	N39	39 09	
Hs	N33	41 11	
Hs	N33	44 14	
Zi		46 16	
AS		47 17	
BSPA/RSp	M32 M37 M45 N30 N34	50 20	

N9 → S+U Rathaus Steglitz

Olo/Olu	N8 M13 N52	06 21 36 51
Np		09 24 39 54
Lpo/Lpu	N6 N20	11 26 41 56
Lpo/Lpu	N6 N20	11 29 41 59
Am		13 31 43 01
BWF/WF		15 33 45 03
Bi		16 34 46 04
Tm	M27 N40	17 35 47 05
Tm	M27 N40	19 35 49 05
Bachstraße		21 37 51 07
BTGN		22 38 52 08
BZOS/Zo/Zu	N1 N2 M45 M46 M49 N10 N26	26 42 56 12
BZOS/Zo/Zu	N1 N2 M45 M46 M49 N10 N26	45 15
Kfo/Kfu	N1 N2 N3 M19 M29 M46 N10 N26	47 17
Sno/Snu	N3	50 20
Gt		51 21
Beo/Beu	N7 N42	53 23
BBUP/Bu		56 26
Fw		58 28
Wsg	M48 M76 N81	01 31
Slo/Slu	M48	02 32
BRST/Rzu	M48 M82 M85 N88	05 35

N9 → U Osloer Straße

BRST/Rzu	M48 M82 M85 N88	28 58
Slo/Slu	M48	30 00
Wsg	M48 M76 N81	32 02
Fw		34 04
BBUP/Bu		35 05
Beo/Beu	N7 N42	38 08
Gt		40 10
Sno/Snu	N3	41 11
Kfo/Kfu	N1 N2 N3 M19 M29 M46 N10 N26	43 13
BZOS/Zo/Zu	N1 N2 M45 M46 M49 N10 N26	44 14
BZOS/Zo/Zu	N1 N2 M45 M46 M49 N10 N26	30 45 00 15
BTGN		33 48 03 18
Bachstraße		34 49 04 19
Tm	M27 N40	37 52 07 22
Bi		39 54 09 24
BWF/WF		40 55 10 25
Am		42 57 12 27
Lpo/Lpu	N6 N20	45 00 15 30
Lpo/Lpu	N6 N20	45 02 15 32
Np		47 04 17 34
Olo/Olu	N8 M13 N52	50 07 20 37

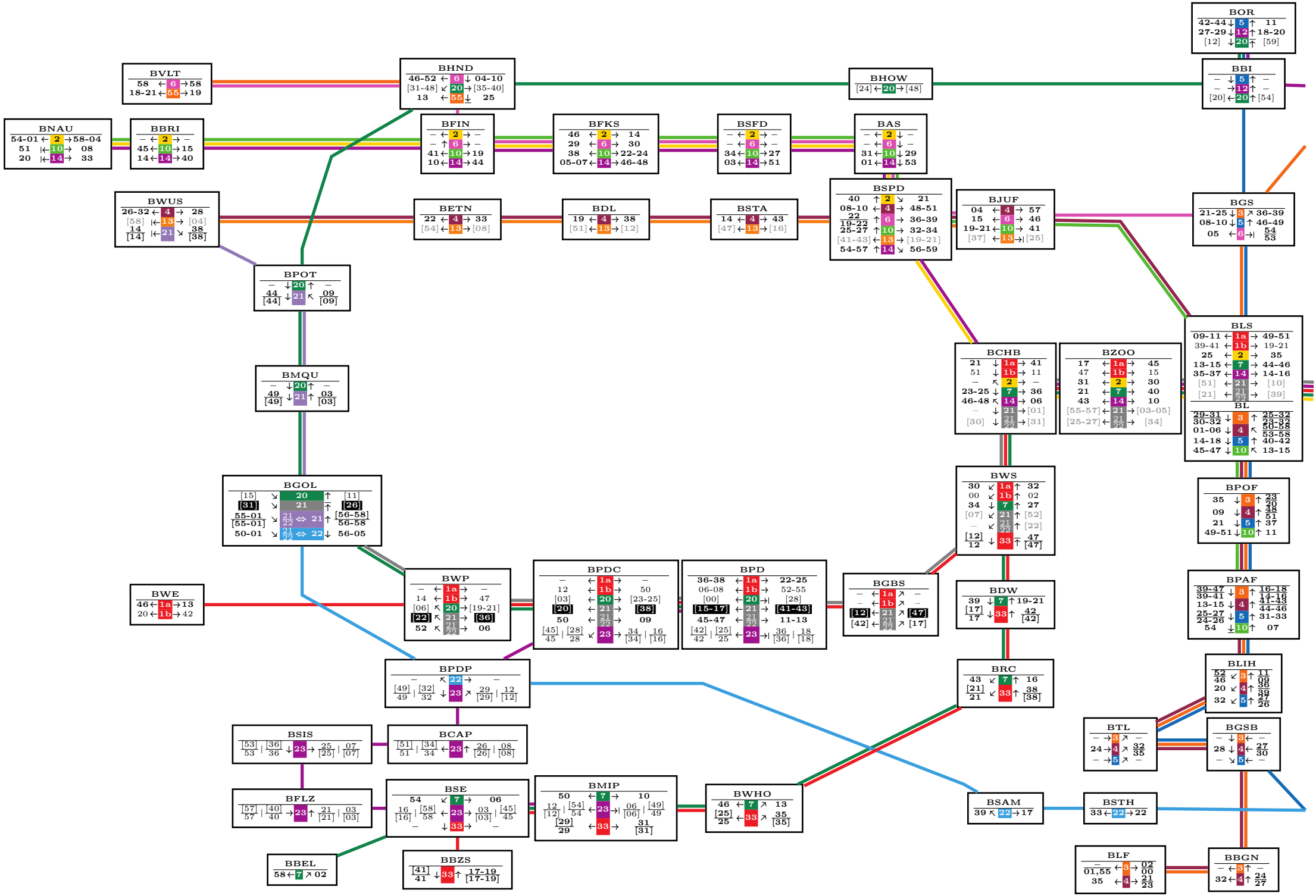
BOR
42-44 ↓ 5 ↑ 11
27-29 ↓ 12 ↑ 18-20
[12] ↓ 20 ↑ [59]
BVLT
58 ← 6 → 58
18-21 ← 55 → 19
BHND
46-52 ← 6 ↓ 04-10
[31-48] ↙ 20 → [35-40]
13 ← 55 ↓ 25
BHOW
[24] ← 20 → [48]
BBI
– ↓ 5 ↑ –
– → 12 ↑ –
[20] ← 20 ↑ [54]
BNAU
54-01 ← 2 → 58-04
51 |← 10 → 08
20 |← 14 → 33
BBRI
– ← 2 → –
45 ← 10 → 15
14 ← 14 → 40
BFIN
– ← 2 → –
– ↑ 6 → –
41 ← 10 → 19
10 ← 14 → 44
BFKS
46 ← 2 → 14
29 ← 6 → 30
38 ← 10 → 22-24
05-07 ← 14 → 46-48
BSFD
– ← 2 → –
– ← 6 → –
34 ← 10 → 27
03 ← 14 → 51
BAS
– ← 2 ↓ –
– ← 6 ↓ –
31 ← 10 ↓ 29
01 ← 14 ↓ 53
BSPD
40 ↑ 2 ↘ 21
08-10 ← 4 → 48-51
22
19-22 ↑ 6 → 36-39
25-27 ↑ 10 → 32-34
[41-43] ← 13 → [19-21]
54-57 ↑ 14 ↘ 56-59
BJUF
04 ← 4 → 57
15 ← 6 → 46
19-21 ← 10 → 41
[37] ← 13 →| [25]
BGS
21-25 ↓ 3 ↗ 36-39
08-10 ↓ 5 ↑ 46-49
05 ← 6 →| 54
53
BWUS
26-32 ← 4 → 28
[58] |← 13 → [04]
14 |← 21 ↘ 38
[14] [38]
BETN
22 ← 4 → 33
[54] ← 13 → [08]
BDL
19 ← 4 → 38
[51] ← 13 → [12]
BSTA
14 ← 4 → 43
[47] ← 13 → [16]
BPOT
– ↓ 20 ↑ –
44 ↓ 21 ↖ 09
[44] [09]
BCHB
21 ↓ 1a → 41
51 ↓ 1b → 11
– ↖ 2 → –
23-25 ↓ 7 → 36
46-48 ↖ 14 → 06
– ↓ 21 → [01]
[30] ↓ 21/22 → [31]
BZOO
17 ← 1a → 45
47 ← 1b → 15
31 ← 2 → 30
21 ← 7 → 40
43 ← 14 → 10
[55-57] ← 21 → [03-05]
[25-27] ← 21/22 → [34]
BLS
09-11 ← 1a → 49-51
39-41 ← 1b → 19-21
25 ← 2 → 35
13-15 ← 7 → 44-46
35-37 ← 14 → 14-16
[51] ← 21 → [10]
[21] ← 21/22 → [39]
BL
29-31 ↓ 3 ↑ 25-32
30-32 ↓ 4 ↖ 22-27
01-06 ↓ 5 ↑ 50-52
14-18 ↓ 10 ↖ 53-58
45-47 ↓ 40-42
13-15
BMQU
– ↓ 20 ↑ –
49 ↓ 21 ↑ 03
[49] [03]
BWS
30 ↙ 1a ↑ 32
00 ↙ 1b ↑ 02
34 ↓ 7 ↑ 27
[07] ↙ 21 ↑ [52]
– ↙ 21/22 ↑ [22]
[12] ↓ 33 ↑ 47
12 [47]
BPOF
35 ↓ 3 ↑ 23
09 ↓ 4 ↑ 20
21 ↓ 5 ↑ 48
49-51 ↓ 10 ↑ 37
11
BGOL
[15] ↘ 20 ↑ [11]
[31] ↘ 21 ↑ [26]
55-01 ↘ 21/22 ⇔ 21 ↑ [56-58]
[55-01] 56-58
50-01 ↘ 21/22 ⇔ 22 ↓ 56-05
BWP
– ← 1a → –
14 ← 1b → 47
[06] ↖ 20 → [19-21]
[22] ↖ 21 → [36]
52 ↖ 21/22 → 06
BPDC
– ← 1a → –
12 ← 1b → 50
[03] ← 20 → [23-25]
[20] ← 21 → [38]
50 ← 21/22 → 09
[45]/45 | [28]/28 ↙ 23 → 34/[34] | 16/[16]
BPD
36-38 ← 1a → 22-25
06-08 ← 1b → 52-55
[00] ← 20 →| [28]
[15-17] ← 21 → [41-43]
45-47 ← 21/22 → 11-13
[42]/42 | [25]/25 ← 23 →| 36/[36] | 18/[18]
BGBS
– ← 1a ↗ –
– ← 1b ↗ –
[12] ← 21 ↗ [47]
[42] ← 21/22 ↗ [17]
BDW
39 ↓ 7 ↑ 19-21
[17] 42
17 ↓ 33 ↑ [42]
BPAF
39-47 ↓ 3 ↑ 16-18
39-41 ↓ 4 ↑ 14-16
13-15 ↓ 41-43
25-27 44-46
24-26 ↓ 5 ↑ 31-33
54 ↓ 10 ↑ 07
BWE
46 ← 1a → 13
20 ← 1b → 42
BPDP
– ↖ 22 → –
[49]/49 | [32]/32 ↓ 23 ↗ 29/[29] | 12/[12]
BRC
43 ↙ 7 ↑ 16
[21] 38
21 ↙ 33 ↑ [38]
BLIH
52 ↙ 3 ↑ 11
46 09
20 ↙ 4 ↑ 36
39
32 ↙ 5 ↑ 27
26
BSIS
[53]/53 | [36]/36 ↓ 23 → 25/[25] | 07/[07]
BCAP
[51]/51 | [34]/34 ← 23 ↑ 26/[26] | 08/[08]
BTL
– → 3 ↗ –
24 → 4 ↗ 32
35
– → 5 ↗ –
BGSB
– ↓ 3 ← –
28 ↓ 4 ← 27
30
– ↘ 5 ← –
BFLZ
[57]/57 | [40]/40 → 23 ↑ 21/[21] | 03/[03]
BSE
54 ↙ 7 → 06
16/[16] | [58]/58 ← 23 → 03/[03] | [45]/45
– ↓ 33 → –
BMIP
50 ← 7 → 10
12/[12] | [54]/54 ← 23 →| 06/[06] | [49]/49
[29]
29 ← 33 → 31
[31]
BWHO
46 ← 7 ↗ 13
[25] 35
25 ← 33 ↗ [35]
BSAM
39 ↖ 22 → 17
BSTH
33 ← 22 → 22
BBEL
58 ← 7 ↗ 02
BBZS
[41]/41 ↓ 33 ↑ 17-19
[17-19]
BLF
–
01,55 ← 3 → 02
00
35 ← 4 → 21
23
BBGN
– ← 3 ↑ –
32 ← 4 ↑ 24
27

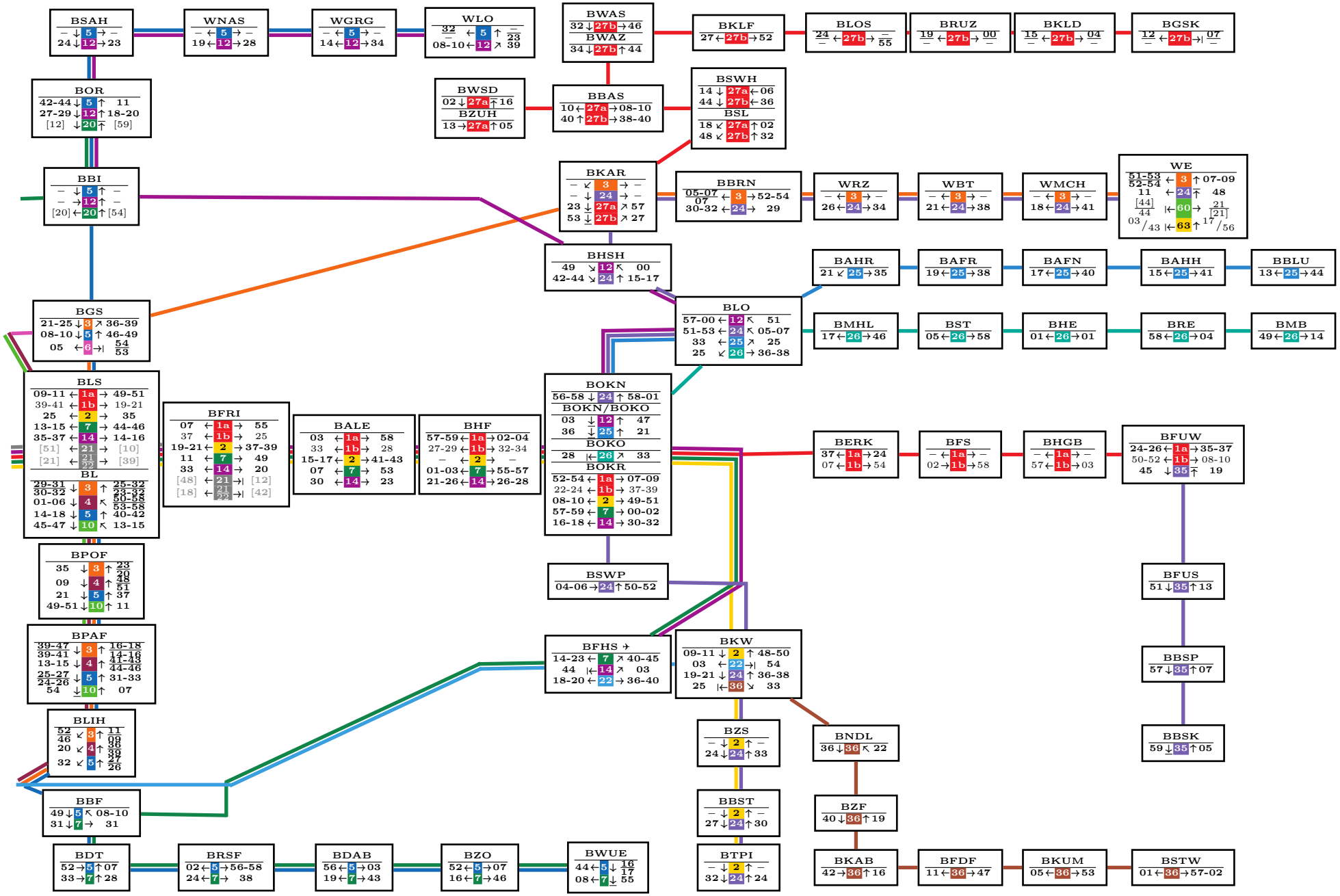
BSAH
WNAS
WGRG
WLO
BWAS
BWAZ
BKLF
BLOS
BRUZ
BKLD
BGSK
BOR
BWSD
BZUH
BBAS
BSWH
BSL
BBI
BKAR
BBRN
WRZ
WBT
WMCH
WE
BHSH
BAHR
BAFR
BAFN
BAHH
BBLU
BGS
BLO
BMHL
BST
BHE
BRE
BMB
BLS
BL
BFRI
BALE
BHF
BOKN
BOKN/BOKO
BOKR
BERK
BFS
BHGB
BFUW
BPOF
BSWP
BFUS
BPAF
BFHS
BKW
BBSP
BLIH
BZS
BNDL
BBSK
BBF
BBST
BZF
BTPI
BKAB
BFDF
BKUM
BSTW
BDT
BRSF
BDAB
BZO
BWUE

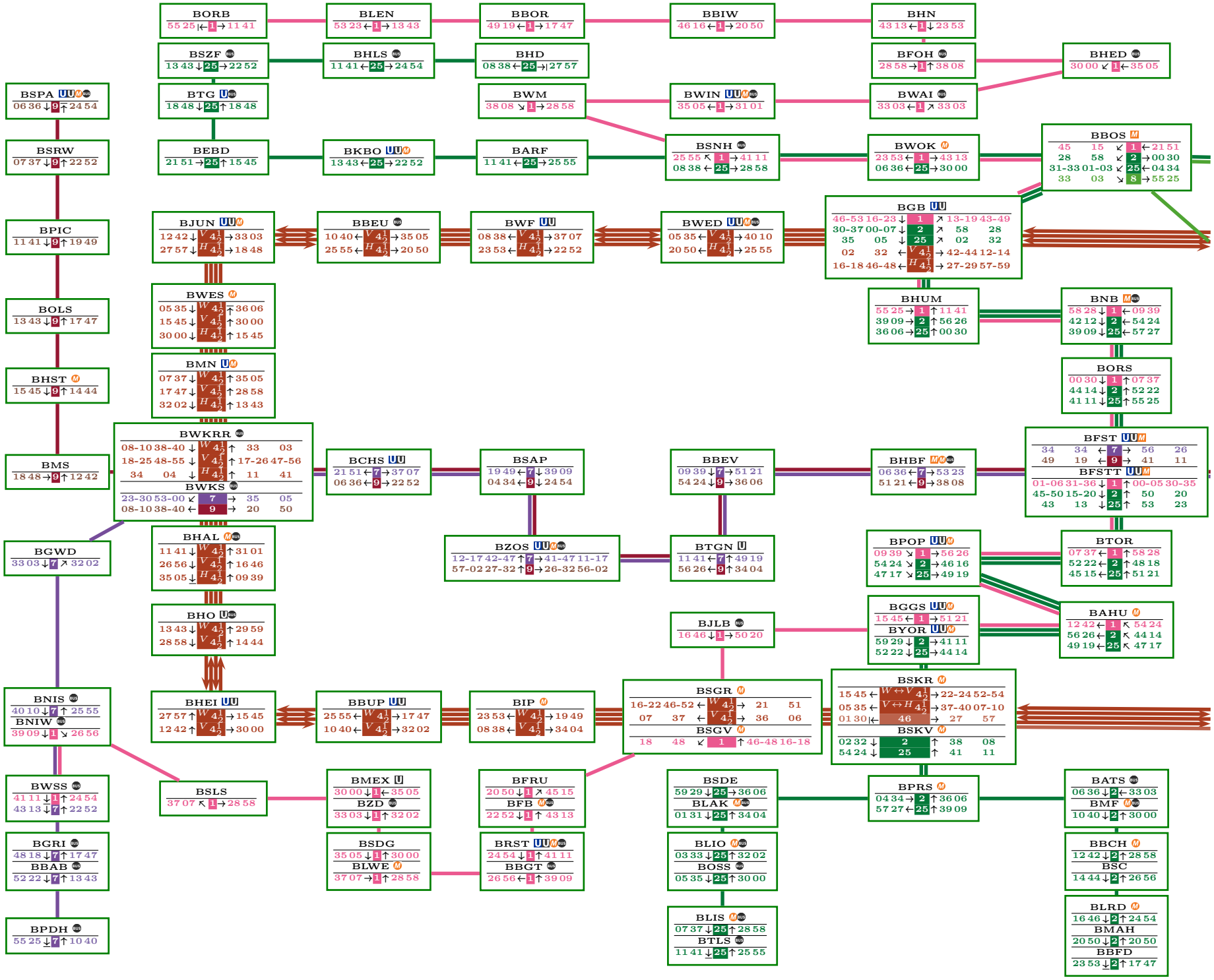
BORB
BLEN
BBOR
BBIW
BHN
BSZF
BHLS
BHD
BFOH
BHED
BSPA
BTG
BWM
BWIN
BWAI
BSRW
BEBD
BKBO
BARF
BSNH
BWOK
BBOS
BPIC
BJUN
BBEU
BWF
BWED
BGB
BHUM
BNB
BOLS
BWES
BMN
BORS
BHST
BWKRR
BWKS
BCHS
BSAP
BBEV
BHBF
BFST
BFSTT
BMS
BHAL
BZOS
BTGN
BPOP
BTOR
BGWD
BHO
BJLB
BGGS
BYOR
BAHU
BNIS
BNIW
BHEI
BBUP
BIP
BSGR
BSGV
BSKR
BSKV
BWSS
BSLS
BMEX
BZD
BFRU
BFB
BSDE
BLAK
BPRS
BATS
BMF
BGRI
BBAB
BSDG
BLWE
BRST
BBGT
BLIO
BOSS
BBCH
BSC
BPDH
BLIS
BTLS
BLRD
BMAH
BBFD

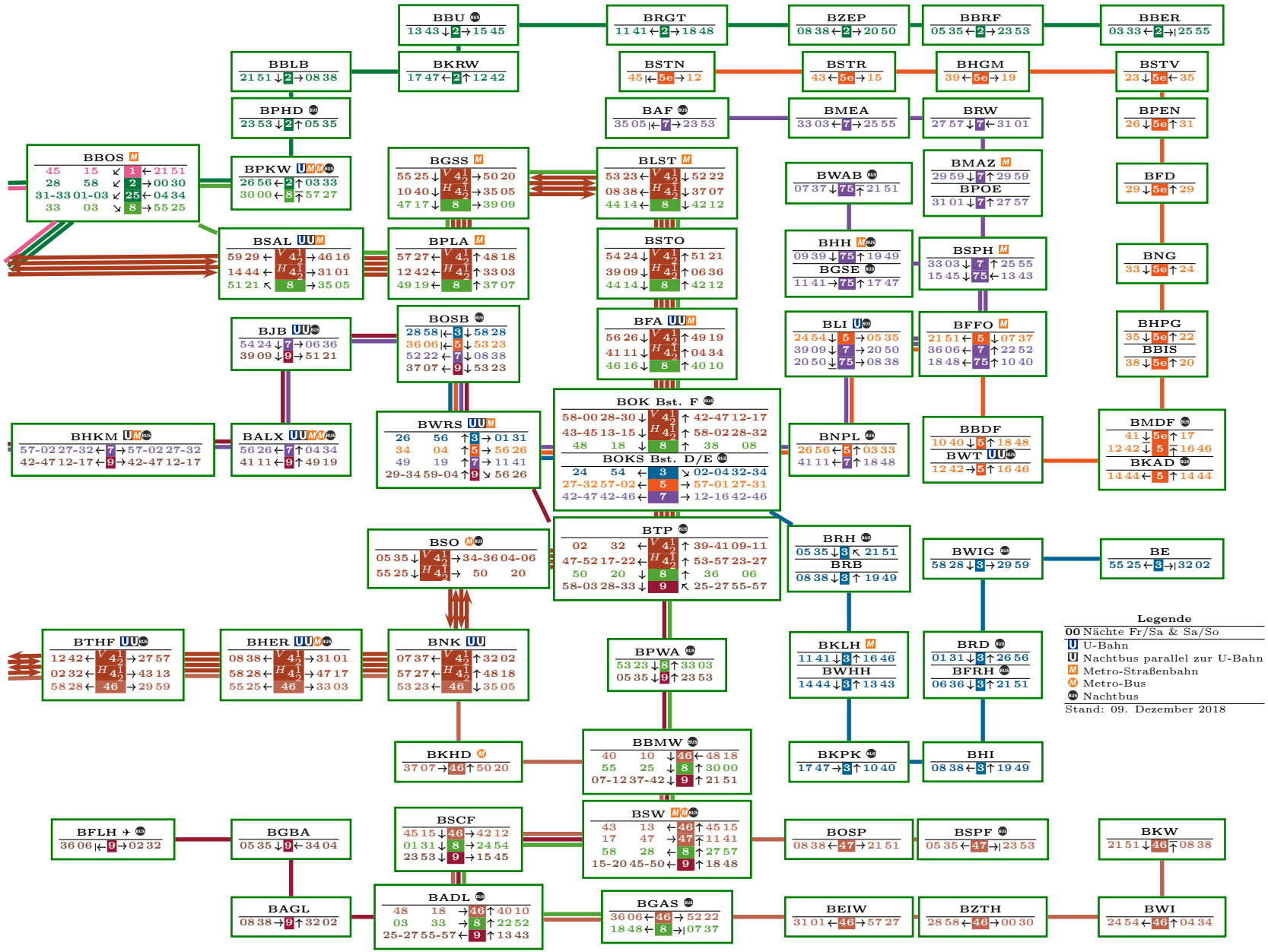
BBU
13 43 ↓ 2 → 15 45
BRGT
11 41 ← 2 → 18 48
BZEP
08 38 ← 2 → 20 50
BBRF
05 35 ← 2 → 23 53
BBER
03 33 ← 2 →| 25 55
BBLB
21 51 ↓ 2 → 08 38
BKRW
17 47 ← 2 ↑ 12 42
BSTN
45 |← 5e → 12
BSTR
43 ← 5e → 15
BHGM
39 ← 5e → 19
BSTV
23 ↓ 5e ← 35
BPHD
23 53 ↓ 2 ↑ 05 35
BAF
35 05 |← 7 → 23 53
BMEA
33 03 ← 7 → 25 55
BRW
27 57 ↓ 7 ← 31 01
BPEN
26 ↓ 5e ↑ 31
BBOS M
45 15 ↙ 1 ← 21 51
28 58 ↙ 2 → 00 30
31-33 01-03 ↙ 25 ← 04 34
33 03 ↘ 8 → 55 25
BPKW U M M
26 56 ← 2 ↑ 03 33
30 00 ← 8 ↑ 57 27
BGSS M
55 25 ↓ V 4 1/2 → 50 20
10 40 ↓ H 4 1/2 → 35 05
47 17 ↓ 8 → 39 09
BLST M
53 23 ← V 4 1/2 ↓ 52 22
08 38 ← H 4 1/2 ↓ 37 07
44 14 ← 8 ↓ 42 12
BWAB
07 37 ↓ 75 ↑ 21 51
BMAZ M
29 59 ↓ 7 ↑ 29 59
BPOE
31 01 ↓ 7 ↑ 27 57
BFD
29 ↓ 5e ↑ 29
BSAL U U M
59 29 ← V 4 1/2 → 46 16
14 44 ← H 4 1/2 → 31 01
51 21 ↖ 8 → 35 05
BPLA M
57 27 ← V 4 1/2 ↑ 48 18
12 42 ← H 4 1/2 ↑ 33 03
49 19 ← 8 ↑ 37 07
BSTO
54 24 ↓ V 4 1/2 ↑ 51 21
39 09 ↓ H 4 1/2 ↑ 06 36
44 14 ↓ 8 ↑ 42 12
BHH M
09 39 ↓ 75 ↑ 19 49
BGSE
11 41 → 75 ↑ 17 47
BSPH M
33 03 ↓ 7 ↑ 25 55
15 45 ↓ 75 ← 13 43
BNG
33 ↓ 5e ↑ 24
BJB U U
54 24 ↓ 7 → 06 36
39 09 ↓ 9 → 51 21
BOSB
28 58 |← 3 ↓ 58 28
36 06 |← 5 ↓ 53 23
52 22 ← 7 ↓ 08 38
37 07 ← 9 ↓ 53 23
BFA U U M
56 26 ↓ V 4 1/2 ↑ 49 19
41 11 ↓ H 4 1/2 ↑ 04 34
46 16 ↓ 8 ↑ 40 10
BLI U
24 54 ↓ 5 → 05 35
39 09 ↓ 7 → 20 50
20 50 ↓ 75 → 08 38
BFFO M
21 51 ← 5 ↓ 07 37
36 06 ← 7 ↑ 22 52
18 48 ← 75 ↑ 10 40
BHPG
35 ↓ 5e ↑ 22
BBIS
38 ↓ 5e ↑ 20
BHKM U M
57-02 27-32 ← 7 → 57-02 27-32
42-47 12-17 ← 9 → 42-47 12-17
BALX U U M M
56 26 ← 7 ↑ 04 34
41 11 ← 9 ↑ 49 19
BWRS U U M
26 56 ↑ 3 → 01 31
34 04 ↑ 5 → 56 26
49 19 ↑ 7 → 11 41
29-34 59-04 ↑ 9 ↘ 56 26
BOK Bst. F
58-00 28-30 ↓ V 4 1/2 ↑ 42-47 12-17
43-45 13-15 ↓ H 4 1/2 ↑ 58-02 28-32
48 18 ↓ 8 ↑ 38 08
BOKS Bst. D/E
24 54 ← 3 ↘ 02-04 32-34
27-32 57-02 ← 5 → 57-01 27-31
42-47 42-46 ← 7 → 12-16 42-46
BNPL
26 56 ← 5 ↑ 03 33
41 11 ← 7 ↑ 18 48
BBDF
10 40 ↓ 5 ↑ 18 48
BWT U U
12 42 → 5 ↑ 16 46
BMDF
41 ↓ 5e ↑ 17
12 42 ↓ 5 ↑ 16 46
BKAD
14 44 ← 5 ↑ 14 44
BSO M
05 35 ↓ V 4 1/2 → 34-36 04-06
55 25 ↓ H 4 1/2 → 50 20
BTP
02 32 ← V 4 1/2 ↑ 39-41 09-11
47-52 17-22 ← H 4 1/2 ↑ 53-57 23-27
50 20 ↓ 8 ↑ 36 06
58-03 28-33 ↓ 9 ↖ 25-27 55-57
BRH
05 35 ↓ 3 ↖ 21 51
BRB
08 38 ↓ 3 ↑ 19 49
BWIG
58 28 ↓ 3 → 29 59
BE
55 25 ← 3 →| 32 02
BTHF U U
12 42 ← V 4 1/2 → 27 57
02 32 ← H 4 1/2 → 43 13
58 28 ← 46 → 29 59
BHER U U M M
08 38 ← V 4 1/2 → 31 01
58 28 ← H 4 1/2 → 47 17
55 25 ← 46 → 33 03
BNK U U
07 37 ← V 4 1/2 ↑ 32 02
57 27 ← H 4 1/2 ↑ 48 18
53 23 ← 46 ↓ 35 05
BPWA
53 23 ↓ 8 ↑ 33 03
05 35 ↓ 9 ↑ 23 53
BKLH M
11 41 ↓ 3 ↑ 16 46
BWHH
14 44 ↓ 3 ↑ 13 43
BRD
01 31 ↓ 3 ↑ 26 56
BFRH
06 36 ↓ 3 ↑ 21 51
BKHD M
37 07 → 46 ↑ 50 20
BBMW
40 10 ↓ 46 ← 48 18
55 25 ↓ 8 ↑ 30 00
07-12 37-42 ↓ 9 ↑ 21 51
BKPK
17 47 → 3 ↑ 10 40
BHI
08 38 ← 3 ↑ 19 49
BFLH ✈
36 06 |← 9 → 02 32
BGBA
05 35 ↓ 9 ← 34 04
BSCF
45 15 ↓ 46 → 42 12
01 31 ↓ 8 → 24 54
23 53 ↓ 9 → 15 45
BSW M M
43 13 ← 46 ↑ 45 15
17 47 → 47 ↑ 11 41
58 28 ← 8 ↑ 27 57
15-20 45-50 ← 9 ↑ 18 48
BOSP
08 38 ← 47 → 21 51
BSPF
05 35 ← 47 →| 23 53
BKW
21 51 ↓ 46 ↑ 08 38
BAGL
08 38 → 9 ↑ 32 02
BADL
48 18 → 46 ↑ 40 10
03 33 → 8 ↑ 22 52
25-27 55-57 ← 9 ↑ 13 43
BGAS
36 06 ← 46 → 52 22
18 48 ← 8 →| 07 37
BEIW
31 01 ← 46 → 57 27
BZTH
28 58 ← 46 → 00 30
BWI
24 54 ← 46 ↑ 04 34
Legende
00 Nächte Fr/Sa & Sa/So
U U-Bahn
U Nachtbus parallel zur U-Bahn
M Metro-Straßenbahn
M Metro-Bus
Nachtbus
Stand: 09. Dezember 2018

S1 (Fr/Sa)				S1 (Sa/So)				S1 (Fr/Sa)				S1 (Sa/So)			
BWSS	00:54	30	04:24	00:54	30	06:24		BORB	01:11	30	03:41	01:11	30	05:41	
BORB	02:25		05:55	02:25		07:55		BWSS	02:41		05:11	02:41		07:11	

S2 (Fr/Sa)				S2 (Sa/So)				S2 (Fr/Sa)				S2 (Sa/So)			
BBFD	00:47	30	04:17	00:47	30	06:17		BBER	01:03	30	03:03	01:03	30	05:03	
BBER	01:55		05:25	01:55		07:25		BBFD	02:23		04:23	02:23		06:23	

S25 (Fr/Sa)				S25 (Sa/So)				S25 (Fr/Sa)				S25 (Sa/So)			
BTLS	00:55	30	04:25	00:55	30	05:55		BHD	01:08	30	04:38	01:08	30	06:38	
BHD	01:57		05:27	01:57		06:57		BTLS	02:11		05:41	02:11		07:41	

S5 (Fr/Sa)				S5 (Sa/So)				S5 (Fr/Sa)				S5 (Sa/So)			
BMDF	01:12	30	04:12	01:12	30	06:12		BOSB	01:23	30	04:23	01:23	30	06:23	
BOSB	01:36		04:36	01:36		06:36		BMDF	01:46		04:46	01:46		06:46	

S7 (Fr/Sa)				S7 (Sa/So)				S7 (Fr/Sa)				S7 (Sa/So)			
BAF	01:23	30	03:53	01:23	30	05:53		BPDH	00:40	30	03:40	00:40	30	05:40	
BPDH	02:55		05:25	02:55		07:25		BAF	02:05		05:05	02:05		07:05	

S75 (Fr/Sa)				S75 (Sa/So)				S75 (Fr/Sa)				S75 (Sa/So)			
BWAB	01:37	30	04:07	01:37	30	06:07		BLI	01:38	30	04:38	01:38	30	06:38	
BLI	01:50		04:20	01:50		06:20		BWAB	01:51		04:51	01:51		06:51	

S3 (Fr/Sa)				S3 (Sa/So)				S3 (Fr/Sa)				S3 (Sa/So)			
BE	00:55	30	03:55	00:55	30	05:55		BOSB	01:28	30	04:58	01:34	30	06:58	
BOSB	01:28		04:28	01:28		06:28		BE	02:02		05:32	02:02		07:32	

S9 (Fr/Sa)				S9 (Sa/So)				S9 (Fr/Sa)				S9 (Sa/So)			
BFLH	01:02	30	04:02	01:02	30	06:02		BSPA	01:06	30	03:06	01:06	30	03:06	
BSPA	02:24		05:24	02:24		07:24		BFLH	02:36		04:36	02:36		06:36	

S5 (Fr/Sa)								S5 (Sa/So)								S5 (Fr/Sa)								S5 (Sa/So)							
BSTN		01:09	02:12	03:12					01:09	02:12	60	05:12				BMDF	02:17	60	04:17					02:17	60	06:17					
BST	00:40	01:23	02:23	03:23				00:40	01:23	02:23		05:23				BST	02:35		04:35					02:35		06:35					
BMDF	01:00	01:41	02:41	03:41				01:00	01:41	02:41		05:41				BSTN	02:45		04:45					02:45		06:45					

S8 (Fr/Sa)				S8 (Sa/So)				S8 (Fr/Sa)				S8 (Sa/So)			
BGAS	00:48	30	03:48	00:48	30	03:48		BPKW	01:30	30	04:30	01:30	30	04:30	
BPKW	01:26		04:26	01:26		04:26		BGAS	02:07		05:07	02:07		05:07	

S46 (Fr/Sa)				S46 (Sa/So)				S46 (Fr/Sa)				S46 (Sa/So)			
BKW	00:51	30	04:21	00:51	30	05:51		BSKR	01:27	30	03:57	01:27	30	03:57	
BSKR	01:30		05:00	01:30		06:30		BKW	02:08		04:38	02:08		04:38	

S47 (Fr/Sa)				S47 (Sa/So)				S47 (Fr/Sa)				S47 (Sa/So)			
BSPF	01:35	30	04:35	01:35	30	06:35		BSW	01:47	30	04:47	01:47	30	06:47	
BSW	01:41		04:41	01:41		06:41		BSPF	01:53		04:53	01:53		06:53	

S41 A (Fr/Sa)

von	⟲	⟲	⟲	⟲	⟲	⟲		⟲	⟲		⟲	⟲		HAL	⟲		HAL	⟲		HAL	⟲		HAL	⟲		HAL	⟲	HAL	⟲		HAL	
BSKR	00:26	00:36	00:46	00:56	01:06	01:16		01:35	01:46		02:05	02:15		02:35	02:45		03:05	03:15		03:35	03:45		04:05	04:15	04:35	04:46	04:56	05:06		
BSGR o	00:27	00:37	00:47	00:57	01:07	01:17		01:36	01:47		02:06	02:16		02:36	02:46		03:06	03:16		03:36	03:46		04:06	04:16	04:36	04:47	04:57	05:06		
BSGR	00:28	00:38	00:48	00:58	01:08	01:22		01:37	01:52		02:07	02:22		02:37	02:52		03:07	03:22		03:37	03:52		04:07	04:22	04:37	04:48	04:58	05:07		
BHAL	00:37	00:47	00:57	01:07	01:17	01:31	01:39	01:46	02:01	02:09	02:16	02:31	02:39	02:46	03:01	03:09	03:16	03:31	03:39	03:46	04:01	04:09	04:16	04:31	04:46	04:57	05:07	05:16		
BWKRR o	00:38	00:48	00:58	01:08	01:18	01:32	01:40	01:47	02:02	02:10	02:17	02:32	02:40	02:47	03:02	03:10	03:17	03:32	03:40	03:47	04:02	04:10	04:17	04:32	04:47	04:58	05:08	05:17		
BWKRR	00:39	00:49	00:59	01:11	01:26	01:33	01:41	01:56	02:03	02:11	02:26	02:33	02:41	02:56	03:03	03:11	03:26	03:33	03:41	03:56	04:03	04:11	04:26	04:39	04:49	04:59	05:09	05:19		
BWES	00:42	00:52	01:02	01:15	01:30	01:36	01:45	02:00	02:06	02:15	02:30	02:36	02:45	03:00	03:06	03:15	03:30	03:36	03:45	04:00	04:06	04:15	04:30	04:42	04:52	05:02	05:12	05:22		
BGB o	00:55	01:05	01:15	01:27	01:42		01:57	02:12		02:27	02:42		02:57	03:12		03:27	03:42		03:57	04:12		04:27	04:42	04:55	05:05	05:15	05:25	05:35		
BGB	00:59		01:15	01:29	01:44		01:59	02:14		02:29	02:44		02:59	03:14		03:29	03:44		03:59	04:14		04:29	04:45	04:55	05:05	05:15	05:25	05:35		
BOK o	01:13		01:30	01:43	01:58		02:13	02:28		02:43	02:58		03:13	03:28		03:43	03:58		04:13	04:28		04:43	05:00	05:10	05:20	05:30	05:40	05:50		
BOK	01:15		01:31	01:45	02:00		02:15	02:30		02:45	03:00		03:15	03:30		03:45	04:00		04:15	04:30		04:45	05:01	05:11	05:21	05:31	05:41	05:51		
BTP o	01:17		01:32	01:47	02:01		02:17	02:31		02:47	03:01		03:17	03:31		03:47	04:01		04:17	04:31		04:47	05:02	05:12	05:22	05:32	05:42	05:52		
BTP	01:22		01:33	01:52	02:02		02:22	02:32		02:52	03:02		03:22	03:32		03:52	04:02		04:22	04:32		04:52	05:03	05:13	05:23	05:33	05:43	05:53		
BSKR o	01:34		01:45	02:04	02:14		02:34	02:44		03:04	03:14		03:34	03:44		04:04	04:14		04:34	04:44		05:04	05:15	05:25	05:35	05:45	05:55	05:05		
nach	⟲		WES	⟲	WES		⟲	WES		⟲	WES		⟲	WES		⟲	⟲		⟲	⟲		⟲	⟲	⟲	⟲	⟲	⟲	⟲		

S41 A (Sa/So)

von	⟲	⟲	⟲	⟲	⟲		⟲	⟲		⟲	⟲		HAL	⟲		HAL	⟲		HAL	⟲		HAL	⟲	HAL	⟲	HAL	⟲	⟲	⟲
BSKR	00:26	00:46	00:56	01:06	01:16		01:35	01:46		02:05	02:15		02:35	02:45		03:05	03:15		03:35	03:45		04:05	04:15	04:35	04:45	05:05	05:15	05:35	05:45
BSGR o	00:27	00:47	00:57	01:07	01:17		01:36	01:47		02:06	02:16		02:36	02:46		03:06	03:16		03:36	03:46		04:06	04:16	04:36	04:46	05:06	05:16	05:36	05:46
BSGR	00:28	00:48	00:58	01:08	01:22		01:37	01:52		02:07	02:22		02:37	02:52		03:07	03:22		03:37	03:52		04:07	04:22	04:37	04:52	05:07	05:22	05:37	05:52
BHAL	00:37	00:57	01:07	01:17	01:31	01:39	01:46	02:01	02:09	02:16	02:31	02:39	02:46	03:01	03:09	03:16	03:31	03:39	03:46	04:01	04:09	04:16	04:31	04:46	05:01	05:16	05:31	05:46	06:01
BWKRR o	00:38	00:58	01:08	01:18	01:32	01:40	01:47	02:02	02:10	02:17	02:32	02:40	02:47	03:02	03:10	03:17	03:32	03:40	03:47	04:02	04:10	04:17	04:32	04:47	05:02	05:17	05:32	05:47	06:02
BWKRR	00:39	00:59	01:11	01:26	01:33	01:41	01:56	02:03	02:11	02:26	02:33	02:41	02:56	03:03	03:11	03:26	03:33	03:41	03:56	04:03	04:11	04:26	04:41	04:56	05:11	05:26	05:41	05:56	06:09
BWES	00:42	01:02	01:15	01:30	01:36	01:45	02:00	02:06	02:15	02:30	02:36	02:45	03:00	03:06	03:15	03:30	03:36	03:45	04:00	04:06	04:15	04:30	04:45	05:00	05:15	05:30	05:45	06:00	06:12
BGB o	00:55	01:15	01:27	01:42		01:57	02:12		02:27	02:42		02:57	03:12		03:27	03:42		03:57	04:12		04:27	04:42	04:57	05:12	05:27	05:42	05:57	06:12	06:25
BGB	00:59	01:15	01:29	01:44		01:59	02:14		02:29	02:44		02:59	03:14		03:29	03:44		03:59	04:14		04:29	04:44	04:59	05:14	05:29	05:44	05:59	06:14	06:25
BOK o	01:13	01:30	01:43	01:58		02:13	02:28		02:43	02:58		03:13	03:28		03:43	03:58		04:13	04:28		04:43	04:58	05:13	05:28	05:43	05:58	06:13	06:28	06:40
BOK	01:15	01:31	01:45	02:00		02:15	02:30		02:45	03:00		03:15	03:30		03:45	04:00		04:15	04:30		04:45	05:00	05:15	05:30	05:45	06:00	06:15	06:30	06:41
BTP o	01:17	01:32	01:47	02:01		02:17	02:31		02:47	03:01		03:17	03:31		03:47	04:01		04:17	04:31		04:47	05:01	05:17	05:31	05:47	06:01	06:17	06:31	06:42
BTP	01:22	01:33	01:52	02:02		02:22	02:32		02:52	03:02		03:22	03:32		03:52	04:02		04:22	04:32		04:52	05:02	05:22	05:32	05:52	06:02	06:22	06:33	06:43
BSKR o	01:34	01:45	02:04	02:14		02:34	02:44		03:04	03:14		03:34	03:44		04:04	04:14		04:34	04:44		05:04	05:14	05:34	05:44	06:04	06:14	06:34	06:45	06:55
nach	⟲	WES	⟲	WES		⟲	WES		⟲	WES		⟲	WES		⟲	⟲		⟲	⟲		⟲	⟲	⟲	⟲	⟲	⟲	⟲	⟲	⟲

S42 R (Fr/Sa)

von	⟲	⟲	⟲	⟲	⟲	⟲		⟲	⟲		⟲	⟲		WES	⟲		⟲	⟲		WES	⟲	WES		WES		⟲	⟲					
BSKR	00:20	00:30	00:40	00:50	01:00	01:10		01:24	01:40		01:54	02:10		02:24	02:40		02:54	03:10		03:24	03:40	03:54	04:10	04:24		04:40	04:54					
BTP o	00:33	00:43	00:53	01:03	01:13	01:23		01:39	01:54		02:09	02:24		02:39	02:54		03:09	03:24		03:39	03:54	04:09	04:24	04:39		04:54	05:09					
BTP	00:33	00:43	00:53	01:03	01:13	01:27		01:41	01:57		02:11	02:27		02:41	02:57		03:11	03:27		03:41	03:57	04:11	04:27	04:41		04:57	05:11					
BOK o	00:35	00:45	00:55	01:05	01:15	01:28		01:42	01:58		02:12	02:28		02:42	02:58		03:12	03:28		03:42	03:58	04:12	04:28	04:42		04:58	05:12					
BOK	00:36	00:46	00:56	01:06	01:16	01:32		01:47	02:02		02:17	02:32		02:47	03:02		03:17	03:32		03:47	04:02	04:17	04:32	04:46		05:02	05:16					
BGB o	00:50	01:00	01:10	01:20	01:30	01:46		02:01	02:16		02:31	02:46		03:01	03:16		03:31	03:46		04:01	04:16	04:31	04:46	05:00		05:16	05:30					
BGB	00:51	01:01	01:11	01:21	01:31	01:48		02:02	02:18		02:32	02:48		03:02	03:18		03:32	03:48		04:02	04:18	04:32	04:48	05:01		05:18	05:31					
BWES	01:03	01:13	01:23	01:33	01:43	02:00	02:05	02:15	02:30	02:35	02:45	03:00	03:05	03:15	03:30	03:35	03:45	04:00	04:05	04:15	04:30	04:45	05:00	05:13	05:23	05:30	05:43					
BWKRR o	01:07	01:17	01:27	01:37	01:47	02:03	02:08	02:18	02:33	02:38	02:48	03:03	03:08	03:18	03:33	03:38	03:48	04:03	04:08	04:18	04:33	04:48	05:03	05:17	05:27	05:33	05:47					
BWKRR	01:10	01:25	01:27	01:40	01:55	02:04	02:10	02:25	02:34	02:40	02:55	03:04	03:10	03:25	03:34	03:40	03:55	04:04	04:10	04:25	04:40	04:55	05:07	05:17	05:27	05:37	05:47					
BHAL	01:11	01:26	01:28	01:41	01:56	02:05	02:11	02:26	02:35	02:41	02:56	03:05	03:11	03:26	03:35	03:41	03:56	04:05	04:11	04:26	04:41	04:56	05:09	05:19	05:29	05:39	05:49					
BSGR o	01:20	01:35		01:50	02:05		02:20	02:35		02:50	03:05		03:20	03:35		03:50	04:05		04:20	04:35	04:50	05:05	05:18	05:28	05:38	05:48	05:58					
BSGR	01:21	01:36		01:51	02:06		02:21	02:36		02:51	03:06		03:21	03:36		03:51	04:06		04:21	04:36	04:51	05:06	05:18	05:28	05:38	05:48	05:58					
BSKR o	01:22	01:37		01:52	02:07		02:22	02:37		02:52	03:07		03:22	03:37		03:52	04:07		04:22	04:37	04:52	05:07	05:20	05:30	05:40	05:50	06:00					
nach	⟲	HAL			HAL		⟲	HAL		⟲	HAL		⟲	⟲		⟲	⟲		⟲	⟲	⟲	⟲	⟲	⟲	⟲	⟲	⟲					

S42 R (Sa/So)

von	⟲	⟲	⟲	⟲	⟲	⟲		⟲	⟲		⟲	⟲		WES	⟲		WES	⟲		WES	⟲	WES	⟲	WES	⟲	⟲	⟲	⟲	⟲	⟲		⟲	⟲
BSKR	00:20	00:30	00:40	00:50	01:00	01:10		01:24	01:40		01:54	02:10		02:24	02:40		02:54	03:10		03:24	03:40	03:54	04:10	04:24	04:40	04:54	05:10	05:24	05:40	05:54		06:10	06:24
BTP o	00:33	00:43	00:53	01:03	01:13	01:23		01:39	01:54		02:09	02:24		02:39	02:54		03:09	03:24		03:39	03:54	04:09	04:24	04:39	04:54	05:09	05:24	05:39	05:54	06:09		06:24	06:39
BTP	00:33	00:43	00:53	01:03	01:13	01:27		01:41	01:57		02:11	02:27		02:41	02:57		03:11	03:27		03:41	03:57	04:11	04:27	04:41	04:57	05:11	05:27	05:41	05:57	06:11		06:27	06:41
BOK o	00:35	00:45	00:55	01:05	01:15	01:28		01:42	01:58		02:12	02:28		02:42	02:58		03:12	03:28		03:42	03:58	04:12	04:28	04:42	04:58	05:12	05:28	05:42	05:58	06:12		06:28	06:42
BOK	00:36	00:46	00:56	01:06	01:16	01:32		01:47	02:02		02:17	02:32		02:47	03:02		03:17	03:32		03:47	04:02	04:17	04:32	04:47	05:02	05:17	05:32	05:47	06:02	06:16		06:32	06:46
BGB o	00:50	01:00	01:10	01:20	01:30	01:46		02:01	02:16		02:31	02:46		03:01	03:16		03:31	03:46		04:01	04:16	04:31	04:46	05:01	05:16	05:31	05:46	06:01	06:16	06:30		06:46	07:00
BGB	00:51	01:01	01:11	01:21	01:31	01:48		02:02	02:18		02:32	02:48		03:02	03:18		03:32	03:48		04:02	04:18	04:32	04:48	05:02	05:18	05:32	05:48	06:02	06:18	06:31		06:48	07:01
BWES	01:03	01:13	01:23	01:33	01:43	02:00	02:05	02:15	02:30	02:35	02:45	03:00	03:05	03:15	03:30	03:35	03:45	04:00	04:05	04:15	04:30	04:45	05:00	05:15	05:30	05:45	06:00	06:15	06:30	06:43	06:53	07:00	07:13
BWKRR o	01:07	01:17	01:27	01:37	01:47	02:03	02:08	02:18	02:33	02:38	02:48	03:03	03:08	03:18	03:33	03:38	03:48	04:03	04:08	04:18	04:33	04:48	05:03	05:18	05:33	05:48	06:03	06:18	06:33	06:47	06:57	07:03	07:17
BWKRR	01:10	01:25	01:27	01:40	01:55	02:04	02:10	02:25	02:34	02:40	02:55	03:04	03:10	03:25	03:34	03:40	03:55	04:04	04:10	04:25	04:40	04:55	05:10	05:25	05:40	05:55	06:10	06:25	06:37	06:47	06:57	07:07	07:17
BHAL	01:11	01:26	01:28	01:41	01:56	02:05	02:11	02:26	02:35	02:41	02:56	03:05	03:11	03:26	03:35	03:41	03:56	04:05	04:11	04:26	04:41	04:56	05:11	05:26	05:41	05:56	06:11	06:26	06:39	06:49	06:59	07:09	07:19
BSGR o	01:20	01:35		01:50	02:05		02:20	02:35		02:50	03:05		03:20	03:35		03:50	04:05		04:20	04:35	04:50	05:05	05:20	05:35	05:50	06:05	06:20	06:35	06:48	06:58	07:08	07:18	07:28
BSGR	01:21	01:36		01:51	02:06		02:21	02:36		02:51	03:06		03:21	03:36		03:51	04:06		04:21	04:36	04:51	05:06	05:21	05:36	05:51	06:06	06:21	06:36	06:48	06:58	07:08	07:18	07:28
BSKR o	01:22	01:37		01:52	02:07		02:22	02:37		02:52	03:07		03:22	03:37		03:52	04:07		04:22	04:37	04:52	05:07	05:22	05:37	05:52	06:07	06:22	06:37	06:50	07:00	07:10	07:20	07:30
nach	⟲	HAL		⟲	HAL		⟲	HAL		⟲	HAL		⟲	⟲		⟲	⟲		⟲	⟲	⟲	⟲	⟲	⟲	⟲	⟲	⟲	⟲	⟲	⟲	⟲	⟲	⟲

BADL	3/4	3	45	Schönefeld ✈
			46	Königs Wusterhausen
			8	Zeuthen
			85	Grünau
			9	Schönefeld ✈
		4	45	Südkreuz
			46	Westend
			8	Birkenwerder
			85	Pankow
			9	Spandau
BAF	41	41	7	**Ankunft**
			7	**Potsdam Hbf**
	42/44	42	7	**Ankunft**
			7	**Potsdam Hbf**
		44		**Regionalverkehr**
BAGL	1/2	1	45	Schönefeld ✈
			9	Schönefeld ✈
		2	45	Südkreuz
			9	Spandau
BAHU	A	1		**kein Zugverkehr**
		2	1	Wannsee
			2	Blankenfelde
			25	Teltow Stadt
			26	Teltow Stadt
	B	3	1	Oranienburg
		4	2	Bernau
			25	Hennigsdorf
			26	Waidmannslust
BALX	B	3	3	Erkner
			5	Strausberg Nord
			7	Ahrensfelde
			9	Schönefeld ✈
		4	3	Spandau
			5	Westkreuz
			7	Potsdam Hbf
			9	Spandau
BARF	1	1	25	Teltow Stadt
			25	Hennigsdorf
BATS	1/2	1	2	Blankenfelde
		2	2	Bernau
BBAB	1/2	1	7	Potsdam Hbf
		2	7	Ahrensfelde
BBCH	1/2	1	2	Blankenfelde
		2	2	Bernau
BBDF	1	1	5	Westkreuz
	2	2	5	Strausberg Nord
BBER	1/2	2	2	**Ankunft**
			2	**Blankenfelde**
BBEU	1/2	1	41	Ring ↻
			46	Gesundbrunnen
		2	42	Ring ↻
			46	Königs Wusterhausen
BBEV	3/4	3	3	Erkner
			5	Strausberg Nord
			7	Ahrensfelde
			9	Schönefeld ✈
		4	3	Spandau
			5	Westkreuz
			7	Potsdam Hbf
			9	Spandau
BBFD	3	3	2	**Ankunft**
			2	**Bernau**
BBFE	1/2	1	8	Zeuthen
		2	8	Birkenwerder
BBGT	1/2	1	1	Wannsee
		2	1	Oranienburg
BBIS	1/2	1	5	Westkreuz
		2	5	Strausberg Nord
BBIW	4/6	4	1	Oranienburg
			8	**Ankunft**
		6	1	Wannsee
			8	**Zeuthen**
BBLB	1/4	1	2	Blankenfelde
			8	Zeuthen
			8	**Zeuthen**
		4	2	Bernau
			8	Birkenwerder
			8	**Ankunft**
BBMW	A	3	8	Zeuthen
			85	Grünau
			9	Schönefeld ✈
		5	45	Schönefeld ✈
			46	Königs Wusterhausen
			47	Spindlersfeld
	B	4	45	Südkreuz
			46	Westend
			47	Hermannstraße
			8	Birkenwerder
			85	Pankow
			9	Spandau
BBOR	1/2	1	1	Oranienburg
		2	1	Wannsee

BBOS	A	1	1	Wannsee
			25	Teltow Stadt
			26	Teltow Stadt
		2	2	Blankenfelde
			8	Zeuthen
			85	Grünau
	B	3	2	Bernau
			8	Birkenwerder
			85	Pankow
		4	1	Oranienburg
			25	Hennigsdorf
			26	Waidmannslust
BBRF	1	1	2	Bernau
			2	Blankenfelde
BBU	1/2	1	2	Blankenfelde
			2	**Lichtenrade**
		2	2	**Ankunft**
			2	Bernau
BBUP	1/2	1	41	Ring ↻
			46	Westend
		2	42	Ring ↻
			46	Königs Wusterhausen
BCHS	C	5	3	Erkner
		6	5	Strausberg Nord
			7	Ahrensfelde
			9	Schönefeld ✈
	D	7	7	Potsdam Hbf
		8	3	Spandau
			5	Westkreuz
			9	Spandau
BE	31/32	31	3	**Ankunft**
			3	**Westkreuz**
		32	3	**Ankunft**
			3	**Westkreuz**
BEBD	2	2	25	Teltow Stadt
			25	Hennigsdorf
BEIW	3/4	3	46	Königs Wusterhausen
			8	Zeuthen
		4	46	Westend
			8	Birkenwerder
BFA	1/2	1	41	Ring ↻
			8	Zeuthen
			85	Grünau
		2	42	Ring ↻
			8	Birkenwerder
			85	Pankow
BFB	1/2	1	1	Wannsee
		2	1	Oranienburg
BFD	15/16	15	5	Strausberg Nord
		16	5	Westkreuz
BFFO	1/2	1	5	Strausberg Nord
			7	Ahrensfelde
			75	Wartenberg
		2	5	Westkreuz
			7	Potsdam Hbf
			75	Ostbahnhof
BFLH ✈	A	11	45	**Ankunft**
			45	**Südkreuz**
		13	9	**Ankunft**
			9	**Spandau**
BFOH	1/2	1	1	**Ankunft**
			1	Oranienburg
		2	1	Wannsee
			1	**Wannsee**
BFRH	1/2	1	3	Spandau
			3	**Spandau**
		2	3	**Ankunft**
			3	Erkner
BFRU	1/2	1	1	Wannsee
		2	1	Oranienburg
BFST	C	5	3	Erkner
			5	Strausberg Nord
			7	Ahrensfelde
			9	Schönefeld ✈
		6	3	Spandau
			5	Westkreuz
			7	Potsdam Hbf
			9	Spandau
BFSTT	D	11	1	Wannsee
			2	Blankenfelde
			25	Teltow Stadt
			26	Teltow Stadt
		12	1	Oranienburg
			2	Bernau
			25	Hennigsdorf
			26	Waidmannslust

BGAS	A	1	46	Königs Wusterhausen
			8	Zeuthen
		2	8	**Ankunft**
			85	**Ankunft**
	B	3	8	**Birkenwerder**
			85	**Pankow**
		4	46	Westend
			8	Birkenwerder
BGB	A	1	1	Wannsee
			2	Blankenfelde
			25	Teltow Stadt
			26	Teltow Stadt
		2	42	Ring ↻
			46	**Königs Wusterhausen**
	B	3	41	Ring ↻
			46	**Ankunft**
		4	1	Oranienburg
			2	Bernau
			25	Hennigsdorf
			26	Waidmannslust
BGBA	1/2	1	45	Schönefeld ✈
			9	Schönefeld ✈
		2	45	Südkreuz
			9	Spandau
BGGS	1/2	1	1	Wannsee
		2	1	Oranienburg
BGRI	1/2	1	7	Potsdam Hbf
		2	7	Ahrensfelde
BGSE	51/52	51	75	Wartenberg
		52	75	Ostbahnhof
BGSS	1/2	1	41	Ring ↻
			8	Zeuthen
			85	Grünau
		2	42	Ring ↻
			8	Birkenwerder
			85	Pankow
BGWD	A	1	7	Potsdam Hbf
		2	3	**Ankunft**
			5	**Ankunft**
			7	**Ankunft**
	B	3	3	**Erkner**
			5	**Mahlsdorf**
			7	**Ahrensfelde**
		4	7	Ahrensfelde
BHAL	1/2	1	41	Ring ↻
			46	Westend
		2	42	Ring ↻
			46	Königs Wusterhausen
BHBF	15/16	15	3	Erkner
			5	Strausberg Nord
			7	Ahrensfelde
			9	Schönefeld ✈
		16	3	Spandau
			5	Westkreuz
			7	Potsdam Hbf
			9	Spandau
BHD	A	1	25	**Ankunft**
			25	**Teltow Stadt**
				Regionalverkehr
		5	25	**Ankunft**
			25	**Teltow Stadt**
				Regionalverkehr
BHED	1/2	1	1	Oranienburg
		2	1	Wannsee
BHEI	1/2	1	41	Ring ↻
			46	Westend
		2	42	Ring ↻
			46	Königs Wusterhausen
BHER	1/2	1	41	Ring ↻
			45	Südkreuz
			46	Westend
			47	**Ankunft**
		2	42	Ring ↻
			45	Schönefeld ✈
			46	Königs Wusterhausen
			47	**Spindlersfeld**
BHGM	1	1	5	Strausberg Nord
			5	Westkreuz
BHH	1/2	1	75	Wartenberg
		2	75	Ostbahnhof
BHI	1/2	1	3	Westkreuz
		2	3	Erkner
BHKM	3/4	3	3	Erkner
			5	Strausberg Nord
			7	Ahrensfelde
			9	Schönefeld ✈
		4	3	Spandau
			5	Westkreuz
			7	Potsdam Hbf
			9	Spandau

BHLS	1/2	1	25	Hennigsdorf
		2	25	Teltow Stadt
BHN	3/4	3	1	Oranienburg
			8	Birkenwerder
		4	1	Wannsee
			8	Zeuthen
BHO	1/2	1	41	Ring ↻
			46	Westend
		2	42	Ring ↻
			46	Königs Wusterhausen
BHPG	4/5	4	5	**Ankunft**
			5	**Westkreuz**
			5	Strausberg Nord
			5	Westkreuz
		5		**kein Zugverkehr**
BHST	1/2	1	3	Erkner
			9	Schönefeld ✈
		2	3	Spandau
			9	Spandau
BHUM	1/2	1	1	Wannsee
			2	Blankenfelde
			25	Teltow Stadt
			26	Teltow Stadt
		2	1	Oranienburg
			2	Bernau
			25	Hennigsdorf
			26	Waidmannslust
BIP	1/2	1	41	Ring ↻
			46	Westend
		2	42	Ring ↻
			46	Königs Wusterhausen
BJB	3/4	3	3	Erkner
			5	Strausberg Nord
			7	Ahrensfelde
			9	Schönefeld ✈
		4	3	Spandau
			5	Westkreuz
			7	Potsdam Hbf
			9	Spandau
BJLB	1	1	1	Wannsee
	2	2	1	Oranienburg
BJUN	B	5	41	Ring ↻
			46	Gesundbrunnen
		6	42	Ring ↻
			46	Königs Wusterhausen
BKAD	1/2	1	5	Westkreuz
		2	5	Strausberg Nord
BKBO	2	2	25	Teltow Stadt
			25	Hennigsdorf
BKHD	1/2	1	45	Südkreuz
			46	Westend
			47	Hermannstraße
		2	45	Schönefeld ✈
			46	Königs Wusterhausen
			47	Spindlersfeld
BKLH	11/12	11	3	Spandau
		12	3	Erkner
BKPK	1/2	1	3	Spandau
		2	3	Erkner
BKRW	3/4	3	2	Bernau
				Regionalverkehr
		4	2	Blankenfelde
BKW	B	2	46	**Ankunft**
			46	**Westend**
		3		**Regionalverkehr**
BLAK	2	2	25	Teltow Stadt
			26	Teltow Stadt
			25	Hennigsdorf
			26	Waidmannslust
BLEN	1/2	1	1	Oranienburg
		2	1	Wannsee
BLI	1/2	1	5	Strausberg Nord
			5	**Mahlsdorf**
			7	Ahrensfelde
			75	Wartenberg
			75	**Wartenberg**
		2	5	Westkreuz
			5	**Ankunft**
			7	Potsdam Hbf
			75	Ostbahnhof
			75	**Ankunft**
BLIO	1/2	1	25	Teltow Stadt
			26	Teltow Stadt
		2	25	Hennigsdorf
			26	Waidmannslust
BLIS	1/2	1	25	Teltow Stadt
			26	Teltow Stadt
		2	25	Hennigsdorf
			26	Waidmannslust

BLRD	1/2	1	2	Blankenfelde
			2	Bernau
		2	2	**Ankunft**
			2	**Buch**
BLST	1/2	1	41	Ring ↻
			8	Zeuthen
			85	Grünau
		2	42	Ring ↻
			8	Birkenwerder
			85	Pankow
BLWE	1/2	1	1	Wannsee
		2	1	Oranienburg
BMAH	2/3	2	2	Bernau
		3	2	Blankenfelde
BMAZ	1/2	1	7	Ahrensfelde
		2	7	Potsdam Hbf
BMDF	1/2	1	5	**Ankunft**
			5	**Westkreuz**
			5	**Lichtenberg**
		2	5	Westkreuz
	3/4	3	5	Strausberg Nord
		4	5	**Ankunft**
			5	**Strausberg Nord**
BMEA	1/2	1	7	Ahrensfelde
		2	7	Potsdam Hbf
BMEX	1/2	1	1	Wannsee
		2	1	Oranienburg
BMF	1/2	1	2	Blankenfelde
		2	2	Bernau
BMM	6	6	8	Birkenwerder
			8	Zeuthen
BMN	1/2	1	41	Ring ↻
			46	Westend
		2	42	Ring ↻
			46	Königs Wusterhausen
BMS	1/2	1	3	Erkner
			9	Schönefeld ✈
		2	3	Spandau
			9	Spandau
BNB	A	1	1	Wannsee
			2	Blankenfelde
			25	Teltow Stadt
			26	Teltow Stadt
		2	25	**Teltow Stadt**
	B	3	25	**Ankunft**
		4	1	Oranienburg
			2	Bernau
			25	Hennigsdorf
			26	Waidmannslust
BNIS	3/4	3	7	Potsdam Hbf
		4	7	Ahrensfelde
BNIW	1/2	1	1	Wannsee
		2	1	Oranienburg
BNG	1	1	5	Strausberg Nord
			5	Westkreuz
BNK	1/2	1	41	Ring ↻
			45	Südkreuz
			46	Westend
			47	Hermannstraße
		2	42	Ring ↻
			45	Schönefeld ✈
			46	Königs Wusterhausen
			47	Spindlersfeld
BNPL	1/2	1	5	Strausberg Nord
			7	Ahrensfelde
			75	Wartenberg
		2	5	Westkreuz
			7	Potsdam Hbf
			75	Ostbahnhof
BOK	F	11	41	Ring ↻
			8	Zeuthen
			85	Grünau
		12	42	Ring ↻
			8	Birkenwerder
			85	Pankow
BOKS	D	5	3	Ostbahnhof
			5	Westkreuz
			75	Ostbahnhof
		6	3	Spandau
			5	Westkreuz
			7	Potsdam Hbf
			75	Ostbahnhof
	E	3	3	Erkner
			5	Strausberg Nord
			7	Ahrensfelde
		4	75	Wartenberg

BOLS	A	1	3	Erkner
			9	Schönefeld ✈
		2	3	Spandau
			9	Spandau
	B-E			**bei Veranstaltungen**
BORB	A	30	1	**Ankunft**
			1	**Wannsee**
		32		**kein Zugverkehr**
BORS	1/2	1	1	Wannsee
			2	Blankenfelde
			25	Teltow Stadt
			26	Teltow Stadt
		2	1	Oranienburg
			2	Bernau
			25	Hennigsdorf
			26	Waidmannslust
BOSB	D	8	3	Erkner
			5	Strausberg Nord
			7	Ahrensfelde
			9	Schönefeld ✈
		9	3	**Erkner**
			75	**Ankunft**
			75	**Wartenberg**
	E	10	3	**Ankunft**
		11	3	Spandau
			5	Westkreuz
			7	Potsdam Hbf
			9	Spandau
BOSP	1	1	47	Spindlersfeld
			47	Hermannstraße
BOSS	1/2	1	25	Teltow Stadt
			26	Teltow Stadt
		2	25	Hennigsdorf
			26	Waidmannslust
BPDH	C	6	7	**Ankunft**
			7	**Ahrensfelde**
		7	7	**Ankunft**
			7	**Ahrensfelde**
BPEN	1	1	5	Strausberg Nord
			5	Westkreuz
BPHD	1/2	1	2	Blankenfelde
			8	Zeuthen
		2	2	Bernau
			8	Birkenwerder
BPIC	1/2	1	3	Erkner
			9	Schönefeld ✈
		2	3	Spandau
			9	Spandau
BPKW	1/2	1	2	Bernau
			8	Birkenwerder
			85	**Ankunft**
		2	2	Blankenfelde
			8	Zeuthen
			85	**Grünau**
BPLA	1/2	1	41	Ring ↻
			8	Zeuthen
			85	Grünau
		2	42	Ring ↻
			8	Birkenwerder
			85	Pankow
BPOE	1/2	1	7	Ahrensfelde
		2	7	Potsdam Hbf
BPOP	A	11	1	Wannsee
			2	Blankenfelde
			25	Teltow Stadt
			26	Teltow Stadt
		12	1	**Zehlendorf**
			26	**Teltow Stadt**
	B	14	1	Oranienburg
			1	**Ankunft**
			2	Bernau
			25	Hennigsdorf
			26	Waidmannslust
			26	**Ankunft**
BPRS	A	1	2	Blankenfelde
		3	25	Teltow Stadt
			26	Teltow Stadt
	B	2	2	Bernau
		4	25	Hennigsdorf
			26	Waidmannslust
BPWA	3/4	3	8	Zeuthen
			85	Grünau
			9	Schönefeld ✈
		4	8	Birkenwerder
			85	Pankow
			9	Spandau

BRB	1/2	1	3	Spandau
		2	3	Erkner
BRD	1/2	1	3	Spandau
		2	3	Erkner
BRGT	1	1	2	Blankenfelde
			2	Bernau
BRH	1/2	1	3	Spandau
		2	3	Erkner
BRST	1/2	1	1	Wannsee
		2	1	Oranienburg
BRW	1/2	1	7	Ahrensfelde
		2	7	Potsdam Hbf
BSAL	1/2	1	41	Ring ⟲
			8	Zeuthen
			85	Grünau
		2	42	Ring ⟲
			8	Birkenwerder
			85	Pankow
BSAP	3/4	3	3	Erkner
			5	Strausberg Nord
			7	Ahrensfelde
			9	Schönefeld ✈
		4	3	Spandau
			5	Westkreuz
			7	Potsdam Hbf
			9	Spandau
BSC	1/2	1	2	Blankenfelde
		2	2	Bernau
BSCF	3/4	3	45	Schönefeld ✈
			46	Königs Wusterhausen
			8	Zeuthen
			85	Grünau
			9	Schönefeld ✈
		4	45	Südkreuz
			46	Westend
			8	Birkenwerder
			85	Pankow
			9	Spandau
BSLS	1/2	1	1	Wannsee
		2	1	Oranienburg
BSDE	1/2	1	25	Teltow Stadt
			26	Teltow Stadt
		2	25	Hennigsdorf
			26	Waidmannslust
BSDG	1/2	1	1	Wannsee
		2	1	Oranienburg
BSGR	11/12	11	41	Ring ⟲
			46	Westend
		12	42	Ring ⟲
			46	Königs Wusterhausen
BSGV	1/2	1	1	Wannsee
		2	1	Oranienburg
BSKR	11/12	11	41	Ring ⟲
			45	**Ankunft**
			46	Westend
		12	42	Ring ⟲
			45	**Schönefeld ✈**
			46	Königs Wusterhausen
BSKV	1/2	1	2	Blankenfelde
			25	Teltow Stadt
			26	Teltow Stadt
		2	2	Bernau
			25	Hennigsdorf
			26	Waidmannslust
BSNF	6/8	6	8	Birkenwerder
		8	8	Zeuthen
BSNH	3/4	3	1	Oranienburg
			25	Hennigsdorf
			26	Waidmannslust
		4	1	Wannsee
			25	Teltow Stadt
			26	Teltow Stadt
BSO	1/2	1	41	Ring ⟲
		2	42	Ring ⟲
BSPA	A	1	3	**Ankunft**
			3	**Erkner**
		2	9	**Ankunft**
			9	**Schönefeld ✈**
BSPF	1	1	47	**Ankunft**
			47	**Hermannstraße**
BSPH	20/21	20	7	Potsdam Hbf
			75	Ostbahnhof
		21	7	Ahrensfelde
			75	Wartenberg
BSRW	1/2	1	3	Spandau
			9	Spandau
		2	3	Erkner
			9	Schönefeld ✈

BSTN	1	1	5	**Ankunft**
			5	**Westkreuz**
BSTO	1/2	1	41	Ring ⟲
			8	Zeuthen
			85	Grünau
		2	42	Ring ⟲
			8	Birkenwerder
			85	Pankow
BSTR	1	1	5	Strausberg Nord
			5	Westkreuz
BSTV	8/9	8	5	Strausberg Nord
			5	Westkreuz
		9	5	**Ankunft**
			5	**Westkreuz**
BSW	3/4	3	45	Schönefeld ✈
			46	Königs Wusterhausen
			47	Spindlersfeld
			47	**Ankunft**
			47	**Spindlersfeld**
			8	Zeuthen
			85	Grünau
			9	Schönefeld ✈
		4		**kein Zugverkehr**
	5/6	5	85	**kein Zugverkehr**
		6	45	Südkreuz
			46	Westend
			47	Hermannstraße
			8	Birkenwerder
			85	Pankow
			9	Spandau
BSZF	1	1	25	Teltow Stadt
			25	Hennigsdorf
BTG	1/6	1	25	Hennigsdorf
		6	25	Teltow Stadt
BTGN	3/4	3	3	Erkner
			5	Strausberg Nord
			7	Ahrensfelde
			9	Schönefeld ✈
		4	3	Spandau
			5	Westkreuz
			7	Potsdam Hbf
			9	Spandau
BTHF	1/2	1	41	Ring ⟲
			45	Südkreuz
			46	Westend
		2	42	Ring ⟲
			45	Schönefeld ✈
			46	Königs Wusterhausen
BTLS	1/2	1	26	**Ankunft**
			26	**Waidmannslust**
		2	25	**Ankunft**
			25	**Hennigsdorf**
BTOR	1/2	1	1	Wannsee
			2	Blankenfelde
			25	Teltow Stadt
			26	Teltow Stadt
		2	1	Oranienburg
			2	Bernau
			25	Hennigsdorf
			26	Waidmannslust
BTP	A	1	41	Ring ⟲
			85	Grünau
		3	8	Zeuthen
			9	Schönefeld ✈
	B	2	42	Ring ⟲
			8	Birkenwerder
		4	85	Pankow
			9	Spandau
BWAB	11/12	11	75	**Ankunft**
			75	**Ostbahnhof**
		12	75	**Ankunft**
			75	**Ostbahnhof**
BWAI	1/2	1	1	Oranienburg
			26	**Ankunft**
		2	1	Wannsee
			26	**Teltow Stadt**
BWED	1/2	1	41	Ring ⟲
			46	Gesundbrunnen
		2	42	Ring ⟲
			46	Königs Wusterhausen

BWES	1/2	1	41	Ring ⟲
			46	Gesundbrunnen
			46	**Ankunft**
		2	42	Ring ⟲
			46	Königs Wusterhausen
			46	**Königs Wusterhausen**
BWH		1	41	Ring ⟲
			46	Gesundbrunnen
		2	42	Ring ⟲
			46	Königs Wusterhausen
BWHH	1/2	1	3	Spandau
		2	3	Erkner
BWI	3/4	3	46	Königs Wusterhausen
		4	46	Westend
BWIG	1/2	1	3	Spandau
		2	3	Erkner
BWIN		1	1	Oranienburg
			26	Waidmannslust
		2	1	Wannsee
			26	Teltow Stadt
BWKRR	11/12	11	41	Ring ⟲
			46	Westend
		12	42	Ring ⟲
			46	Königs Wusterhausen
BWKS	A	1	3	Spandau
			7	Potsdam Hbf
			9	Spandau
		2	5	**Ankunft**
	B	3	5	**Strausberg Nord**
		4	3	Erkner
			7	Ahrensfelde
			9	Schönefeld ✈
BWM	1/2	1	1	Oranienburg
			26	Waidmannslust
		2	1	Wannsee
			26	Teltow Stadt
BWOK	3/4	3	1	Oranienburg
			25	Hennigsdorf
			26	Waidmannslust
		4	1	Wannsee
			25	Teltow Stadt
			26	Teltow Stadt
BWRS	A	1	3	Erkner
			5	Strausberg Nord
			7	Ahrensfelde
			9	Schönefeld ✈
		2	3	Erkner
			75	Wartenberg
			75	**Wartenberg**
	B	3	3	Ostbahnhof
			75	Ostbahnhof
			75	**Ankunft**
		4	3	Spandau
			5	Westkreuz
			7	Potsdam Hbf
			75	Ostbahnhof
			9	Spandau
BWSS	A	1	7	Potsdam Hbf
		2	1	**Ankunft**
	B	3	1	**Oranienburg**
		4	7	Ahrensfelde
BWT	11/1	11	5	Westkreuz
		1	U5	Alexanderplatz
	12/2	2	U5	Hönow
		12	5	Strausberg Nord
BYOR	1/2	1	2	Blankenfelde
			25	Teltow Stadt
			26	Teltow Stadt
		2	2	Bernau
			25	Hennigsdorf
			26	Waidmannslust
BZD	1/2	1	1	Wannsee
			1	**Ankunft**
		2	1	Oranienburg
			1	**Potsdamer Platz**
BZEP	4/6	4	2	Bernau
		6	2	Blankenfelde
BZOS	5/6	5	3	Erkner
			5	Strausberg Nord
			7	Ahrensfelde
			9	Schönefeld ✈
		6	3	Spandau
			5	Westkreuz
			7	Potsdam Hbf
			9	Spandau
BZTH	3/4	3	46	Königs Wusterhausen
			8	**Ankunft**
			8	**Birkenwerder**
		4	46	Westend

Nachtverkehr

BADL	3/4	3	46	Königs Wusterhausen
			8	Grünau
			9	Schönefeld ✈
		4	46	Südkreuz
			8	Pankow
			9	Spandau
BAF	41/42	41	7	**Ankunft**
			7	**Potsdam Hbf**
		42		**kein Zugverkehr**
BAGL	1/2	1	9	Schönefeld ✈
		2	9	Spandau
BAHU	1/2	1		**kein Zugverkehr**
		2	1	Wannsee
			2	Blankenfelde
			25	Teltow Stadt
	3/4	3	1	Oranienburg
		4	2	Bernau
			25	Hennigsdorf
BALX	3/4	3	7	Ahrensfelde
			9	Schönefeld ✈
		4	7	Potsdam Hbf
			9	Spandau
BARF	1	1	25	Teltow Stadt
			25	Hennigsdorf
BATS	1/2	1	2	Blankenfelde
		2	2	Bernau
BBAB	1/2	1	7	Potsdam Hbf
		2	7	Ahrensfelde
BBCH	1/2	1	2	Blankenfelde
		2	2	Bernau
BBDF	1	1	5	Ostbahnhof
	2	2	5	Mahlsdorf
BBER	1/2	2	2	**Ankunft**
			2	**Blankenfelde**
BBEU	1/2	1	41	Ring ⟲
		2	42	Ring ⟲
			42	Halensee
BBEV	3/4	3	7	Ahrensfelde
			9	Schönefeld ✈
		4	7	Potsdam Hbf
			9	Spandau
BBFD	3	3	2	**Ankunft**
			2	**Bernau**
BBFE	1/2			**kein Zugverkehr**
BBGT	1/2	1	1	Wannsee
		2	1	Oranienburg
BBIS	1/2	1	5	Mahlsdorf
		2	5	Strausberg Nord
BBIW	4/6	4	1	Oranienburg
		6	1	Wannsee
BBLB	1/4	1	2	Blankenfelde
		4	2	Bernau
BBMW	3/5	3	8	Grünau
			9	Schönefeld ✈
		5	46	Königs Wusterhausen
	4	4	46	Südkreuz
			8	Pankow
			9	Spandau
BBOR	1/2	1	1	Oranienburg
		2	1	Wannsee
BBOS	A	1	1	Wannsee
			25	Teltow Stadt
		2	2	Blankenfelde
			8	Grünau
	B	3	2	Bernau
			8	Pankow
		4	1	Oranienburg
			25	Hennigsdorf
BBRF	1	1	2	Bernau
			2	Blankenfelde
BBU	1/2	1	2	Blankenfelde
		2	2	Bernau
BBUP	1/2	1	41	Ring ⟲
			41	Westend
		2	42	Ring ⟲

BCHS	5/6	5		**kein Zugverkehr**
		6	7	Ahrensfelde
			9	Schönefeld ✈
	7/8	7		**kein Zugverkehr**
		8	7	Potsdam Hbf
			9	Spandau
BE	31/32	31	3	**Ankunft**
			3	**Ostkreuz**
		32		**kein Zugverkehr**
	34	34		**kein Zugverkehr**
BEBD	2	2	25	Teltow Stadt
			25	Hennigsdorf
BEIW	3/4	3	46	Königs Wusterhausen
		4	46	Südkreuz
BFA	1/2	1	41	Ring ⟲
			8	Grünau
		2	42	Ring ⟲
			8	Pankow
BFB	1/2	1	1	Wannsee
		2	1	Oranienburg
BFD	15/16	15	5	Strausberg Nord
		16	5	Mahlsdorf
BFFO	1/2	1	5	Mahlsdorf
			7	Ahrensfelde
			75	Wartenberg
		2	5	Ostbahnhof
			7	Potsdam Hbf
			75	Lichtenberg
BFLH ✈	11/13	11		**kein Zugverkehr**
		13	9	**Ankunft**
			9	**Spandau**
BFOH	1/2	1	1	Oranienburg
		2	1	Wannsee
BFRH	1/2	1	3	Ostkreuz
		2	3	Erkner
BFRU	1/2	1	1	Wannsee
		2	1	Oranienburg
BFST	5/6	5	7	Ahrensfelde
			9	Schönefeld ✈
		6	7	Potsdam Hbf
			9	Spandau
BFSTT	11/12	11	1	Wannsee
			2	Blankenfelde
			25	Teltow Stadt
		12	1	Oranienburg
			2	Bernau
			25	Hennigsdorf
BGAS	1/2	1	46	Königs Wusterhausen
		2	8	**Ankunft**
	3/4	3	8	**Pankow**
		4	46	Südkreuz
BGB	1/2	1	1	Wannsee
			2	Blankenfelde
			25	Teltow Stadt
		2	42	Ring ⟲
			42	Halensee
	3/4	3	41	Ring ⟲
		4	1	Oranienburg
			2	Bernau
			25	Hennigsdorf
BGBA	1/2	1	9	Schönefeld ✈
		2	9	Spandau
BGGS	1/2	1	1	Wannsee
		2	1	Oranienburg
BGRI	1/2	1	7	Potsdam Hbf
		2	7	Ahrensfelde
BGSE	51/52	51	75	Wartenberg
		52	75	Lichtenberg
BGSS	1/2	1	41	Ring ⟲
			8	Grünau
		2	42	Ring ⟲
			8	Pankow
BGWD	1/2	1	7	Potsdam Hbf
		2		**kein Zugverkehr**
	3/4	3		**kein Zugverkehr**
		4	7	Ahrensfelde
BHAL	1/2	1	41	Ring ⟲
			41	**Ring ⟲**
			41	Westend
		2	42	Ring ⟲
			42	**Ankunft**

BHBF	15/16	15	7	Ahrensfelde
			9	Schönefeld ✈
		16	7	Potsdam Hbf
			9	Spandau
BHD	1/5	1	25	**Ankunft**
			25	**Teltow Stadt**
		5	25	**Ankunft**
			25	**Teltow Stadt**
BHED	1/2	1	1	Oranienburg
		2	1	Wannsee
BHEI	1/2	1	41	Ring ⟲
			41	Westend
		2	42	Ring ⟲
BHER	1/2	1	41	Ring ⟲
			41	Westend
			46	Südkreuz
		2	42	Ring ⟲
			46	Königs Wusterhausen
BHGM	1	1	5	Strausberg Nord
			5	Mahlsdorf
BHH	1/2	1	75	Wartenberg
		2	75	Lichtenberg
BHI	1/2	1	3	Ostkreuz
		2	3	Erkner
BHKM	3/4	3	7	Ahrensfelde
			9	Schönefelde ✈
		4	7	Potsdam Hbf
			9	Spandau
BHLS	1/2	1	25	Hennigsdorf
		2	25	Teltow Stadt
BHN	3/4	3	1	Oranienburg
		4	1	Wannsee
BHO	1/2	1	41	Ring ⟲
			41	Westend
		2	42	Ring ⟲
BHPG	4/5	4	5	Strausberg Nord
			5	Mahlsdorf
		5		**kein Zugverkehr**
BHST	1/2	1	9	Schönefeld ✈
		2	9	Spandau
BHUM	1/2	1	1	Wannsee
			2	Blankenfelde
			25	Teltow Stadt
		2	1	Oranienburg
			2	Bernau
			25	Hennigsdorf
BIP	1/2	1	41	Ring ⟲
			41	Westend
		2	42	Ring ⟲
BJB	3/4	3	7	Ahrensfelde
			9	Schönefeld ✈
		4	7	Potsdam Hbf
			9	Spandau
BJLB	1/2	1	1	Wannsee
		2	1	Oranienburg
BJUN	5/6	5	41	Ring ⟲
		6	42	Ring ⟲
			42	Halensee
BKAD	1/2	1	5	Mahlsdorf
		2	5	Strausberg Nord
BKBO	2	2	25	Teltow Stadt
			25	Hennigsdorf
BKHD	1/2	1	46	Südkreuz
		2	46	Königs Wusterhausen
BKLH	11/12	11	3	Ostkreuz
		12	3	Erkner
BKPK	1/2	1	3	Ostkreuz
		2	3	Erkner
BKRW	3/4	3	2	Bernau
		4	2	Blankenfelde
BKW	2	2	46	**Ankunft**
			46	**Südkreuz**
BLAK	2	2	25	Teltow Stadt
			25	Hennigsdorf
BLEN	1/2	1	1	Oranienburg
		2	1	Wannsee

BLI	1/2	1	5	Mahlsdorf
			7	Ahrensfelde
			75	**Wartenberg**
		2	5	Ostbahnhof
			7	Potsdam Hbf
			75	**Ankunft**
BLIO	1/2	1	25	Teltow Stadt
		2	25	Hennigsdorf
BLIS	1/2	1	25	Teltow Stadt
		2	25	Hennigsdorf
BLRD	1/2	1	2	Blankenfelde
			2	Bernau
		2		kein Zugverkehr
BLST	1/2	1	41	Ring ⟲
			8	Grünau
		2	42	Ring ⟲
			42	Halensee
			8	Pankow
BLWE	1/2	1	1	Wannsee
		2	1	Oranienburg
BMAH	2/3	2	2	Bernau
		3	2	Blankenfelde
BMAZ	1/2	1	7	Ahrensfelde
		2	7	Potsdam Hbf
BMDF	1/2			kein Zugverkehr
	3/4	3	5	**Ankunft**
			5	**Ostbahnhof**
		4	5	**Ankunft**
			5	**Strausberg Nord**
BMEA	1/2	1	7	Ahrensfelde
		2	7	Potsdam Hbf
BMEX	1/2	1	1	Wannsee
		2	1	Oranienburg
BMF	1/2	1	2	Blankenfelde
		2	2	Bernau
BMM	6	6		kein Zugverkehr
BMN	1/2	1	41	Ring ⟲
			41	Westend
		2	42	Ring ⟲
			42	Halensee
BMS	1/2	1	9	Schönefeld ✈
		2	9	Spandau
BNB	1/2	1	1	Wannsee
			2	Blankenfelde
			25	Teltow Stadt
		2		kein Zugverkehr
	3/4	3		kein Zugverkehr
		4	1	Oranienburg
			2	Bernau
			25	Hennigsdorf
BNIS	3/4	3	7	Potsdam Hbf
		4	7	Ahrensfelde
BNIW	1/2	1	1	Wannsee
		2	1	Oranienburg
BNG	1	1	5	Strausberg Nord
			5	Mahlsdorf
BNK	1/2	1	41	Ring ⟲
			41	Westend
			46	Südkreuz
		2	42	Ring ⟲
			46	Königs Wusterhausen
BNPL	1/2	1	5	Mahlsdorf
			7	Ahrensfelde
		2	5	Ostbahnhof
			7	Potsdam Hbf
BOK	F	11	41	Ring ⟲
			41	Westend
			8	Grünau
		12	42	Ring ⟲
			42	Halensee
			8	Pankow
BOKS	D	5	3	Ostbahnhof
			5	Ostbahnhof
		6	7	Potsdam Hbf
	E	3	3	Erkner
			7	Ahrensfelde
		4	5	Mahlsdorf
BOLS	A	1	9	Schönefeld ✈
		2	9	Spandau
BORB	A	30	1	**Ankunft**
			1	**Wannsee**
		32		kein Zugverkehr

BORS	1/2	1	1	Wannsee
			2	Blankenfelde
			25	Teltow Stadt
		2	1	Oranienburg
			2	Bernau
			25	Hennigsdorf
BOSB	D	8	7	Ahrensfelde
			9	Schönefeld ✈
		9	5	**Ankunft**
			5	**Mahlsdorf**
	E	10	3	**Ankunft**
			3	**Erkner**
		11	7	Potsdam Hbf
			9	Spandau
BOSP	1	1	47	Spindlersfeld
			47	Schöneweide
BOSS	1/2	1	25	Teltow Stadt
		2	25	Hennigsdorf
BPDH	C	6	7	**Ankunft**
			7	**Ahrensfelde**
		7		kein Zugverkehr
BPEN	1	1	5	Strausberg Nord
			5	Mahlsdorf
BPHD	1/2	1	2	Blankenfelde
		2	2	Bernau
BPIC	1/2	1	9	Schönefeld ✈
		2	9	Spandau
BPKW	1/2	1	2	Bernau
			8	**Ankunft**
		2	2	Blankenfelde
			8	**Grünau**
BPLA	1/2	1	41	Ring ⟲
			8	Grünau
		2	42	Ring ⟲
			42	Halensee
			8	Pankow
BPOE	1/2	1	7	Ahrensfelde
		2	7	Potsdam Hbf
BPOP	A	11	1	Wannsee
			2	Blankenfelde
			25	Teltow Stadt
		12		kein Zugverkehr
	B	13		kein Zugverkehr
		14	1	Oranienburg
			2	Bernau
			25	Hennigsdorf
BPRS	A	1	2	Blankenfelde
		3	25	Teltow Stadt
	B	2	2	Bernau
		4	25	Hennigsdorf
BPWA	3/4	3	8	Grünau
			9	Schönefeld ✈
		4	8	Pankow
			9	Spandau
BRB	1/2	1	3	Ostkreuz
		2	3	Erkner
BRD	1/2	1	3	Ostkreuz
		2	3	Erkner
BRGT	1	1	2	Blankenfelde
			2	Bernau
BRH	1/2	1	3	Ostkreuz
		2	3	Erkner
BRST	1/2	1	1	Wannsee
		2	1	Oranienburg
BRW	1/2	1	7	Ahrensfelde
		2	7	Potsdam Hbf
BSAL	1/2	1	41	Ring ⟲
			8	Grünau
		2	42	Ring ⟲
			42	Halensee
			8	Pankow
BSAP	3/4	3	7	Ahrensfelde
			9	Schönefeld ✈
		4	7	Potsdam Hbf
			9	Spandau
BSC	1/2	1	2	Blankenfelde
		2	2	Bernau
BSCF	3/4	3	46	Königs Wusterhausen
			8	Grünau
			9	Schönefeld ✈
		4	46	Südkreuz
			8	Pankow
			9	Spandau

BSLS	1/2	1	1	Wannsee
		2	1	Oranienburg
BSDE	1/2	1	25	Teltow Stadt
		2	25	Hennigsdorf
BSDG	1/2	1	1	Wannsee
		2	1	Oranienburg
BSGR	11/12	11	41	Ring ⟲
			41	Westend
		12	42	Ring ⟲
BSGV	1/2	1	1	Wannsee
		2	1	Oranienburg
BSKR	11/12	11	41	Ring ⟲
			41	Westend
			46	**Ankunft**
		12	42	Ring ⟲
			46	**Königs Wusterhausen**
BSKV	1/2	1	2	Blankenfelde
			25	Teltow Stadt
		2	2	Bernau
			25	Hennigsdorf
BSNF	6/8			kein Zugverkehr
BSNH	3/4	3	1	Oranienburg
			25	Hennigsdorf
		4	1	Wannsee
			25	Teltow Stadt
BSO	1/2	1	41	Ring ⟲
			41	Westend
		2	42	Ring ⟲
BSPA	1/2	1	9	**Ankunft**
			9	**Schönefeld ✈**
		2	9	**Ankunft**
			9	**Schönefeld ✈**
BSPF	1	1	47	**Ankunft**
			47	**Schöneweide**
BSPH	20/21	20	7	Potsdam Hbf
			75	Lichtenberg
		21	7	Ahrensfelde
			75	Wartenberg
BSRW	1/2	1	9	Spandau
		2	9	Schönefeld ✈
BSTN	1	1	5	**Ankunft**
			5	**Mahlsdorf**
BSTO	1/2	1	41	Ring ⟲
			8	Grünau
		2	42	Ring ⟲
			42	Halensee
			8	Pankow
BSTR	1	1	5	Strausberg Nord
			5	Mahlsdorf
BSTV	8/9	8	5	Strausberg Nord
			5	Mahlsdorf
		9		kein Zugverkehr
BSW	3/4	3	46	Königs Wusterhausen
			8	Grünau
			9	Schönefeld ✈
		4		kein Zugverkehr
	5/6	5		kein Zugverkehr
		6	46	Südkreuz
			47	**Ankunft**
			47	**Spindlersfeld**
			8	Pankow
			9	Spandau
BSZF	1	1	25	Teltow Stadt
			25	Hennigsdorf
BTG	1/6	1	25	Hennigsdorf
		6	25	Teltow Stadt
BTGN	3/4	3	7	Ahrensfelde
			9	Schönefeld ✈
		4	7	Potsdam Hbf
			9	Spandau
BTHF	1/2	1	41	Ring ⟲
			41	Westend
			46	Südkreuz
		2	42	Ring ⟲
			46	Königs Wusterhausen
BTLS	1/2	1		kein Zugverkehr
		2	25	**Ankunft**
			25	**Hennigsdorf**

BTOR	1/2	1	1	Wannsee
			2	Blankenfelde
			25	Teltow Stadt
		2	1	Oranienburg
			2	Bernau
			25	Hennigsdorf
BTP	A	1	41	Ring ⟲
			41	Westend
		3	8	Grünau
			9	Schönefeld ✈
	B	2	42	Ring ⟲
			8	Pankow
		4	9	Spandau
BWAB	11/12	11		kein Zugverkehr
		12	75	**Ankunft**
			75	**Lichtenberg**
BWAI	1/2	1	1	Oranienburg
		2	1	Wannsee
BWED	1/2	1	41	Ring ⟲
		2	42	Ring ⟲
			42	Halensee
BWES	1/2	1	41	Ring ⟲
			41	**Ankunft**
		2	42	Ring ⟲
			42	**Ring ⟲**
			42	Halensee
BWH		1	41	Ring ⟲
		2	42	Ring ⟲
			42	Westend
BWHH	1/2	1	3	Ostkreuz
		2	3	Erkner
BWI	3/4	3	46	Königs Wusterhausen
		4	46	Südkreuz
BWIG	1/2	1	3	Ostkreuz
		2	3	Erkner
BWIN		1	1	Oranienburg
		2	1	Wannsee
BWKRR	11/12	11	41	Ring ⟲
			41	Westend
		12	42	Ring ⟲
			42	Halensee
BWKS	A	1	7	Potsdam Hbf
			9	Spandau
		2		kein Zugverkehr
	B	3		kein Zugverkehr
		4	7	Ahrensfelde
			9	Schönefeld ✈
BWM	1/2	1	1	Oranienburg
		2	1	Wannsee
BWOK	3/4	3	1	Oranienburg
			25	Hennigsdorf
		4	1	Wannsee
			25	Teltow Stadt
BWRS	A	1	3	Erkner
			7	Ahrensfelde
			9	Schönefeld ✈
		2	5	Mahlsdorf
	B	3	3	Ostbahnhof
			5	Ostbahnhof
		4	7	Potsdam Hbf
			9	Spandau
BWSS	A	1	7	Potsdam Hbf
		2	1	**Ankunft**
	B	3	1	**Oranienburg**
		4	7	Ahrensfelde
BWT	11/1	11	5	Ostbahnhof
		1	U5	Alexanderplatz
	12/2	2	U5	Hönow
		12	5	Mahlsdorf
BYOR	1/2	1	2	Blankenfelde
			25	Teltow Stadt
		2	2	Bernau
			25	Hennigsdorf
BZD	1/2	1	1	Wannsee
		2	1	Oranienburg
BZEP	4/6	4	2	Bernau
		6	2	Blankenfelde
BZOS	5/6	5	7	Ahrensfelde
			9	Schönefeld ✈
		6	7	Potsdam Hbf
			9	Spandau
BZTH	3/4	3	46	Königs Wusterhausen
		4	46	Südkreuz

A	1/2	1	2	Ruhleben
		2	2	Pankow
Ad	1/2	1	7	Rudow
		2	7	Rathaus Spandau
Afr	1/2	1	6	Alt-Mariendorf
		2	6	Alt-Tegel
Al	1/3	1	5	**Ankunft**
			5	**Hönow**
		3		kein Zugverkehr
	2/4	2	5	**Ankunft**
			5	**Hönow**
		4		kein Zugverkehr
Am	1/2	1	9	Rathaus Steglitz
		2	9	Osloer Straße
Ap	1/2	1	8	Hermannstraße
		2	8	Wittenau
AS	1/2	1	7	Rudow
		2	7	Rathaus Spandau
At	1/2	1	6	Alt-Mariendorf
		2	6	Alt-Tegel
Au	1	1	3	Krumme Lanke
	2	2	3	Warschauer Straße
B	1/2	1	8	Hermannstraße
		2	8	Wittenau
Beo	1	1	9	Rathaus Steglitz
	2	2	9	Osloer Straße
Beu	1/2	1	7	Rudow
		2	7	Rathaus Spandau
Bi	1/2	1	9	Rathaus Steglitz
		2	9	Osloer Straße
Bk	1/2	1	6	Alt-Mariendorf
		2	6	Alt-Tegel
Bl	1/2	1	7	Rudow
		2	7	Rathaus Spandau
Bli	1/2	1	7	Rudow
		2	7	Rathaus Spandau
Bmo	1	1	2	Ruhleben
	2	2	2	Pankow
Bmu	1/2	1	7	Rudow
		2	7	Rathaus Spandau
Bo	1/2	1	8	Hermannstraße
		2	8	Wittenau
Bpo	1/2	1	4	Innsbrucker Platz
		2	4	Nollendorfplatz
Bpu	1/2	1	7	Rudow
		2	7	Rathaus Spandau
Br	1/2	1	7	Rudow
		2	7	Rathaus Spandau
BRT	1/2	1	55	**Ankunft**
			55	**Hauptbahnhof**
		2		kein Zugverkehr
Bs	1	1	2	Ruhleben
	2	2	2	Pankow
Bt	1/2	1	3	Krumme Lanke
		2	3	Warschauer Straße
Bu	1	1	9	Rathaus Steglitz
	2	2	9	Osloer Straße
Bü	1	1	5	Alexanderplatz
	2/3	2	5	Hönow
		3	5	**Alexanderplatz**
BUN	1/2	1	55	Brandenburger Tor
			55	Hauptbahnhof
		2		kein Zugverkehr
C	1/2	1	5	Alexanderplatz
		2	5	Hönow
Dd	1/2	1	3	Krumme Lanke
		2	3	Warschauer Straße
E	1/2	1	5	Alexanderplatz
		2	5	Hönow
EB	1/2	1	2	Ruhleben
		2	2	Pankow
Ei	1/2	1	7	Rudow
		2	7	Rathaus Spandau
F	1/2	1	6	Alt-Mariendorf
		2	6	Alt-Tegel
Ff	1/2	1	5	Alexanderplatz
		2	5	Hönow

Fi	1/2	1	5	Alexanderplatz
		2	5	Hönow
FN	1/2	1	8	Hermannstraße
		2	8	Wittenau
Fpo	1/2	1	3	Krumme Lanke
		2	3	Warschauer Straße
Fpu	1/2	1	7	Rudow
		2	7	Rathaus Spandau
Fr	1/2	1	6	Alt-Mariendorf
		2	6	Alt-Tegel
Ft	1/2	1	5	Alexanderplatz
		2	5	Hönow
Fw	1/2	1	9	Rathaus Steglitz
		2	9	Osloer Straße
Gb	1/2	1	8	Hermannstraße
		2	8	Wittenau
GK	1/2	1	5	Alexanderplatz
		2	5	Hönow
Go	1/2	1	1	Uhlandstraße
			3	Krumme Lanke
		2	1	Warschauer Straße
			3	Warschauer Straße
Gr	1	1	1	Uhlandstraße
			3	Krumme Lanke
	2	2	1	Warschauer Straße
			3	Warschauer Straße
Gs	1/2	1	7	Rudow
		2	7	Rathaus Spandau
Gt	1/2	1	9	Rathaus Steglitz
		2	9	Osloer Straße
Gu	1/2	1	2	Ruhleben
		2	2	Pankow
Gz	1/2	1	7	Rudow
		2	7	Rathaus Spandau
Ha	1/2	1	9	Rathaus Steglitz
		2	9	Osloer Straße
Hb	1/2	1	3	Krumme Lanke
		2	3	Warschauer Straße
HBF	1/2	1	55	**Ankunft**
			55	**Brandenburger Tor**
		2		kein Zugverkehr
Hd	1/2	1	5	Alexanderplatz
		2	5	Hönow
He	1/2	1	8	Hermannstraße
		2	8	Wittenau
Hh	1/2	1	6	Alt-Mariendorf
		2	6	Alt-Tegel
Hl	1/2	1	7	Rudow
		2	7	Rathaus Spandau
HMS	1/2	1	8	**Ankunft**
			8	**Wittenau**
		2	8	**Ankunft**
			8	**Wittenau**
Ho	1	1	1	Uhlandstraße
			3	Krumme Lanke
	2	2	1	Warschauer Straße
			3	Warschauer Straße
Hö	1/2	1	5	**Ankunft**
			5	**Alexanderplatz**
		2	5	**Ankunft**
			5	**Alexanderplatz**
	3	3	5	kein Zugverkehr
Hpo	1/2	1	8	Hermannstraße
		2	8	Wittenau
Hpu	1/2	1	7	Rudow
		2	7	Rathaus Spandau
Hs	1/2	1	7	Rudow
		2	7	Rathaus Spandau
Hu	1/2	1	6	Alt-Mariendorf
		2	6	Alt-Tegel
Hv	1/2	1	2	Ruhleben
		2	2	Pankow
Hz	1/2	1	3	Krumme Lanke
		2	3	Warschauer Straße
Ip	1/2	1	4	**Ankunft**
			4	**Nollendorfplatz**
		2	4	**Ankunft**
			4	**Nollendorfplatz**

Jho	1/3	1	7	Rudow
		3		kein Zugverkehr
Jhu	2/4	2	7	Rathaus Spandau
		4		kein Zugverkehr
JK	1/2	1	7	Rudow
		2	7	Rathaus Spandau
Jn	1/2	1	8	Hermannstraße
		2	8	Wittenau
Jt	1/2	1	7	Rudow
		2	7	Rathaus Spandau
K	1/2	1	3	**Ankunft**
			3	**Warschauer Straße**
		2	3	**Ankunft**
			3	**Warschauer Straße**
Ka	1/2	1	6	Alt-Mariendorf
		2	6	Alt-Tegel
KB	1/2	1	8	Hermannstraße
		2	8	Wittenau
Kbo	1/2	1	1	Uhlandstraße
			3	Krumme Lanke
		2	1	Warschauer Straße
			3	Warschauer Straße
Kbu	1/2	1	8	Hermannstraße
		2	8	Wittenau
Kd	1	1	2	Ruhleben
	2	2	2	Pankow
Kfo	1	1	1	Uhlandstraße
	2	2	1	Warschauer Straße
Kfu	1/2	1	9	Rathaus Steglitz
		2	9	Osloer Straße
KL	1/2	1	5	Alexanderplatz
		2	5	Hönow
KM	1/2	1	7	Rudow
		2	7	Rathaus Spandau
Kn	1/2	1	7	Rudow
		2	7	Rathaus Spandau
Ko	1/2	1	2	Ruhleben
		2	2	Pankow
Ks	1/2	1	6	Alt-Mariendorf
		2	6	Alt-Tegel
Kt	1/2	1	7	Rudow
		2	7	Rathaus Spandau
Kus	1/2	1	1	Uhlandstraße
			3	Krumme Lanke
		2	1	Warschauer Straße
			3	Warschauer Straße
L	1/2	1	8	Hermannstraße
		2	8	Wittenau
La	1/2	1	7	Rudow
		2	7	Rathaus Spandau
LD	1	1	8	Hermannstraße
	2	2	8	Wittenau
Li	1/2	1	5	Alexanderplatz
		2	5	Hönow
LL	1/2	1	5	Alexanderplatz
		2	5	Hönow
Lpo	1	1	6	Alt-Mariendorf
	2	2	6	Alt-Tegel
Lpu	1/2	1	9	Rathaus Steglitz
		2	9	Osloer Straße
Lu	1/2	1	2	Ruhleben
		2	2	Pankow
MB	1	1	2	Ruhleben
	2	2	2	Pankow
Md	1/2	1	5	Alexanderplatz
		2	5	Hönow
Me	1/3	1	6	Alt-Mariendorf
		3	7	Rudow
	2/4	2	6	Alt-Tegel
		4	7	Rathaus Spandau
Mf	1/2	1	6	**Ankunft**
			6	**Alt-Tegel**
		2	6	**Ankunft**
			6	**Alt-Tegel**
MH	1/2	1	2	Ruhleben
		2	2	Pankow
Mi	1/2	1	2	Ruhleben
		2	2	Pankow
Mic	1/2	1	6	Alt-Mariendorf
		2	6	Alt-Tegel

Mk	1/2	1	2	Ruhleben
		2	2	Pankow
Mo	1	1	1	Uhlandstraße
			3	Krumme Lanke
	2	2	1	Warschauer Straße
			3	Warschauer Straße
Mp	1/2	1	7	Rudow
		2	7	Rathaus Spandau
Mr	1/2	1	8	Hermannstraße
		2	8	Wittenau
Mu	1/2	1	7	Rudow
		2	7	Rathaus Spandau
NA	1/2	1	6	Alt-Mariendorf
		2	6	Alt-Tegel
Nd	1/2	1	2	Ruhleben
		2	2	Pankow
Nk	1/2	1	7	Rudow
		2	7	Rathaus Spandau
Nm	2/4	2	1	Warschauer Straße
			3	Warschauer Straße
			3	**Ankunft**
		4	4	**Ankunft**
			4	**Innsbrucker Platz**
No	1	1	2	Ruhleben
	2	2	2	Pankow
Np	1/2	1	9	Rathaus Steglitz
		2	9	Osloer Straße
Nu	1/3	1	1	Uhlandstraße
			3	Krumme Lanke
		3	3	**Krumme Lanke**
Ob	1/2	1	6	Alt-Mariendorf
		2	6	Alt-Tegel
Obi	1/3	1	2	Ruhleben
		3		kein Zugverkehr
	2/4	2	2	Pankow
		4		kein Zugverkehr
Olo	1/2	1	9	**Rathaus Steglitz**
		2	9	**Ankunft**
Olu	1/2	1	8	Hermannstraße
		2	8	Wittenau
Os	1/2	1	3	Krumme Lanke
		2	3	Warschauer Straße
Ot	1/2	1	3	Krumme Lanke
		2	3	Warschauer Straße
OTI	1/2	1	6	Alt-Mariendorf
		2	6	Alt-Tegel
P	1/2	1	7	Rudow
		2	7	Rathaus Spandau
PA	1/2	1	2	**Ruhleben**
		2	2	**Ankunft**
PB	1/2	1	8	Hermannstraße
		2	8	Wittenau
Pd	1/2	1	2	Ruhleben
		2	2	Pankow
Pi	1/2	1	7	Rudow
		2	7	Rathaus Spandau
Pk	1/2	1	8	Hermannstraße
		2	8	Wittenau
PL	1/2	1	6	Alt-Mariendorf
		2	6	Alt-Tegel
Po	1/2	1	3	Krumme Lanke
		2	3	Warschauer Straße
Pr	1	1	1	Uhlandstraße
			3	Krumme Lanke
	2	2	1	Warschauer Straße
			3	Warschauer Straße
Ps	1/2	1	6	Alt-Mariendorf
		2	6	Alt-Tegel
R	1/2	1	7	**Ankunft**
		2	7	**Rathaus Spandau**
Rb	1/2	1	6	Alt-Mariendorf
		2	6	Alt-Tegel
Rd	1/2	1	3	Krumme Lanke
		2	3	Warschauer Straße
RE	1/2	1	8	Hermannstraße
		2	8	Wittenau
Ri	1/2	1	6	Alt-Mariendorf
		2	6	Alt-Tegel
Rk	1/2	1	7	Rudow
		2	7	Rathaus Spandau

Rl	1/2	1	2	**Ankunft**
			2	**Pankow**
		2	2	**Ankunft**
			2	**Pankow**
Rm	1/2	1	7	Rudow
		2	7	Rathaus Spandau
Ro	1/2	1	8	Hermannstraße
		2	8	Wittenau
RP	1	1	2	Ruhleben
	2	2	2	Pankow
RR	1/2	1	8	Hermannstraße
		2	8	Wittenau
RS	1/2	1	4	Innsbrucker Platz
		2	4	Nollendorfplatz
RSp	1/3	1	7	**Rudow**
		3		kein Zugverkehr
	2/4	2	7	**Ankunft**
		4		kein Zugverkehr
Rw	1/2	1	7	Rudow
		2	7	Rathaus Spandau
Rzu	1/2	1	9	**Ankunft**
		2	9	**Osloer Straße**
S	1	1	1	Uhlandstraße
			3	Krumme Lanke
	2	2	1	Warschauer Straße
			3	Warschauer Straße
Sa	1/2	1	5	Alexanderplatz
		2	5	Hönow
Sch	1/2	1	6	Alt-Mariendorf
		2	6	Alt-Tegel
Scha	1/2	1	6	Alt-Mariendorf
		2	6	Alt-Tegel
Sd	1/3	1	2	Ruhleben
		3	2	**Ankunft**
			2	**Pankow**
	2	2	2	Pankow
Se	1/3	1	6	Alt-Mariendorf
		3	6	**Ankunft**
			6	**Alt-Mariendorf**
	2	2	6	Alt-Tegel
Sh	1/2	1	2	Ruhleben
		2	2	Pankow
Si	1/2	1	5	Alexanderplatz
		2	5	Hönow
Sie	1/2	1	7	Rudow
		2	7	Rathaus Spandau
SK	1/2	1	6	Alt-Mariendorf
		2	6	Alt-Tegel
Slo	2/4	2	9	Osloer Straße
		4		kein Zugverkehr
Slu	1/3	1	9	Rathaus Steglitz
		3		kein Zugverkehr
Sno	1	1	3	Krumme Lanke
	2	2	3	Warschauer Straße
Snu	1/2	1	9	Rathaus Steglitz
		2	9	Osloer Straße
So	1	1	2	Ruhleben
	2	2	2	Pankow
Sp	1/2	1	2	Ruhleben
		2	2	Pankow
Sr	1/2	1	5	Alexanderplatz
		2	5	Hönow
ST	1/2	1	8	Hermannstraße
		2	8	Wittenau
Sü	1/2	1	7	Rudow
		2	7	Rathaus Spandau
Sz	1/2	1	2	Ruhleben
		2	2	Pankow
T	1/2	1	3	Krumme Lanke
		2	3	Warschauer Straße
Tg	1/2	1	6	**Ankunft**
			6	**Alt-Mariendorf**
		2	6	**Ankunft**
			6	**Alt-Mariendorf**
Th	1	1	2	Ruhleben
			2	**Ankunft**
	2	2	2	**Pankow**
			2	Pankow
Tk	1/2	1	5	Alexanderplatz
		2	5	Hönow

Tm	1/2	1	9	Rathaus Steglitz
		2	9	Osloer Straße
Ts	1/2	1	6	Alt-Mariendorf
		2	6	Alt-Tegel
U	1/2	1	1	**Ankunft**
		2	1	**Warschauer Straße**
Ull	1/2	1	6	Alt-Mariendorf
		2	6	Alt-Tegel
V	1/2	1	4	Innsbrucker Platz
		2	4	Nollendorfplatz
VIN	1/2	1	2	Ruhleben
		2	2	Pankow
Vo	1/2	1	8	Hermannstraße
		2	8	Wittenau
W	1/2	1	8	Hermannstraße
		2	8	Wittenau
WA	1/2	1	1	**Ankunft**
			1	**Uhlandstraße**
			3	**Ankunft**
			3	**Krumme Lanke**
		2	1	**Ankunft**
			1	**Uhlandstraße**
			3	**Ankunft**
			3	**Krumme Lanke**
	3	3	1	bei Veranstaltungen
Wd	1/2	1	7	Rudow
		2	7	Rathaus Spandau
We	1/2	1	6	Alt-Mariendorf
		2	6	Alt-Tegel
WF	1/2	1	9	Rathaus Steglitz
		2	9	Osloer Straße
Wh	11/1	11	S5	Westkreuz
		1	5	Alexanderplatz
	12/2	2	5	Hönow
		12	S5	Strausberg Nord
WIU	1/2	1	8	**Hermannstraße**
		2	8	**Ankunft**
Wk	1/2	1	7	Rudow
		2	7	Rathaus Spandau
Wl	1/2	1	6	Alt-Mariendorf
		2	6	Alt-Tegel
WR	1/2	1	5	Alexanderplatz
		2	5	Hönow
Wsg	1/2	1	9	Rathaus Steglitz
		2	9	Osloer Straße
Wt	I	1	1	Uhlandstraße
			3	Krumme Lanke
		3	2	Ruhleben
	II	2	2	Pankow
		4	3	Warschauer Straße
	III	6	1	Warschauer Straße
Y	1/2	1	7	Rudow
		2	7	Rathaus Spandau
Zd	1/2	1	7	Rudow
		2	7	Rathaus Spandau
Zi	1	1	7	Rudow
	2	2	7	Rathaus Spandau
Zo	1	1	2	Ruhleben
	2	2	2	Pankow
Zu	1/2	1	9	Rathaus Steglitz
		2	9	Osloer Straße

Bahnhof	Kürzel DB	Kürzel	Kürzel S	Kürzel U	Tagesverkehr	Nachtverkehr Fr/Sa + Sa/So	Nachtverkehr sonstige
Adenauerplatz				Ad	U7 M19 M29 X10 109 110 310	U7 M19 M29 N10	N7 M19 M29 N10
Adlershof		BADL			S45 S46 S8 S85 S9 61 63 162 163 164 260	S46 S8 S9 N60 N65 N68	N60 N65 N68
Afrikanische Straße				Afr	U6 221	U6	N6
Ahrensfelde	BAHR	BAF			RB25 S7 197 390 901	S7 N97	N97
Ahrensfelde Friedhof	BAFR				RB25 390 901		
Ahrensfelde Nord	BAFN				RB25		
Albrechtshof	BAS				RB10 RB14 237		
Alexanderplatz	BALE	BALX		A, Al, Ap	RE1 RE2 RE7 RB14 S8 S5 S7 S9 U2 U5 U8 M2 M4 M5 M6 M48 TXL 100 200 248	S7 S9 U2 U5 U8 N2 M2 M4 M5 M48 N42 N65	N5 M2 M4 M5 M48 N42 N65
Altstadt Spandau				AS	U7 X33	U7	N7
Alt-Mariendorf				Mf	U6 M76 M77 X76 179 181 277	U6 M76 M77 N79	N6 M76 M77 N79
Alt-Reinickendorf		BARF	⇒ PB		S25 ⇒ U8 120 122 320 322	S25 ⇒ U8 N20	⇒ N8 N20
Alt-Tegel		⇒ BTG		Tg	U6 124 125 133 220 222 ⇒ S25	U6 N22 N24 N25 N33 ⇒ S25	N6 N22 N24 N25 N33
Alt-Tempelhof				At	U6 M46 140 184 246	U6 M46 N84	N6 M46 N84
Altglienicke		BAGL			S45 S9 160 ⇒ 363	S9	
Amrumer Straße				Am	U9 142 221	U9	N9
Anhalter Bahnhof		BAHU			S1 S2 S25 S26 M29 M41	S1 S2 S25 M29 M41	M29 M41
Attilastraße		BATS			S2 184 282	S2 N84	N84
Augsburger Straße				Au	U3	U3	
Babelsberg		BBAB			S7 94 99 601 602 616 619 690 693 694 715 750	S7 N13 N14 N17	N13 N14 N17
Bad Saarow	BBSP				RB35 430 431		
Bad Saarow Klinikum	BBSK				RB35 ⇒ 430 431		
Basdorf	BBAS				RB27 ⇒ 891		
Baumschulenweg		BBMW			S45 S46 S47 S8 S85 S9 170 265 365	S46 S8 S9 N70	N70
Bayerischer Platz				Bpo, Bpu	U4 U7 ⇒ M46	U7 ⇒ M46	N7 ⇒ M46
Beelitz-Heilstätten	BBEL				RE7 645		
Beelitz Stadt	BBZS				RB33 ⇒ X43 642 643 644 645 647		
Bellevue		BBEV			S3 S5 S7 S9	S7 S9	
Bergfelde		BBFE			S8 809		
Berliner Straße				Beo, Beu	U7 U9 104	U7 U9 N42	N7 N9 N42
Bernau	BBRN	BBER			RE3 RB24 S2 868 869 870 890 891 892 894 895 896 897 898 899 901 907 908 909	S2	
Bernau-Friedenstal		BBRF			S2 ⇒ 868 891 901	S2	
Bernauer Straße				B	U8 M10 247	U8 M10	N8 M10
Bestensee	BBST				RB24 724 726		
Betriebsbahnhof Rummelsburg		BRB			S3 ⇒ 194	S3	
Betriebsbahnhof Schöneweide		BSCF			S45 S46 S8 S85 S9	S46 S8 S9	
Beusselstraße		BBEU			S41 S42 S46 TXL 106 123	S41 S42 N26	N26
Biesdorf		BBDF			S5 192	S5	
Biesdorf-Süd				Bü	U5	U5	
Biesenthal	WBT				RB24 907 909 913		
Birkengrund	BBGN				RE4 701 710 720		
Birkenstein		BBIS			S5 941	S5	
Birkenstraße				Bi	U9 ⇒ M27	U9 ⇒ M27	N9 ⇒ M27
Birkenwerder	BBI	BBIW			RB20 S1 S8	S1	
Bismarckstraße				Bmo, Bmu	U2 U7 ⇒ 109	U2 U7	N2 N7
Blankenburg		BBLB			S2 S8 150 154	S2	
Blankenfelde	BBF	BBFD			RE5 RE7 S2 704 713 720 792 793 794 797	S2	
Blaschkoallee				Bl	U7 170 ⇒ 171	U7	⇒ N7
Blissestraße				Bli	U7 101 104 249 310	U7 N42	N7 N42
Blumberg	BBLU				RB24 895 899 901		
Blumberg-Rehhahn	BAHH				RB25		
Boddinstraße				Bo	U8 104 166	U8	N8
Borgsdorf		BBOR			S1 816	S1	
Bornholmer Straße		BBOS			S1 S2 S25 S26 S8 S85 M13 50	S1 S2 S25 S8 M13	M13
Borsigwerke				Bk	U6 133	U6	N6
Botanischer Garten		BBGT			S1 188 ⇒ M48	S1 N88 ⇒ M48	N88 ⇒ M48
Brandenburger Tor		BTOR		BRT	S1 S2 S25 S26 U55 TXL 100 ⇒ 200	S1 S2 S25	⇒ N2
Breitenbachplatz				Bt	U3 101 248 282	U3	N3
Brieselang	BBRI				RB10 RB14 649 656 657 667		
Britz-Süd				Br	U7 M46 181	U7 M46	M46 ⇒ N7
Buch		BBU			S2 150 158 259 353 893	S2 N58	N58
Buckower Chaussee		BBCH			S2 M11 X11 277 710 711	S2 M11	M11
Bülowstraße				Bs ⇒ Kus	U2 M19 M48 M85 106 187 ⇒ U1 U8	U2 M19 M48 ⇒ U1	N1 N2 M19 M48
Bundesplatz		BBUP		Bu	S41 S42 S46 U9 248	S41 S42 U9	N9
Bundestag				BUN	U55 ⇒ 100		
Caputh-Geltow	BCAP				RB23		
Caputh Schwielowsee	BSIS				RB23 607		
Charlottenburg	BCHB	BCHS	⇒ Wd		RE1 RE7 RB14 RB21 RB22 S3 S5 S7 S9 X49 109 309 310 ⇒ U7 M49 X34	S7 S9 ⇒ U7 M49	N7 ⇒ M49
Charlottenhof	BPDC				RE1 RB20 RB21 RB22 RB23 91 94 98 X5 580 605 606 610 631	631 N14	N14
Cottbusser Platz				C	U5 195	U5	N5
Dabendorf	BDAB				RE5 RE7 716 789 791 ⇒ 701 714		
Dahlem-Dorf				Dd	U3 M11 X83 ⇒ 110	U3 M11 ⇒ N10	N3 M11 ⇒ N10
Dahlewitz	BDT				RE5 RE7 713 792		
Dallgow-Döberitz	BDL				RE4 RB13 653 655 663 670		
Deutsche Oper				Obi	U2 ⇒ 101	U2	N2
Eberswalder Straße				EB	U2 M1 M10 12	U2 M1 M10	N2 M1 M10

Linie	Fahrtweg	Takt
M1	BPKW $\overset{3}{\leftrightarrow}$ VIN $\overset{4}{\leftrightarrow}$ BSAL $\overset{4}{\leftrightarrow}$ EB $\overset{5}{\leftrightarrow}$ Ro $\overset{2}{\leftrightarrow}$ BHKM $\overset{3}{\leftrightarrow}$ BORS $\overset{3}{\leftrightarrow}$ Ob $\overset{2}{\leftrightarrow}$ BFST	t: 7,5-10, f/a: 20, n: 30
M2	BPLA $\overset{12}{\leftrightarrow}$ BALX	t: 5-7, f/a: 10, n: 30
M4	BHH $\overset{18}{\leftrightarrow}$ BGSS $\overset{12}{\leftrightarrow}$ BALX $\overset{3}{\leftrightarrow}$ BHKM	t: 3-10, f/a: 20, n: 30
M5	BLST $\overset{13}{\leftrightarrow}$ BALX $\overset{3}{\leftrightarrow}$ BHKM $\overset{3}{\leftrightarrow}$ BORS $\overset{2}{\leftrightarrow}$ Ob $\overset{3}{\leftrightarrow}$ NA $\overset{5}{\leftrightarrow}$ BHBF	t: 5-20, f/a: 10-20, n: 30
M6	Hd $\overset{18}{\leftrightarrow}$ BMAZ $\overset{18}{\leftrightarrow}$ BLST $\overset{13}{\leftrightarrow}$ BALX $\overset{3}{\leftrightarrow}$ BHKM	t: 10, f/a: 15-20, n: 30
M8	BSPH $\overset{15}{\leftrightarrow}$ BLST $\overset{11}{\leftrightarrow}$ Lu $\overset{2}{\leftrightarrow}$ Ro $\overset{5}{\leftrightarrow}$ BNB $\overset{3}{\leftrightarrow}$ NA $\overset{4}{\leftrightarrow}$ BHBF	t: 5-10, f/a: 20, n: 30
M10	BHBF $\overset{5}{\leftrightarrow}$ NA $\overset{2}{\leftrightarrow}$ BNB $\overset{3}{\leftrightarrow}$ B $\overset{5}{\leftrightarrow}$ EB $\overset{16}{\leftrightarrow}$ Ft $\overset{5}{\leftrightarrow}$ BWRS	t: 5, f/a: 10-15, n: 30
M13	Se $\overset{5}{\leftrightarrow}$ Olo $\overset{5}{\leftrightarrow}$ BBOS $\overset{33}{\leftrightarrow}$ BFA $\overset{10}{\leftrightarrow}$ BWRS	t: 10, f/a: 20, n: 30
M17	BHH $\overset{18}{\leftrightarrow}$ BFFO $\overset{6}{\leftrightarrow}$ Tk $\overset{5}{\leftrightarrow}$ BKLH $\overset{11}{\leftrightarrow}$ BSW	t: 10, f/a: 20, n: 30
12	EB $\overset{8}{\leftrightarrow}$ BNB $\overset{3}{\leftrightarrow}$ NA $\overset{3}{\leftrightarrow}$ Ob $\overset{2}{\leftrightarrow}$ BFST	t: 10, f/a: 20
16	BMAZ $\overset{23}{\leftrightarrow}$ BFA	t: 10, f/a: 20, So: –
18	Hd $\overset{20}{\leftrightarrow}$ BSPH	H: 10, N: 20, So: –
21	BLI $\overset{22}{\leftrightarrow}$ Ft $\overset{9}{\leftrightarrow}$ BRH $\overset{19}{\leftrightarrow}$ BSW	t/f/a: 20
27	BFFO $\overset{6}{\leftrightarrow}$ Tk $\overset{5}{\leftrightarrow}$ BKLH	t/f/a: 20
37	BLI $\overset{11}{\leftrightarrow}$ BFFO $\overset{6}{\leftrightarrow}$ Tk $\overset{5}{\leftrightarrow}$ BKLH $\overset{11}{\leftrightarrow}$ BSW	t: 20, Sa/So: –

Linie	Fahrtweg	Takt
M48	BRST $\overset{4}{\leftrightarrow}$ Slo $\overset{2}{\leftrightarrow}$ Wsg $\overset{5}{\leftrightarrow}$ BIP $\overset{7}{\leftrightarrow}$ Kt $\overset{3}{\leftrightarrow}$ BS $\overset{1}{\leftrightarrow}$ Kus $\overset{8}{\leftrightarrow}$ BPOP $\overset{4}{\leftrightarrow}$ Mi $\overset{2}{\leftrightarrow}$ Sp $\overset{7}{\leftrightarrow}$ BALX	t: 10, f/a: 20, n: 30
M49	BHST $\overset{3}{\leftrightarrow}$ Th $\overset{4}{\leftrightarrow}$ BMN $\overset{6}{\leftrightarrow}$ Wd $\overset{7}{\leftrightarrow}$ BZOS	t: 10, f/a: 20, n: 30
M76	Wsg $\overset{2}{\leftrightarrow}$ BFB $\overset{6}{\leftrightarrow}$ BPRI $\overset{11}{\leftrightarrow}$ Mf $\overset{22}{\leftrightarrow}$ BLRD	t: 5-10, f/a: 20, n: 30
M77	Mf $\overset{8}{\leftrightarrow}$ BMF	t: 10, f/a: 20, n: 30
M82	BRST $\overset{10}{\leftrightarrow}$ BLAK	t: 6-10, f/a: 20, n: 30
M85	BLIS $\overset{24}{\leftrightarrow}$ BRST $\overset{4}{\leftrightarrow}$ Slo $\overset{2}{\leftrightarrow}$ Wsg $\overset{5}{\leftrightarrow}$ BIP $\overset{7}{\leftrightarrow}$ Kt $\overset{3}{\leftrightarrow}$ BS $\overset{1}{\leftrightarrow}$ Kus $\overset{8}{\leftrightarrow}$ BPOP $\overset{6}{\leftrightarrow}$ BHBF	t: 10, f/a: 20, n: 30
TXL	TXL $\overset{8}{\leftrightarrow}$ BBEU $\overset{6}{\leftrightarrow}$ Tm $\overset{6}{\leftrightarrow}$ BHBF $\overset{9}{\leftrightarrow}$ BTOR $\overset{2}{\leftrightarrow}$ ULO $\overset{2}{\leftrightarrow}$ MIN $\overset{4}{\leftrightarrow}$ BALX	t: 6, f/a: 10
X7	R $\overset{7}{\leftrightarrow}$ SXF	t: 10, f/a: 20
X9	TXL $\overset{4}{\leftrightarrow}$ JK $\overset{4}{\leftrightarrow}$ BJUN $\overset{8}{\leftrightarrow}$ RP $\overset{4}{\leftrightarrow}$ BZOS	t: 10, a: 20
X10	BZOS $\overset{3}{\leftrightarrow}$ Kfo $\overset{1}{\leftrightarrow}$ U $\overset{5}{\leftrightarrow}$ Ad $\overset{3}{\leftrightarrow}$ BHAL $\overset{12}{\leftrightarrow}$ Os $\overset{7}{\leftrightarrow}$ BZD ($\overset{12}{\leftrightarrow}$ BTLS, nur zur HVZ)	t: 10-20, f/a: 20
X11	K $\overset{10}{\leftrightarrow}$ BSDG $\overset{14}{\leftrightarrow}$ BLIO $\overset{12}{\leftrightarrow}$ BBCH $\overset{12}{\leftrightarrow}$ Jt $\overset{15}{\leftrightarrow}$ BSW	t: 10-20, f/a: 20
X21	BWIN $\overset{6}{\leftrightarrow}$ BKBO $\overset{4}{\leftrightarrow}$ Sch $\overset{8}{\leftrightarrow}$ JK	t: 10, f/a: 20
X33	BSPA $\overset{2}{\leftrightarrow}$ AS $\overset{3}{\leftrightarrow}$ Zi $\overset{2}{\leftrightarrow}$ Hs $\overset{17}{\leftrightarrow}$ Hh $\overset{8}{\leftrightarrow}$ RR $\overset{3}{\leftrightarrow}$ BWIN	t: 6-10, f/a: 20
X34	BHST $\overset{2}{\leftrightarrow}$ Th $\overset{3}{\leftrightarrow}$ BMN $\overset{5}{\leftrightarrow}$ Wd $\overset{7}{\leftrightarrow}$ BZOS	t: 10, f/a: 20
X36	BSPA $\overset{18}{\leftrightarrow}$ Hs	t: 10, Sa-So: –

Linie	Fahrtweg	Takt
120	BWIN $\overset{9}{\leftrightarrow}$ PB $\overset{13}{\leftrightarrow}$ Se $\overset{4}{\leftrightarrow}$ Lpo $\overset{3}{\leftrightarrow}$ BWED $\overset{3}{\leftrightarrow}$ Ri $\overset{7}{\leftrightarrow}$ BHBF	t: 10-20, f/a: 20
122	Sch $\overset{5}{\leftrightarrow}$ PB $\overset{7}{\leftrightarrow}$ RE $\overset{6}{\leftrightarrow}$ BWM $\overset{28}{\leftrightarrow}$ BWIN	t: 5-20, f/a: 20
123	BHBF $\overset{15}{\leftrightarrow}$ Tm $\overset{6}{\leftrightarrow}$ BBEU $\overset{16}{\leftrightarrow}$ JK $\overset{5}{\leftrightarrow}$ Hl $\overset{5}{\leftrightarrow}$ Sie $\overset{3}{\leftrightarrow}$ Rm	t: 10-20, f/a: 20
124	BWIN $\overset{10}{\leftrightarrow}$ BTG $\overset{4}{\leftrightarrow}$ Tg $\overset{9}{\leftrightarrow}$ BSZF $\overset{4}{\leftrightarrow}$ BHLS	t: 10-20, f/a: 20
125	Olo $\overset{10}{\leftrightarrow}$ RE $\overset{9}{\leftrightarrow}$ Sch $\overset{22}{\leftrightarrow}$ BTG $\overset{4}{\leftrightarrow}$ Tg $\overset{22}{\leftrightarrow}$ BFOH	t: 10-20, f/a: 20
128	TXL $\overset{9}{\leftrightarrow}$ Sch $\overset{12}{\leftrightarrow}$ FN $\overset{3}{\leftrightarrow}$ Olo	t: 10, f/a: 20-30
130	BSPA $\overset{5}{\leftrightarrow}$ BSRW ($\overset{8}{\leftrightarrow}$ Rl, nur Mo-Fr zur HVZ)	t: 10-20, f/a: 20
133	Tg $\overset{3}{\leftrightarrow}$ BTG $\overset{4}{\leftrightarrow}$ Bk $\overset{4}{\leftrightarrow}$ Hh $\overset{17}{\leftrightarrow}$ Hh	t: 10-20, f/a: 20
136	BRST $\overset{32}{\leftrightarrow}$ BHD	H: 20, N: 30-60
139	P $\overset{2}{\leftrightarrow}$ Rm $\overset{2}{\leftrightarrow}$ Sie $\overset{11}{\leftrightarrow}$ Kd $\overset{3}{\leftrightarrow}$ BMN	t: 20
140	BTHF $\overset{2}{\leftrightarrow}$ At $\overset{14}{\leftrightarrow}$ Me $\overset{1}{\leftrightarrow}$ Gs $\overset{6}{\leftrightarrow}$ Pr $\overset{7}{\leftrightarrow}$ Kbo $\overset{12}{\leftrightarrow}$ BOSB	t: 10-20, f/a: 20
142	BOSB $\overset{5}{\leftrightarrow}$ Sr $\overset{10}{\leftrightarrow}$ Lu $\overset{2}{\leftrightarrow}$ Ro $\overset{4}{\leftrightarrow}$ Ob $\overset{8}{\leftrightarrow}$ BHBF ($\overset{10}{\leftrightarrow}$ Am $\overset{3}{\leftrightarrow}$ Lpo, nur Mo-Sa tagsüber)	t: 20, a/f: 20
147	BHBF $\overset{8}{\leftrightarrow}$ BFST $\overset{1}{\leftrightarrow}$ ULO $\overset{3}{\leftrightarrow}$ Fr $\overset{5}{\leftrightarrow}$ Mk ($\overset{10}{\leftrightarrow}$ BOSB, nur Mo-Sa tagsüber)	t: 10-20, a/f: 20
150	Olo $\overset{6}{\leftrightarrow}$ BSNH $\overset{15}{\leftrightarrow}$ BBLB $\overset{26}{\leftrightarrow}$ BBU	H: 10, N: 20
154	BBLB $\overset{25}{\leftrightarrow}$ BHH $\overset{11}{\leftrightarrow}$ BRWA $\overset{17}{\leftrightarrow}$ E	t: 20, a/f: 20-30

Linie	Fahrtweg	Takt
186	BGWD $\overset{14}{\leftrightarrow}$ Rd $\overset{4}{\leftrightarrow}$ Fw $\overset{5}{\leftrightarrow}$ Wsg $\overset{2}{\leftrightarrow}$ Slo $\overset{5}{\leftrightarrow}$ BRST $\overset{16}{\leftrightarrow}$ BOSS $\overset{4}{\leftrightarrow}$ BLIS	t: 5-20, a/f: 20
187	Tm $\overset{17}{\leftrightarrow}$ Nm $\overset{2}{\leftrightarrow}$ BS $\overset{3}{\leftrightarrow}$ Kt $\overset{7}{\leftrightarrow}$ BIP $\overset{3}{\leftrightarrow}$ BFRU $\overset{14}{\leftrightarrow}$ BLAK	H: 5-20, N: 20
188	BRST $\overset{5}{\leftrightarrow}$ BBGT	H: 10, N: 20
190	E $\overset{14}{\leftrightarrow}$ BWHH	t: 20, f/a: 20
191	BMAZ $\overset{17}{\leftrightarrow}$ KL $\overset{5}{\leftrightarrow}$ BWT	H: 10-20, N: 20
192	BFFO $\overset{12}{\leftrightarrow}$ BBDF $\overset{16}{\leftrightarrow}$ BMAZ	H: 10-20, N: 20
194	Hpo $\overset{18}{\leftrightarrow}$ BTP $\overset{5}{\leftrightarrow}$ BOK $\overset{3}{\leftrightarrow}$ BRH $\overset{1}{\leftrightarrow}$ BNPL $\overset{9}{\leftrightarrow}$ Fi $\overset{8}{\leftrightarrow}$ BFFO $\overset{7}{\leftrightarrow}$ BSPH	H: 10-20, N: 20
195	BMAZ $\overset{17}{\leftrightarrow}$ C $\overset{1}{\leftrightarrow}$ Hd $\overset{6}{\leftrightarrow}$ LL $\overset{11}{\leftrightarrow}$ BMDF	H: 6-7, N: 10, f/a: 20
197	BMDF $\overset{10}{\leftrightarrow}$ BKAD $\overset{3}{\leftrightarrow}$ KL $\overset{2}{\leftrightarrow}$ GK $\overset{20}{\leftrightarrow}$ BMEA $\overset{10}{\leftrightarrow}$ BAF $\overset{13}{\leftrightarrow}$ BHH	H: 10, N: 20
200	BZOS $\overset{14}{\leftrightarrow}$ BPOP $\overset{3}{\leftrightarrow}$ MH $\overset{4}{\leftrightarrow}$ ULO $\overset{2}{\leftrightarrow}$ MIN $\overset{5}{\leftrightarrow}$ BALX	t: 10, f/a: 20
204	BSKR $\overset{5}{\leftrightarrow}$ BJLB $\overset{4}{\leftrightarrow}$ Kt $\overset{9}{\leftrightarrow}$ Sno $\overset{2}{\leftrightarrow}$ Kfo $\overset{3}{\leftrightarrow}$ BZOS	t: 20, So: –
218	BMN $\overset{4}{\leftrightarrow}$ Th $\overset{3}{\leftrightarrow}$ BHST $\overset{30}{\leftrightarrow}$ BWSS	Mo-Fr: 60/120, Sa/So: 30/60
220	BFOH $\overset{19}{\leftrightarrow}$ BWIN $\overset{6}{\leftrightarrow}$ RR ($\overset{9}{\leftrightarrow}$ BTG $\overset{4}{\leftrightarrow}$ Tg, nur Mo-Sa tagsüber)	t: 20, f/a: 20
221	BWIN $\overset{4}{\leftrightarrow}$ RR $\overset{4}{\leftrightarrow}$ BEBD $\overset{4}{\leftrightarrow}$ Scha $\overset{5}{\leftrightarrow}$ Sch $\overset{2}{\leftrightarrow}$ Afr $\overset{8}{\leftrightarrow}$ Am $\overset{6}{\leftrightarrow}$ Lpo	t: 10-20, f/a: 20
222	Tg $\overset{3}{\leftrightarrow}$ BTG $\overset{9}{\leftrightarrow}$ BWAI	t: 10-20, f/a: 20

Linie	Fahrtweg	Takt
50	BPDH $\overset{7}{\leftrightarrow}$ BPKW $\overset{3}{\leftrightarrow}$ VIN $\overset{7}{\leftrightarrow}$ BBOS $\overset{5}{\leftrightarrow}$ Olo $\overset{5}{\leftrightarrow}$ Se	t: 10, f/a: 20
60	BSW $\overset{28}{\leftrightarrow}$ BFRH	t: 20
61	BADL $\overset{6}{\leftrightarrow}$ BSPF $\overset{24}{\leftrightarrow}$ BFRH	t: 20
62	BKPK $\overset{20}{\leftrightarrow}$ BMDF	t: 20
63	BADL $\overset{6}{\leftrightarrow}$ BSPF $\overset{13}{\leftrightarrow}$ BKPK	t: 20
68	BKPK $\overset{19}{\leftrightarrow}$ BGAS	t: 20
M11	Dd $\overset{7}{\leftrightarrow}$ BLWE $\overset{10}{\leftrightarrow}$ BLIO $\overset{15}{\leftrightarrow}$ BBCH $\overset{15}{\leftrightarrow}$ Jt $\overset{22}{\leftrightarrow}$ BSW	t: 10, f/a: 20, n: 30
M19	BGWD $\overset{9}{\leftrightarrow}$ BHAL $\overset{4}{\leftrightarrow}$ Ad $\overset{6}{\leftrightarrow}$ U $\overset{2}{\leftrightarrow}$ Kfo $\overset{4}{\leftrightarrow}$ Wt $\overset{2}{\leftrightarrow}$ Nm $\overset{2}{\leftrightarrow}$ BS $\overset{4}{\leftrightarrow}$ BGGS $\overset{1}{\leftrightarrow}$ BYOR $\overset{3}{\leftrightarrow}$ Me	t: 10, f/a: 20, n: 30
M21	BWIN $\overset{8}{\leftrightarrow}$ BKBO $\overset{5}{\leftrightarrow}$ Sch $\overset{9}{\leftrightarrow}$ JK $\overset{4}{\leftrightarrow}$ BJUN	t: 10, f/a: 20, n: 30
M27	BPKW $\overset{6}{\leftrightarrow}$ BWOK $\overset{6}{\leftrightarrow}$ Pk $\overset{5}{\leftrightarrow}$ BWED $\overset{1}{\leftrightarrow}$ Ri $\overset{12}{\leftrightarrow}$ Tm $\overset{11}{\leftrightarrow}$ Mp $\overset{4}{\leftrightarrow}$ BJUN	t: 6-7, f/a: 10-20, n: 30
M29	BHAL $\overset{4}{\leftrightarrow}$ Ad $\overset{6}{\leftrightarrow}$ U $\overset{2}{\leftrightarrow}$ Kfo $\overset{4}{\leftrightarrow}$ Wt $\overset{8}{\leftrightarrow}$ MB $\overset{3}{\leftrightarrow}$ BAHU $\overset{4}{\leftrightarrow}$ Ks $\overset{5}{\leftrightarrow}$ Mr $\overset{7}{\leftrightarrow}$ Gr $\overset{10}{\leftrightarrow}$ Hpo	t: 5-10, f/a: 10-20, n: 30
M32	BSPA $\overset{15}{\leftrightarrow}$ BSTA	t: 5-7, f/a: 10-20, n: 30
M41	BKHD $\overset{4}{\leftrightarrow}$ BSO $\overset{10}{\leftrightarrow}$ Hpo $\overset{11}{\leftrightarrow}$ Ho $\overset{4}{\leftrightarrow}$ BAHU $\overset{2}{\leftrightarrow}$ BPOP $\overset{7}{\leftrightarrow}$ BHBF	t: 4-10, f/a: 20, n: 30
M45	BSPA $\overset{11}{\leftrightarrow}$ Rl $\overset{10}{\leftrightarrow}$ BWES $\overset{7}{\leftrightarrow}$ Rw $\overset{5}{\leftrightarrow}$ RP $\overset{4}{\leftrightarrow}$ BZOS	t: 6-10, f/a: 20, n: 30
M46	BZOS $\overset{3}{\leftrightarrow}$ Kfo $\overset{4}{\leftrightarrow}$ Wt $\overset{11}{\leftrightarrow}$ BSGR $\overset{4}{\leftrightarrow}$ BSKR $\overset{9}{\leftrightarrow}$ At $\overset{16}{\leftrightarrow}$ Pi $\overset{8}{\leftrightarrow}$ Br	t: 5-10, f/a: 20, n: 30

Linie	Fahrtweg	Takt
X49	BHST $\overset{2}{\leftrightarrow}$ Th $\overset{3}{\leftrightarrow}$ BMN $\overset{4}{\leftrightarrow}$ BCHS	H: 10-20, So: –
X54	BPKW $\overset{25}{\leftrightarrow}$ BHH $\overset{9}{\leftrightarrow}$ BRWA $\overset{4}{\leftrightarrow}$ BMAZ ($\overset{14}{\leftrightarrow}$ Hd, nur Mo-Sa)	t: 10-20, f/a: 20
X69	BMEA $\overset{18}{\leftrightarrow}$ E $\overset{13}{\leftrightarrow}$ BKPK	t: 20
X76	Wsg $\overset{2}{\leftrightarrow}$ BFB $\overset{4}{\leftrightarrow}$ BPRI $\overset{11}{\leftrightarrow}$ Mf	t: 20, So: –
X83	Dd $\overset{8}{\leftrightarrow}$ BRST $\overset{8}{\leftrightarrow}$ BLAK $\overset{19}{\leftrightarrow}$ BSC	t: 5-10, f/a: 20
100	BZOS $\overset{17}{\leftrightarrow}$ BTOR $\overset{2}{\leftrightarrow}$ ULO $\overset{2}{\leftrightarrow}$ MIN $\overset{5}{\leftrightarrow}$ BALX	t: 5-10, f/a: 20
101	Tm $\overset{23}{\leftrightarrow}$ Kn $\overset{2}{\leftrightarrow}$ Fpo $\overset{2}{\leftrightarrow}$ Bli $\overset{8}{\leftrightarrow}$ Bt $\overset{16}{\leftrightarrow}$ BZD	t: 10-20, f/a: 20
104	Nd $\overset{4}{\leftrightarrow}$ Th $\overset{7}{\leftrightarrow}$ BHAL $\overset{8}{\leftrightarrow}$ Fpo $\overset{2}{\leftrightarrow}$ Bli $\overset{3}{\leftrightarrow}$ Beo $\overset{11}{\leftrightarrow}$ BJLB $\overset{16}{\leftrightarrow}$ PL $\overset{8}{\leftrightarrow}$ Bo $\overset{6}{\leftrightarrow}$ Rk $\overset{11}{\leftrightarrow}$ BTP	t: 5-20, f/a: 20
106	Se $\overset{11}{\leftrightarrow}$ BBEU $\overset{10}{\leftrightarrow}$ Ha $\overset{9}{\leftrightarrow}$ Nm $\overset{2}{\leftrightarrow}$ BS $\overset{3}{\leftrightarrow}$ Kt $\overset{3}{\leftrightarrow}$ BJLB $\overset{5}{\leftrightarrow}$ BSKR	t: 20, f/a: 20
108	BLI $\overset{14}{\leftrightarrow}$ E	t: 10-20, f/a: 20
109	TXL $\overset{5}{\leftrightarrow}$ JK $\overset{2}{\leftrightarrow}$ BJUN $\overset{11}{\leftrightarrow}$ BCHS $\overset{2}{\leftrightarrow}$ Ad $\overset{5}{\leftrightarrow}$ U $\overset{2}{\leftrightarrow}$ Kfo $\overset{2}{\leftrightarrow}$ BZOS	t: 10, f/a: 20
110	BZOS $\overset{3}{\leftrightarrow}$ Kfo $\overset{1}{\leftrightarrow}$ U $\overset{5}{\leftrightarrow}$ Ad $\overset{19}{\leftrightarrow}$ T $\overset{2}{\leftrightarrow}$ Os	t: 20, f/a: 20
112	BNIS $\overset{15}{\leftrightarrow}$ BZD $\overset{19}{\leftrightarrow}$ BOSS	t: 10-20, f/a: 20
115	BZD $\overset{7}{\leftrightarrow}$ Os $\overset{14}{\leftrightarrow}$ BHO $\overset{3}{\leftrightarrow}$ Fpo	t: 10-20, f/a: 20-30
118	Ot $\overset{5}{\leftrightarrow}$ K $\overset{2}{\leftrightarrow}$ BMEX $\overset{16}{\leftrightarrow}$ BWSS	t: 10-20, f/a: 20

Linie	Fahrtweg	Takt
156	BSTO $\overset{4}{\leftrightarrow}$ BLST $\overset{11}{\leftrightarrow}$ BPLA	t: 20, So: –
160	BSW $\overset{25}{\leftrightarrow}$ BAGL	t: 20, a/f: 20
161	BRD $\overset{12}{\leftrightarrow}$ BWIG $\overset{12}{\leftrightarrow}$ BE	t: 20
162	BADL $\overset{14}{\leftrightarrow}$ R	H: 10, N: 20
163	BSW $\overset{10}{\leftrightarrow}$ BADL $\overset{14}{\leftrightarrow}$ BGAS $\overset{15}{\leftrightarrow}$ BFLH	t/f: 20, a: 30, Sa/So: 30
164	BKPK $\overset{18}{\leftrightarrow}$ BADL $\overset{16}{\leftrightarrow}$ BFLH $\overset{3}{\leftrightarrow}$ SXF	t: 20, f/a: 20
165	Mk $\overset{2}{\leftrightarrow}$ He $\overset{6}{\leftrightarrow}$ S $\overset{7}{\leftrightarrow}$ BTP $\overset{5}{\leftrightarrow}$ BPWD $\overset{9}{\leftrightarrow}$ BSW $\overset{11}{\leftrightarrow}$ BSPF	H: 10-20, N: 20
166	BSW $\overset{15}{\leftrightarrow}$ BPWD $\overset{6}{\leftrightarrow}$ BTP $\overset{11}{\leftrightarrow}$ Rk $\overset{5}{\leftrightarrow}$ Bo	t: 20
169	E $\overset{18}{\leftrightarrow}$ BKPK	H: 10, N: 20
170	BRST $\overset{9}{\leftrightarrow}$ BPRI $\overset{7}{\leftrightarrow}$ Ull $\overset{14}{\leftrightarrow}$ Bl $\overset{11}{\leftrightarrow}$ BBMW	t: 10-20, f/a: 20-30
171	Hpo $\overset{18}{\leftrightarrow}$ BSO $\overset{5}{\leftrightarrow}$ BNK $\overset{3}{\leftrightarrow}$ Gz $\overset{23}{\leftrightarrow}$ R $\overset{9}{\leftrightarrow}$ BFLH $\overset{3}{\leftrightarrow}$ SXF	H: 10-20, N: 20
172	R $\overset{23}{\leftrightarrow}$ Jt $\overset{27}{\leftrightarrow}$ BLRD	H: 10, N: 10-20
175	BLRD $\overset{23}{\rightarrow}$ BLRD $\overset{5}{\rightarrow}$ BSC $\overset{8}{\rightarrow}$ BLRD	H: 10-28, N: 20
181	Wsg $\overset{1}{\leftrightarrow}$ BFB $\overset{13}{\leftrightarrow}$ BLAK $\overset{12}{\leftrightarrow}$ Mf $\overset{12}{\leftrightarrow}$ Br	t: 5-10, f/a: 20
184	BLIO $\overset{10}{\leftrightarrow}$ BATS $\overset{9}{\leftrightarrow}$ Ka $\overset{3}{\leftrightarrow}$ At $\overset{2}{\leftrightarrow}$ BTHF ($\overset{7}{\leftrightarrow}$ BSKR, nur Mo-Sa tagsüber)	t: 10-20, a/f: 20

Linie	Fahrtweg	Takt
236	BSPA $\overset{21}{\leftrightarrow}$ Hs	t: 10-20, f/a: 20
237	BSPA $\overset{19}{\leftrightarrow}$ BAS	t: 10-20, f/a: 20
240	BOSB $\overset{17}{\leftrightarrow}$ BRH $\overset{1}{\leftrightarrow}$ BNPL $\overset{6}{\leftrightarrow}$ BLI $\overset{5}{\leftrightarrow}$ Md $\overset{11}{\leftrightarrow}$ BSTO	t: 10-20, f/a: 20
245	BZOS $\overset{5}{\leftrightarrow}$ RP $\overset{13}{\leftrightarrow}$ Tm $\overset{9}{\leftrightarrow}$ BHBF	t: 5-20, f/a: 20
246	Fw $\overset{12}{\leftrightarrow}$ BPRI $\overset{11}{\leftrightarrow}$ At $\overset{10}{\leftrightarrow}$ BHER	H: 10, N: 20
247	Lpo $\overset{4}{\leftrightarrow}$ Np $\overset{3}{\leftrightarrow}$ BWED $\overset{3}{\leftrightarrow}$ BHUM $\overset{3}{\leftrightarrow}$ BGB $\overset{9}{\leftrightarrow}$ B $\overset{1}{\leftrightarrow}$ Vo $\overset{7}{\leftrightarrow}$ BNB	t: 10-20, f/a: 20
248	BWRS $\overset{6}{\leftrightarrow}$ BOSB $\overset{4}{\leftrightarrow}$ BJB $\overset{2}{\leftrightarrow}$ BALX $\overset{5}{\leftrightarrow}$ Sp $\overset{9}{\leftrightarrow}$ Ho $\overset{4}{\leftrightarrow}$ Gs $\overset{7}{\leftrightarrow}$ PL $\overset{9}{\leftrightarrow}$ BSKR ($\overset{4}{\leftrightarrow}$ BSGR $\overset{3}{\leftrightarrow}$ BIP $\overset{4}{\leftrightarrow}$ BBUP $\overset{6}{\leftrightarrow}$ Bt, nur Mo-Sa tagsüber)	t: 10-20, f/a: 20
249	BZOS $\overset{3}{\leftrightarrow}$ Kfo $\overset{6}{\leftrightarrow}$ Hz $\overset{3}{\leftrightarrow}$ Bli $\overset{4}{\leftrightarrow}$ BHEI	t: 10, f/a: 20
250	BPKW $\overset{8}{\leftrightarrow}$ VIN ($\overset{11}{\leftrightarrow}$ BWOK $\overset{7}{\leftrightarrow}$ FN, nur Mo-Sa tagsüber)	t: 10-20, f/a: 20
255	BPKW $\overset{7}{\leftrightarrow}$ BWOK $\overset{7}{\leftrightarrow}$ Olo	t: 10, f/a: 20
256	BWAB $\overset{4}{\leftrightarrow}$ BHH $\overset{26}{\leftrightarrow}$ BLI	t: 20, f/a: 20
260	BADL $\overset{24}{\leftrightarrow}$ R	t: 10-20, f/a: 20
265	BSW $\overset{16}{\leftrightarrow}$ BBMW $\overset{11}{\leftrightarrow}$ BTP $\overset{7}{\leftrightarrow}$ S $\overset{6}{\leftrightarrow}$ He $\overset{2}{\leftrightarrow}$ Mk ($\overset{3}{\leftrightarrow}$ Sp $\overset{3}{\leftrightarrow}$ Mi, nur Mo-Sa tagsüber)	t: 20, f/a: 20
269	KL $\overset{3}{\leftrightarrow}$ BKAD $\overset{21}{\leftrightarrow}$ BKPK	t: 20, f/a: 20

Linie	Fahrtweg	Takt
277	BHER $\overset{15}{\leftrightarrow}$ Mf $\overset{13}{\leftrightarrow}$ BBCH	H: 10, N: 20
282	Bt $\overset{5}{\leftrightarrow}$ Slo $\overset{4}{\leftrightarrow}$ BRST $\overset{8}{\leftrightarrow}$ BSDE $\overset{2}{\leftrightarrow}$ BATS $\overset{7}{\leftrightarrow}$ Wl	t: 10, f/a: 20
283	BRST $\overset{16}{\leftrightarrow}$ BLAK $\overset{11}{\leftrightarrow}$ BMF	H: 10-20, N: 20
284	BLIS $\overset{10}{\leftrightarrow}$ BLIO $\overset{6}{\leftrightarrow}$ BLAK ($\overset{10}{\leftrightarrow}$ BRST, nur Mo-Sa tagsüber)	t: 20, f/a: 20
285	Os $\overset{6}{\leftrightarrow}$ BZD $\overset{29}{\leftrightarrow}$ BRST	t: 10-20, f/a: 20, Sa-So: –
291	BMAZ $\overset{4}{\leftrightarrow}$ BPOE $\overset{12}{\leftrightarrow}$ KL $\overset{4}{\leftrightarrow}$ BWT	t: 20, So: –
296	BLI $\overset{4}{\leftrightarrow}$ Fi $\overset{10}{\leftrightarrow}$ Tk $\overset{13}{\leftrightarrow}$ BKLH	t: 10-20, f/a: 20
309	BCHS $\overset{7}{\leftrightarrow}$ So	t: 20
310	BCHS $\overset{3}{\leftrightarrow}$ Ad $\overset{18}{\leftrightarrow}$ BHEI $\overset{6}{\leftrightarrow}$ Bli	H: 20, N: –, Sa-So: –
322	PB $\overset{2}{\leftrightarrow}$ LD $\overset{6}{\leftrightarrow}$ BEBD $\overset{6}{\leftrightarrow}$ RR $\overset{7}{\leftrightarrow}$ BWAI	t: 20, Sa-So: –
327	Lpo $\overset{4}{\leftrightarrow}$ Np $\overset{5}{\leftrightarrow}$ FN $\overset{3}{\leftrightarrow}$ RE $\overset{9}{\leftrightarrow}$ BSNH	t: 20, So: –
337	BFKS $\overset{29}{\leftrightarrow}$ BSPA	H: 20, N: 30, a/So: 60
347	BOK $\overset{9}{\leftrightarrow}$ BWRS ($\overset{6}{\leftrightarrow}$ WR $\overset{5}{\leftrightarrow}$ BOSB, nur Mo-Sa tagsüber)	t: 20, a/f: 20
349	BGWD $\overset{3}{\rightarrow}$ BMS $\overset{8}{\rightarrow}$ Th $\overset{4}{\rightarrow}$ Nd $\overset{5}{\rightarrow}$ BHST $\overset{3}{\rightarrow}$ Th $\overset{5}{\rightarrow}$ BMS $\overset{2}{\rightarrow}$ BGWD	t: 40, Sa-So: –
373	R $\overset{5}{\rightarrow}$ Zd $\overset{9}{\rightarrow}$ La $\overset{5}{\rightarrow}$ La $\overset{8}{\rightarrow}$ Zd $\overset{8}{\rightarrow}$ R	t: 20, So: –

Linie	Fahrtweg	Takt
N7	BSPA $\overset{2}{\leftrightarrow}$ AS $\overset{1}{\leftrightarrow}$ Zi $\overset{2}{\leftrightarrow}$ Hs $\overset{2}{\leftrightarrow}$ P $\overset{2}{\leftrightarrow}$ Rm $\overset{2}{\leftrightarrow}$ Sie $\overset{5}{\leftrightarrow}$ JK $\overset{3}{\leftrightarrow}$ BJUN $\overset{2}{\leftrightarrow}$ Mp $\overset{2}{\leftrightarrow}$ Rw $\overset{2}{\leftrightarrow}$ Bmo $\overset{3}{\leftrightarrow}$ BCHS $\overset{5}{\leftrightarrow}$ Ad $\overset{3}{\leftrightarrow}$ Kn $\overset{1}{\leftrightarrow}$ Fpo $\overset{2}{\leftrightarrow}$ Bli $\overset{7}{\leftrightarrow}$ Beo $\overset{1}{\leftrightarrow}$ Bpo $\overset{1}{\leftrightarrow}$ Ei $\overset{2}{\leftrightarrow}$ Kt $\overset{2}{\leftrightarrow}$ BGGS $\overset{1}{\leftrightarrow}$ BYOR $\overset{3}{\leftrightarrow}$ Me $\overset{2}{\leftrightarrow}$ Gs $\overset{3}{\leftrightarrow}$ Sü $\overset{5}{\leftrightarrow}$ Hpo $\overset{3}{\leftrightarrow}$ Hpo $\overset{3}{\leftrightarrow}$ Rk $\overset{7}{\leftrightarrow}$ BNK $\overset{2}{\leftrightarrow}$ Gz $\overset{17}{\leftrightarrow}$ R	n: 30, WE: –
N7	R $\overset{8}{\leftrightarrow}$ BFLH $\overset{2}{\leftrightarrow}$ SXF	n: 30
N8	BWIN $\overset{3}{\leftrightarrow}$ RR $\overset{3}{\leftrightarrow}$ BKBO $\overset{2}{\leftrightarrow}$ LD $\overset{2}{\leftrightarrow}$ PB $\overset{3}{\leftrightarrow}$ RE $\overset{2}{\leftrightarrow}$ FN $\overset{4}{\leftrightarrow}$ Olo $\overset{3}{\leftrightarrow}$ Pk $\overset{2}{\leftrightarrow}$ BGB $\overset{3}{\leftrightarrow}$ Vo $\overset{1}{\leftrightarrow}$ B $\overset{2}{\leftrightarrow}$ Ro $\overset{1}{\leftrightarrow}$ W $\overset{4}{\leftrightarrow}$ BHKM $\overset{4}{\leftrightarrow}$ BJB $\overset{2}{\leftrightarrow}$ He $\overset{2}{\leftrightarrow}$ Mr $\overset{5-6}{\leftrightarrow}$ Kbo $\overset{2-3}{\leftrightarrow}$ ST $\overset{2}{\leftrightarrow}$ Hpo $\overset{1}{\leftrightarrow}$ Bo $\overset{2}{\leftrightarrow}$ L $\overset{2}{\leftrightarrow}$ BHER	n: 10-30, WE: –
N9	Olo $\overset{3}{\leftrightarrow}$ Np $\overset{5}{\leftrightarrow}$ Lpo $\overset{2}{\leftrightarrow}$ Am $\overset{2}{\leftrightarrow}$ BWF $\overset{1}{\leftrightarrow}$ Bi $\overset{1}{\leftrightarrow}$ Tm $\overset{3}{\leftrightarrow}$ BTGN $\overset{7}{\leftrightarrow}$ BZOS $\overset{2}{\leftrightarrow}$ Kfo $\overset{3}{\leftrightarrow}$ Sno $\overset{1}{\leftrightarrow}$ Gt $\overset{2}{\leftrightarrow}$ Beo $\overset{3}{\leftrightarrow}$ BBUP $\overset{2}{\leftrightarrow}$ Fw $\overset{3}{\leftrightarrow}$ Wsg $\overset{1}{\leftrightarrow}$ Slo $\overset{3}{\leftrightarrow}$ BRST	n: 15-30, WE: –
N10	BZOS $\overset{2}{\leftrightarrow}$ Kfo $\overset{1}{\leftrightarrow}$ U $\overset{5}{\leftrightarrow}$ Ad $\overset{5}{\leftrightarrow}$ BHO $\overset{13}{\leftrightarrow}$ Os $\overset{9}{\leftrightarrow}$ BZD	n: 30
N16	BNIS $\overset{4}{\leftrightarrow}$ BWSS $\overset{21}{\leftrightarrow}$ BPDH	n: 60
N20	BFOH $\overset{13}{\leftrightarrow}$ BWIN $\overset{7}{\leftrightarrow}$ PB $\overset{9}{\leftrightarrow}$ Se $\overset{4-8}{\leftrightarrow}$ Lpo $\overset{1-6}{\leftrightarrow}$ BWED $\overset{1}{\leftrightarrow}$ Ri $\overset{6}{\leftrightarrow}$ BHBF	n: 30
N22	Tg $\overset{3}{\leftrightarrow}$ BTG $\overset{8}{\leftrightarrow}$ BWAI	n: 30
N24	BWIN $\overset{9}{\leftrightarrow}$ BTG $\overset{3-8}{\leftrightarrow}$ Tg $\overset{8-13}{\leftrightarrow}$ BSZF $\overset{4}{\leftrightarrow}$ BHLS	n: 30
N25	BTG $\overset{2}{\leftrightarrow}$ Tg $\overset{10}{\leftrightarrow}$ BHED	n: 30

Linie	Fahrtweg	Takt
N79	BPWA $\overset{5}{\leftrightarrow}$ BSO $\overset{2}{\leftrightarrow}$ BNK $\overset{5}{\leftrightarrow}$ BHER $\overset{11}{\leftrightarrow}$ Mf	n: 30
N81	Wsg $\overset{1}{\leftrightarrow}$ BFB $\overset{11}{\leftrightarrow}$ BLAK $\overset{11}{\leftrightarrow}$ BMF	n: 30
N84	BTHF $\overset{2}{\leftrightarrow}$ At $\overset{8}{\leftrightarrow}$ BATS $\overset{8}{\leftrightarrow}$ BLIO $\overset{17}{\leftrightarrow}$ BZD	n: 30
N88	BRST $\overset{3}{\leftrightarrow}$ BBGT $\overset{17}{\leftrightarrow}$ BOSS $\overset{3}{\leftrightarrow}$ BLIS	n: 30

Linie	Fahrtweg	Takt
377	BPWD $\overset{13}{\leftrightarrow}$ BNK $\overset{5}{\leftrightarrow}$ BHER	t: 20, f/a: 20
395	BMDF $\overset{18}{\rightarrow}$ Hö $\overset{14}{\rightarrow}$ BMDF	t: 20, f/a: 20
398	BMDF $\overset{21}{\leftrightarrow}$ E	t: 20, So: –
893	BZEP $\overset{13}{\leftrightarrow}$ BBU $\overset{33}{\leftrightarrow}$ BHH	t: 20, Sa/So: 60
N1	BWRS $\overset{3}{\leftrightarrow}$ S $\overset{4}{\leftrightarrow}$ Gr $\overset{2}{\leftrightarrow}$ Kbo $\overset{1}{\leftrightarrow}$ Pr $\overset{2}{\leftrightarrow}$ Ho $\overset{4}{\leftrightarrow}$ Mo $\overset{2}{\leftrightarrow}$ MB $\overset{3}{\leftrightarrow}$ Kus $\overset{1}{\leftrightarrow}$ BS $\overset{1}{\leftrightarrow}$ Nm $\overset{3}{\leftrightarrow}$ Wt $\overset{3}{\leftrightarrow}$ Kfo $\overset{1}{\leftrightarrow}$ BZOS	n: 15-30, WE: –
N2	Rl $\overset{5}{\leftrightarrow}$ Nd $\overset{2}{\leftrightarrow}$ Th $\overset{1}{\leftrightarrow}$ Kd $\overset{2}{\leftrightarrow}$ So $\overset{3}{\leftrightarrow}$ Bmo $\overset{2}{\leftrightarrow}$ Obi $\overset{2}{\leftrightarrow}$ RP $\overset{9}{\leftrightarrow}$ BZOS $\overset{2}{\leftrightarrow}$ Kfo $\overset{3}{\leftrightarrow}$ Wt $\overset{3}{\leftrightarrow}$ Nm $\overset{1}{\leftrightarrow}$ BS $\overset{1}{\leftrightarrow}$ Kus $\overset{5}{\leftrightarrow}$ BPOP $\overset{2}{\leftrightarrow}$ MH $\overset{3}{\leftrightarrow}$ ULO $\overset{10}{\leftrightarrow}$ BHKM $\overset{2}{\leftrightarrow}$ W $\overset{3}{\leftrightarrow}$ Lu $\overset{1}{\leftrightarrow}$ Sz $\overset{3}{\leftrightarrow}$ EB $\overset{3}{\leftrightarrow}$ BSAL $\overset{3}{\leftrightarrow}$ VIN $\overset{3}{\leftrightarrow}$ BPKW	n: 15-30, WE: –
N3	Wt $\overset{3}{\leftrightarrow}$ Kfo $\overset{3}{\leftrightarrow}$ Sno $\overset{1}{\leftrightarrow}$ Hz $\overset{2}{\leftrightarrow}$ Fpo $\overset{2}{\leftrightarrow}$ BHO $\overset{2}{\leftrightarrow}$ BHEI $\overset{5}{\leftrightarrow}$ Bt $\overset{4}{\leftrightarrow}$ DD $\overset{2}{\leftrightarrow}$ T $\overset{4}{\leftrightarrow}$ Os $\overset{4}{\leftrightarrow}$ K $\overset{2}{\leftrightarrow}$ BMEX	n: 30, WE: –
N5	BHKM $\overset{4}{\leftrightarrow}$ BALX $\overset{2}{\leftrightarrow}$ Si $\overset{2}{\leftrightarrow}$ Sr $\overset{2}{\leftrightarrow}$ WR $\overset{2}{\leftrightarrow}$ Ft $\overset{2}{\leftrightarrow}$ Sa $\overset{2}{\leftrightarrow}$ BFA $\overset{2}{\leftrightarrow}$ Md $\overset{13}{\leftrightarrow}$ BWT $\overset{4}{\leftrightarrow}$ KL $\overset{2}{\leftrightarrow}$ GK $\overset{2}{\leftrightarrow}$ C $\overset{2}{\leftrightarrow}$ Hd $\overset{4}{\leftrightarrow}$ LL $\overset{1}{\leftrightarrow}$ Hö	n: 15-30, WE: –
N6	Tg $\overset{2}{\leftrightarrow}$ Bk $\overset{2}{\leftrightarrow}$ Hh $\overset{4}{\leftrightarrow}$ Scha $\overset{3}{\leftrightarrow}$ Sch $\overset{3}{\leftrightarrow}$ Afr $\overset{1}{\leftrightarrow}$ Rb $\overset{3}{\leftrightarrow}$ Se $\overset{3}{\leftrightarrow}$ Lpo $\overset{1}{\leftrightarrow}$ BWED $\overset{2}{\leftrightarrow}$ Ri $\overset{2}{\leftrightarrow}$ Sk $\overset{2}{\leftrightarrow}$ NA $\overset{2}{\leftrightarrow}$ Ob $\overset{1}{\leftrightarrow}$ BFST $\overset{2}{\leftrightarrow}$ ULO $\overset{1}{\leftrightarrow}$ Mi $\overset{2}{\leftrightarrow}$ Ks $\overset{10-15}{\leftrightarrow}$ Me $\overset{1}{\leftrightarrow}$ PL $\overset{2}{\leftrightarrow}$ Ps $\overset{1}{\leftrightarrow}$ BTHF $\overset{2}{\leftrightarrow}$ At $\overset{2}{\leftrightarrow}$ Ka $\overset{2}{\leftrightarrow}$ Ull $\overset{2}{\leftrightarrow}$ Wl $\overset{2}{\leftrightarrow}$ Mf	n: 30, WE: –

Linie	Fahrtweg	Takt
N26	Se $\overset{7}{\leftrightarrow}$ BBEU $\overset{8}{\leftrightarrow}$ Ha $\overset{5}{\leftrightarrow}$ Nm $\overset{3}{\leftrightarrow}$ Wt $\overset{3}{\leftrightarrow}$ Kfo $\overset{1}{\leftrightarrow}$ BZOS	n: 30
N33	Tg $\overset{3}{\leftrightarrow}$ BTG $\overset{4}{\leftrightarrow}$ Hh $\overset{20}{\leftrightarrow}$ Hs	n: 30
N39	Rm $\overset{2}{\leftrightarrow}$ P	n: 30
N40	Tm $\overset{7}{\leftrightarrow}$ BHBF $\overset{3}{\leftrightarrow}$ NA $\overset{1}{\leftrightarrow}$ BNB $\overset{3}{\leftrightarrow}$ Ro $\overset{1}{\leftrightarrow}$ W $\overset{3}{\leftrightarrow}$ BHKM $\overset{3}{\leftrightarrow}$ BJB $\overset{4}{\leftrightarrow}$ BOSB	n: 30
N42	Th $\overset{5}{\leftrightarrow}$ BHAL $\overset{8}{\leftrightarrow}$ Fpo $\overset{2}{\leftrightarrow}$ Bli $\overset{2}{\leftrightarrow}$ Beo $\overset{7}{\leftrightarrow}$ BJLB $\overset{4}{\leftrightarrow}$ PL $\overset{2-6}{\leftrightarrow}$ Me $\overset{2-6}{\leftrightarrow}$ Ho $\overset{6}{\leftrightarrow}$ Sp $\overset{4}{\leftrightarrow}$ BHKM $\overset{2}{\leftrightarrow}$ W $\overset{2}{\leftrightarrow}$ BALX	n: 30
N50	Tk $\overset{5}{\leftrightarrow}$ Fi $\overset{2}{\leftrightarrow}$ BLI $\overset{3}{\leftrightarrow}$ Md $\overset{36}{\leftrightarrow}$ BPKW $\overset{4}{\leftrightarrow}$ BPHD	n: 30
N52	Olo $\overset{5}{\leftrightarrow}$ BSNH	n: 30
N56	Md $\overset{23}{\rightarrow}$ BHH $\overset{3}{\rightarrow}$ BWAB $\overset{7}{\rightarrow}$ BGSE $\overset{16}{\rightarrow}$ Md	n: 30
N60	BADL $\overset{21}{\leftrightarrow}$ BFLH $\overset{2}{\leftrightarrow}$ SXF	n: 30
N61	BFRH $\overset{12}{\leftrightarrow}$ BRD (nur am WE) $\overset{8}{\leftrightarrow}$ BWIG	n: 30
N65	BHKM $\overset{4}{\leftrightarrow}$ BJB $\overset{1}{\leftrightarrow}$ He $\overset{5}{\leftrightarrow}$ S $\overset{6}{\leftrightarrow}$ BTP $\overset{3}{\leftrightarrow}$ BPWA $\overset{12}{\leftrightarrow}$ BSW $\overset{3}{\leftrightarrow}$ BADL $\overset{4}{\leftrightarrow}$ BSPF	n: 30
N67	BSW $\overset{21}{\leftrightarrow}$ BFRH	n: 30
N68	BADL $\overset{4}{\leftrightarrow}$ BGAS	n: 30
N69	BWT $\overset{4}{\leftrightarrow}$ E $\overset{16}{\leftrightarrow}$ BKPK	n: 15-30

Linie	Fahrtweg	Takt
N90	BWT $\overset{6}{\leftrightarrow}$ BMDF $\overset{15}{\leftrightarrow}$ BKPK	n: 30
N91	BWT $\overset{5}{\leftrightarrow}$ KL	n: 30
N94	Hpo $\overset{3}{\leftrightarrow}$ Rk $\overset{10}{\leftrightarrow}$ BTP $\overset{3}{\leftrightarrow}$ BOK $\overset{1}{\leftrightarrow}$ BRH $\overset{1}{\leftrightarrow}$ BNPL $\overset{4}{\leftrightarrow}$ BLI $\overset{4}{\leftrightarrow}$ Md	n: 30
N95	BWT $\overset{2}{\leftrightarrow}$ BKAD $\overset{5}{\leftrightarrow}$ BMDF	n: 30