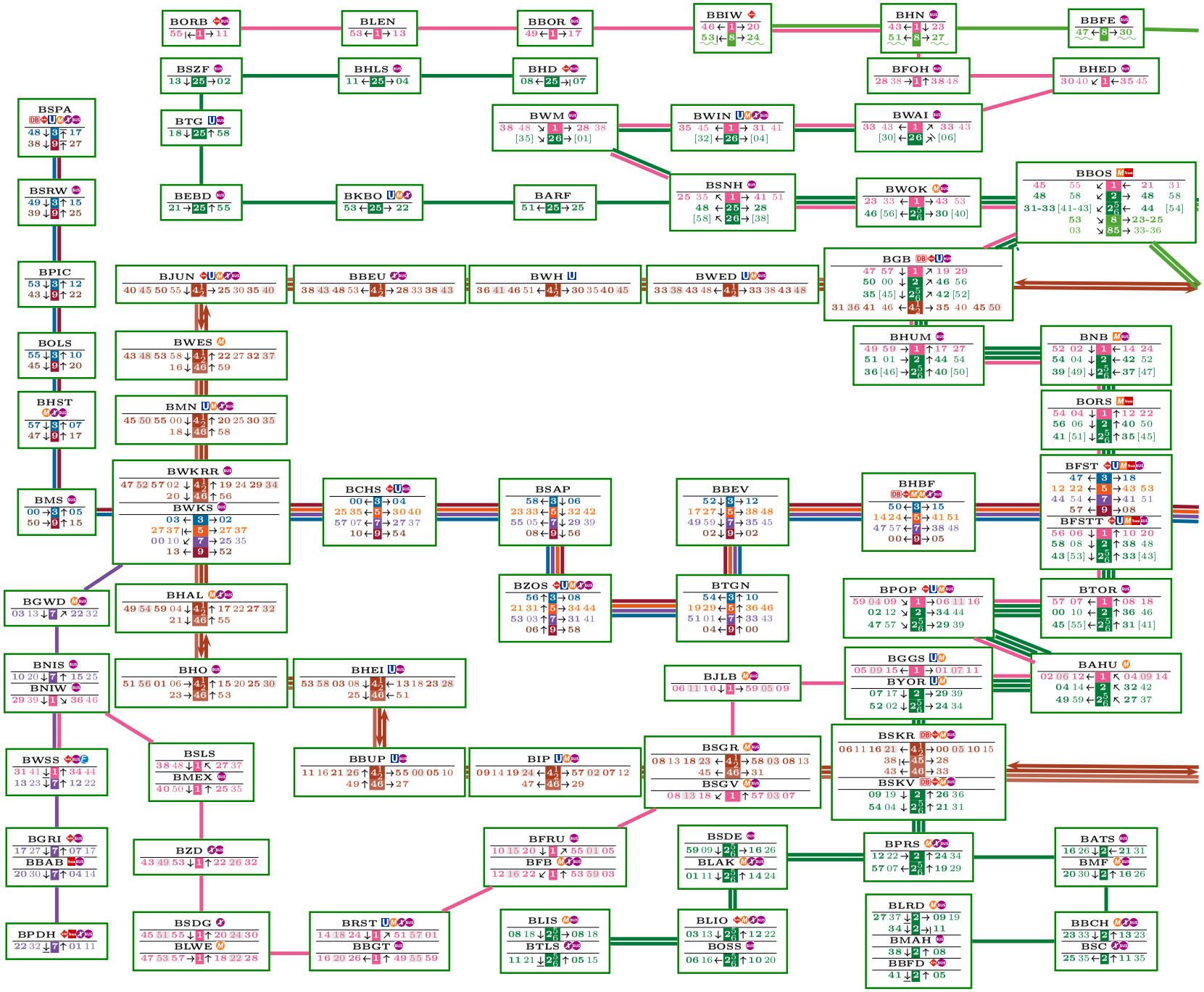
BORB
55 ← 1 → 11
BLEN
53 ← 1 → 13
BBOR
49 ← 1 → 17
BBIW
46 ← 1 → 20
53 ← 8 → 24
BHN
43 ← 1 → 23
51 ← 8 → 27
BBFE
47 ← 8 → 30
BSZF
13 ↓ 25 → 02
BHLS
11 ← 25 → 04
BHD
08 ← 25 → 07
BFOH
28 38 → 1 ↑ 38 48
BHED
30 40 ↙ 1 ← 35 45
BSPA
48 ↓ 3 ↑ 17
38 ↓ 9 ↑ 27
BTG
18 ↓ 25 ↑ 58
BWM
38 48 ↘ 1 → 28 38
[35] ↘ 26 → [01]
BWIN
35 45 ← 1 → 31 41
[32] ← 26 → [04]
BWAI
33 43 ← 1 ↗ 33 43
[30] ← 26 ↗ [06]
BSRW
49 ↓ 3 ↑ 15
39 ↓ 9 ↑ 25
BEBD
21 → 25 ↑ 55
BKBO
53 ← 25 → 22
BARF
51 ← 25 → 25
BSNH
25 35 ↖ 1 → 41 51
48 ← 25 → 28
[58] ↖ 26 → [38]
BWOK
23 33 ← 1 → 43 53
46 [56] ← 2 5/6 → 30 [40]
BBOS
45 55 ↙ 1 ← 21 31
48 58 ↙ 2 → 48 58
31-33 [41-43] ↙ 2 5/6 ← 44 [54]
53 ↘ 8 → 23-25
03 ↘ 85 → 33-36
BPIC
53 ↓ 3 ↑ 12
43 ↓ 9 ↑ 22
BJUN
40 45 50 55 ↓ 4 1/2 → 25 30 35 40
BBEU
38 43 48 53 ← 4 1/2 → 28 33 38 43
BWH
36 41 46 51 ← 4 1/2 → 30 35 40 45
BWED
33 38 43 48 ← 4 1/2 → 33 38 43 48
BGB
47 57 ↓ 1 ↗ 19 29
50 00 ↓ 2 ↗ 46 56
35 [45] ↓ 2 5/6 ↗ 42 [52]
31 36 41 46 ← 4 1/2 → 35 40 45 50
BOLS
55 ↓ 3 ↑ 10
45 ↓ 9 ↑ 20
BWES
43 48 53 58 ↓ 4 1/2 ↑ 22 27 32 37
16 ↓ 46 ↑ 59
BHUM
49 59 → 1 ↑ 17 27
51 01 → 2 ↑ 44 54
36 [46] → 2 5/6 ↑ 40 [50]
BNB
52 02 ↓ 1 ← 14 24
54 04 ↓ 2 ← 42 52
39 [49] ↓ 2 5/6 ← 37 [47]
BHST
57 ↓ 3 ↑ 07
47 ↓ 9 ↑ 17
BMN
45 50 55 00 ↓ 4 1/2 ↑ 20 25 30 35
18 ↓ 46 ↑ 58
BORS
54 04 ↓ 1 ↑ 12 22
56 06 ↓ 2 ↑ 40 50
41 [51] ↓ 2 5/6 ↑ 35 [45]
BWKRR
47 52 57 02 ↓ 4 1/2 ↑ 19 24 29 34
20 ↓ 46 ↑ 56
BWKS
03 ← 3 → 02
27 37 |← 5 → 27 37
00 10 ↙ 7 → 25 35
13 ← 9 → 52
BCHS
00 ← 3 → 04
25 35 ← 5 → 30 40
57 07 ← 7 → 27 37
10 ← 9 → 54
BSAP
58 ← 3 ↓ 06
23 33 ← 5 ↓ 32 42
55 05 ← 7 ↓ 29 39
08 ← 9 ↓ 56
BBEV
52 ↓ 3 → 12
17 27 ↓ 5 → 38 48
49 59 ↓ 7 → 35 45
02 ↓ 9 → 02
BHBF
50 ← 3 → 15
14 24 ← 5 → 41 51
47 57 ← 7 → 38 48
00 ← 9 → 05
BFST
47 ← 3 → 18
12 22 ← 5 → 43 53
44 54 ← 7 → 41 51
57 ← 9 → 08
BFSTT
56 06 ↓ 1 ↑ 10 20
58 08 ↓ 2 ↑ 38 48
43 [53] ↓ 2 5/6 ↑ 33 [43]
BMS
00 → 3 ↑ 05
50 → 9 ↑ 15
BGWD
03 13 ↓ 7 ↗ 22 32
BHAL
49 54 59 04 ↓ 4 1/2 ↑ 17 22 27 32
21 ↓ 46 ↑ 55
BZOS
56 ↑ 3 → 08
21 31 ↑ 5 → 34 44
53 03 ↑ 7 → 31 41
06 ↑ 9 → 58
BTGN
54 ← 3 ↑ 10
19 29 ← 5 ↑ 36 46
51 01 ← 7 ↑ 33 43
04 ← 9 ↑ 00
BPOP
59 04 09 ↘ 1 → 06 11 16
02 12 ↘ 2 → 34 44
47 57 ↘ 2 5/6 → 29 39
BTOR
57 07 ← 1 ↑ 08 18
00 10 ← 2 ↑ 36 46
45 [55] ← 2 5/6 ↑ 31 [41]
BNIS
10 20 ↓ 7 ↑ 15 25
BNIW
29 39 ↓ 1 ↘ 36 46
BHO
51 56 01 06 → 4 1/2 ↑ 15 20 25 30
23 → 46 ↑ 53
BHEI
53 58 03 08 ↓ 4 1/2 ← 13 18 23 28
25 ↓ 46 ← 51
BJLB
06 11 16 ↓ 1 → 59 05 09
BGGS
05 09 15 ← 1 → 01 07 11
BYOR
07 17 ↓ 2 → 29 39
52 02 ↓ 2 5/6 → 24 34
BAHU
02 06 12 ← 1 ↖ 04 09 14
04 14 ← 2 ↖ 32 42
49 59 ← 2 5/6 ↖ 27 37
BWSS
31 41 ↓ 1 → 34 44
13 23 ↓ 7 ↑ 12 22
BSLS
38 48 ↓ 1 ↖ 27 37
BMEX
40 50 ↓ 1 ↑ 25 35
BBUP
11 16 21 26 ↑ 4 1/2 → 55 00 05 10
49 ↑ 46 → 27
BIP
09 14 19 24 ← 4 1/2 → 57 02 07 12
47 ← 46 → 29
BSGR
08 13 18 23 ← 4 1/2 → 58 03 08 13
45 ← 46 → 31
BSGV
08 13 18 ↙ 1 ↑ 57 03 07
BSKR
06 11 16 21 ← 4 1/2 → 00 05 10 15
38 |← 46 → 28
43 ← 46 → 33
BSKV
09 19 ↓ 2 ↑ 26 36
54 04 ↓ 2 5/6 ↑ 21 31
BGRI
17 27 ↓ 7 ↑ 07 17
BBAB
20 30 ↓ 7 ↑ 04 14
BZD
43 49 53 ↓ 1 ↑ 22 26 32
BFRU
10 15 20 ↓ 1 ↗ 55 01 05
BFB
12 16 22 ↙ 1 ↑ 53 59 03
BSDE
59 09 ↓ 2 5/6 → 16 26
BLAK
01 11 ↓ 2 5/6 ↑ 14 24
BPRS
12 22 → 2 ↑ 24 34
57 07 ← 2 5/6 ↑ 19 29
BATS
16 26 ↓ 2 ← 21 31
BMF
20 30 ↓ 2 ↑ 16 26
BPDH
22 32 ↓ 7 ↑ 01 11
BSDG
45 51 55 ↓ 1 ↑ 20 24 30
BLWE
47 53 57 → 1 ↑ 18 22 28
BRST
14 18 24 ↓ 1 ↗ 51 57 01
BBGT
16 20 26 ← 1 ↑ 49 55 59
BLIS
08 18 ↓ 2 5/6 → 08 18
BTLS
11 21 ↓ 2 5/6 ↑ 05 15
BLIO
03 13 ↓ 2 5/6 ↑ 12 22
BOSS
06 16 ← 2 5/6 ↑ 10 20
BLRD
27 37 ↓ 2 → 09 19
34 ↓ 2 →| 11
BMAH
38 ↓ 2 ↑ 08
BBFD
41 ↓ 2 ↑ 05
BBCH
23 33 ↓ 2 ↑ 13 23
BSC
25 35 ← 2 ↑ 11 35

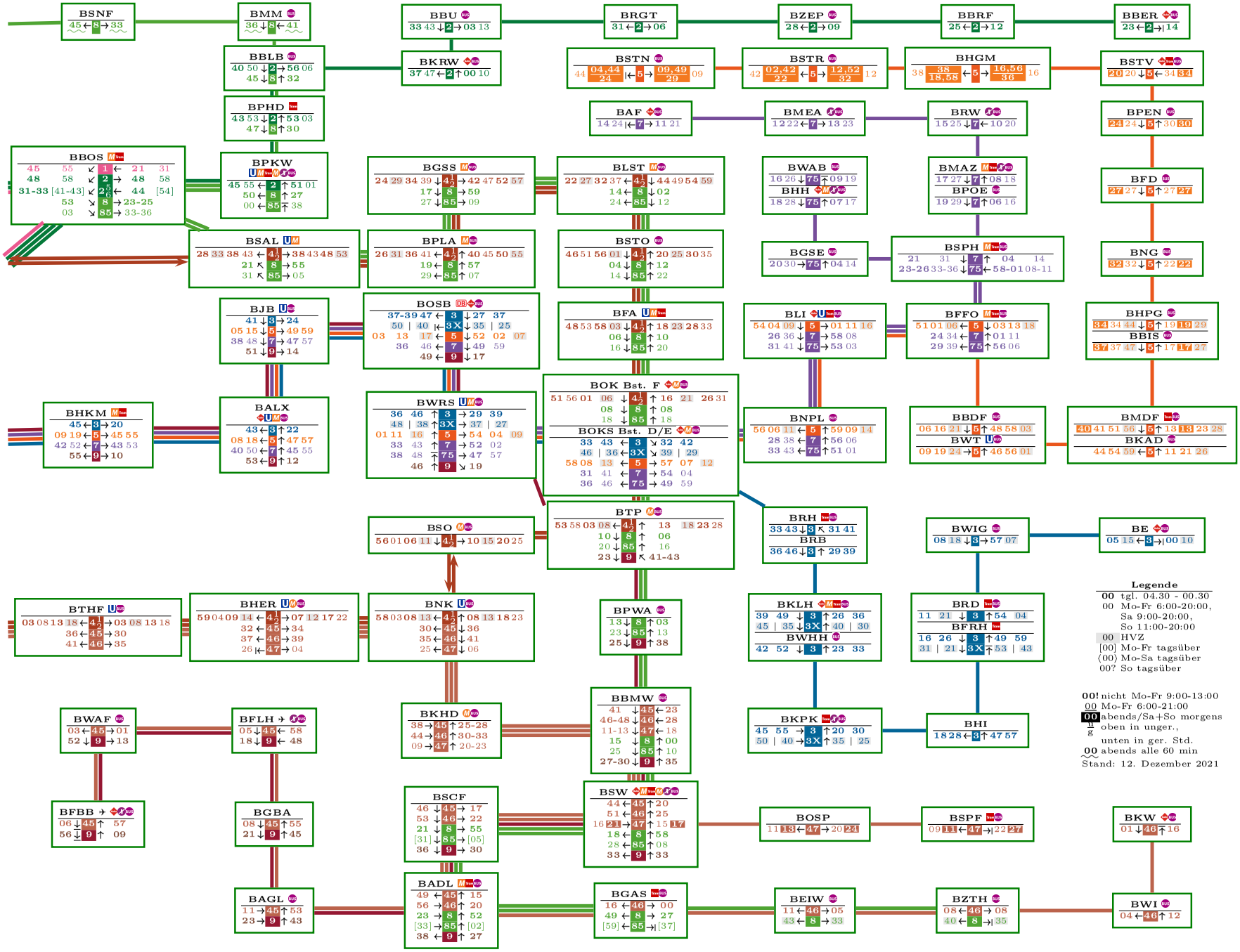
BSNF
BMM
BBU
BRGT
BZEP
BBRF
BBER
BBLB
BKRW
BSTN
BSTR
BHGM
BSTV
BPHD
BAF
BMEA
BRW
BPEN
BBOS
BPKW
BGSS
BLST
BWAB
BHH
BMAZ
BPOE
BFD
BSAL
BPLA
BSTO
BGSE
BSPH
BNG
BJB
BOSB
BFA
BLI
BFFO
BHPG
BBIS
BHKM
BALX
BWRS
BOK Bst. F
BOKS Bst. D/E
BNPL
BBDF
BWT
BMDF
BKAD
BTP
BRH
BRB
BWIG
BE
BSO
BTHF
BHER
BNK
BPWA
BKLH
BWHH
BRD
BFRH
BKPK
BHI
BWAF
BFLH
BKHD
BBMW
BFBB
BGBA
BSCF
BSW
BOSP
BSPF
BKW
BAGL
BADL
BGAS
BEIW
BZTH
BWI
Legende
00 tgl. 04.30 - 00.30
00 Mo-Fr 6:00-20:00, Sa 9:00-20:00, So 11:00-20:00
00 HVZ
[00] Mo-Fr tagsüber
⟨00⟩ Mo-Sa tagsüber
00? So tagsüber
00! nicht Mo-Fr 9:00-13:00
00 Mo-Fr 6:00-21:00
00 abends/Sa+So morgens oben in unger., unten in ger. Std.
00 abends alle 60 min
Stand: 12. Dezember 2021

S1 P (Mo-Fr)												
BWSS	00:14	00:34	00:54			04:14	20	20:34	20:54	21:14	20	23:54
BZD	00:23	00:43	01:03		04:03	04:23		20:43	21:03	21:23		00:03
BSGV	00:37	00:57	01:17	03:57	04:17	04:37		20:57	21:17	21:37		00:17
BNB	00:54	01:14	01:34	04:14	04:34	04:54		21:14	21:34	21:54		00:34
BGB	00:59	01:19	01:38	04:19	04:39	04:59		21:19	21:39	21:59		00:39
BSNH	01:05	01:24		04:25	04:45	05:05		21:25	21:45	22:05		00:45
BFOH	01:18			04:38	04:58	05:18		21:38	21:58	22:18		00:58
BORB				04:55	05:15	05:35		21:55	22:15	22:35		01:15

S1 P (Sa)						
BWSS	00:14	00:34	NV	04:54	20	23:54
BZD	00:23	00:43		05:03		00:03
BSGV	00:37	00:57		05:17		00:17
BNB	00:54	01:14		05:34		00:34
BGB	00:59	01:19		05:39		00:39
BSNH	01:05	01:25		05:45		00:45
BFOH	01:18	01:38		05:58		00:58
BORB	01:35	01:55		06:15		01:15

S1 P (So)										
BWSS	00:14	00:34	NV	06:54	20	20:34	20:54	21:14	20	23:54
BZD	00:23	00:43		07:03		20:43	21:03	21:23		00:03
BSGV	00:37	00:57		07:17		20:57	21:17	21:37		00:17
BNB	00:54	01:14		07:34		21:14	21:34	21:54		00:34
BGB	00:59	01:19		07:39		21:19	21:39	21:59		00:39
BSNH	01:05	01:25		07:45		21:25	21:45	22:05		00:45
BFOH	01:18	01:38		07:58		21:38	21:58	22:18		00:58
BORB	01:35	01:55		08:15		21:55	22:15	22:35		01:15

S1 P (Mo-Fr)								
BORB	00:11	00:31				04:11	20	23:51
BFOH	00:28	00:48			04:08	04:28		00:08
BGB	00:47	01:07		04:07	04:27	04:47		00:27
BPOP	00:59	01:19	03:59	04:19	04:39	04:59		00:39
BSGV	01:12	01:28	04:08	04:28	04:48	05:08		00:48
BZD	01:26		04:22	04:42	05:02	05:22		01:02
BWSS			04:31	04:51	05:11	05:31		01:11

S1 P (Sa)										
BORB	00:11	00:31	00:51	NV	04:11		04:41	05:11	20	23:51
BFOH	00:28	00:48	01:08		04:28		04:58	05:28		00:08
BGB	00:47	01:07	01:27		04:47	05:07	05:23	05:47		00:27
BPOP	01:09	01:19	01:39		04:59	05:19	05:39	05:59		00:39
BSGV	01:18		01:48		05:08	05:28	05:48	06:08		00:48
BZD	01:32		02:02		05:22	05:42	06:02	06:22		01:02
BWSS	01:41		02:11		05:31	05:51	06:11	06:31		01:11

S1 P (So)										
BORB	00:11	00:31	00:51	NV	06:11		06:41	07:11	20	23:51
BFOH	00:28	00:48	01:08		06:28		06:58	07:28		00:08
BGB	00:47	01:07	01:27		06:47	07:07	07:23	07:47		00:27
BPOP	01:09	01:19	01:39		06:59	07:19	07:39	07:59		00:39
BSGV	01:18		01:48		07:08	07:28	07:48	08:08		00:48
BZD	01:32		02:02		07:22	07:42	08:02	08:22		01:02
BWSS	01:41		02:11		07:31	07:51	08:11	08:31		01:11

S1 PI (Mo-Fr)				
BWSS		05:24	20	21:04
BZD	05:13	05:33		21:13
BGB	05:49	06:09		21:49
BWAI	06:03	06:23		22:03
BFOH	06:08	06:28		22:08

S1 PI (abends,So-Do)						
BWSS	21:24					
BZD	21:33	21:53	22:13	20	22:53	23:13
BGB	22:09	22:29	22:48		23:28	23:48
BWAI	22:23	22:43				
BFOH						

S1 PI (abends,Fr-Sa)						
BWSS	21:24					
BZD	21:33	20	22:13	20	22:53	23:13
BGB	22:09		22:49		23:29	23:48
BWAI	22:23		23:03		23:43	
BFOH	22:28		23:08			

S1 PI (Sa)				
BWSS		08:04	20	21:04
BZD	07:53	08:13		21:13
BGB	08:29	08:49		21:49
BWAI	08:43	09:03		22:03
BFOH	08:48	09:08		22:08

S1 PI (So)				
BWSS		09:44	20	21:04
BZD	09:33	09:53		21:13
BGB	10:09	10:29		21:49
BWAI	10:23	10:43		22:03
BFOH	10:28	10:48		22:08

S1 PII (Mo-Fr HVZ)								
BWSS	06:39	20	07:19			14:39		
BZD	06:49		07:29	20	09:29	14:49	20	18:29
BPOP	07:11		07:51		09:51	15:11		18:51

S1 PII (Mo-Fr HVZ)										
BPOP	07:24	20	09:04	09:24	14:44	20	18:04	18:24	20	19:04
BZD	07:46		09:26	09:47	15:06		18:26	18:47		19:27
BWSS				09:56				18:56		19:36

S1 PI (Mo-Fr)						
BFOH				05:38	20	19:58
BWAI		05:03	20	05:43		20:03
BGB		05:17		05:57		20:17
BNB		05:22		06:02		20:22
BPOP	05:09	05:29		06:09		20:29
BZD	05:32	05:52		06:32		20:52
BWSS	05:41	06:01		06:41		21:01

S1 PI (abends, Mo-Do)								
BFOH	20	21:38						
BWAI		21:43						
BGB		21:57		22:37	20	23:17	20	23:57
BNB		22:02	20	22:42		23:22		00:02
BPOP		22:09		22:49		23:29		00:09
BZD		22:32		23:12		23:52		
BWSS				23:21		00:01		

S1 PI (abends,Fr)				
BFOH	20	22:18	22:38		
BWAI		22:23	22:43		
BGB		22:37	22:57	20	23:57
BNB		22:42	23:02		00:02
BPOP		22:49	23:09		00:09
BZD		23:12	23:32		
BWSS		23:21	23:41		

S1 PI (Sa)												
BFOH				08:18	20	19:58	20	22:18	22:38			
BWAI		07:43	20	08:23		20:03		22:23	22:43			
BGB		07:57		08:37		20:17		22:37	22:57	23:17	23:42	00:02
BNB		08:02		08:42		20:22		22:42	23:02	23:22	23:47	00:07
BPOP	07:49	08:09		08:49		20:29		22:49	23:09	23:29	23:54	00:14
BZD	08:12	08:32		09:12		20:52		23:12	23:32	23:52		
BWSS	08:21	08:41		09:21		21:01		23:21	23:41	00:01		

S1 PI (So)														
BFOH				09:58	20	19:58	20	21:38						
BWAI		09:23	20	10:03		20:03		21:43						
BGB		09:37		10:17		20:17		21:57	20	22:37	22:57	23:17	23:42	00:02
BNB		09:42		10:22		20:22		22:02		22:42	23:02	23:22	23:47	00:07
BPOP	09:29	09:49		10:29		20:29		22:09		22:49	23:09	23:29	23:54	00:14
BZD	09:52	10:12		10:52		20:52		22:32		23:12	23:32	23:52		
BWSS	10:01	10:21		11:01		21:01				23:21	23:41	00:01		

S2 W (Mo-Fr)													
BBFD		00:14		00:46			03:58	20	04:38	04:47			
BLRD o		00:21		00:56			04:06		04:46	04:53			
Umsteigen		|		|			|		|				
BLRD	00:09	00:21		00:56			04:09		04:49		05:09	20	23:49
BSKV	00:26	00:36		01:17		04:06	04:26		05:06		05:26		00:06
BPOP	00:34	00:43	00:54			04:14	04:34		05:14		05:34		00:14
BNB	00:42		01:02			04:22	04:42		05:22		05:42		00:22
BGB	00:48		01:06		04:06	04:26	04:46		05:26		05:46		00:26
BBU	01:05		01:25		04:23	04:43	05:03		05:43		06:03		00:43
BBER	01:15				04:34	04:54	05:14		05:54		06:14		00:54

S2 W (Sa)																		
BBFD		00:12	NV	04:09	04:38		05:22	05:35	20	07:15								
BLRD o		00:19		04:15	04:46		05:29	05:41		07:21								
Umsteigen		|		|	|		|	U		U								
BLRD	00:09	00:19		04:16	04:49	05:09	05:29	05:49		07:29	20	19:49	20:09	20	20:49	21:09	20	23:49
BSKV	00:26	00:34		04:38	05:06	05:26	05:46	06:06		07:46		20:06	20:26		21:06	21:26		00:06
BPOP	00:34	00:42		04:46	05:14	05:34	05:54	06:14		07:54		20:14	20:34		21:14	21:34		00:14
BNB	00:52	01:00		04:54	05:22	05:42	06:02	06:22		08:02		20:22	20:42		21:22	21:42		00:22
BGB	00:56	01:04		04:58	05:26	05:46	06:06	06:26		08:06		20:26	20:46		21:26	21:46		00:26
BBU	01:15			05:23	05:43	06:03	06:23	06:43		08:23		20:43	21:03		21:43	22:03		00:43
BBER	01:26			05:34	05:54	06:14	06:34	06:54		08:34		20:54	21:14		21:54	22:14		00:54

S2 W (So)												
BBFD		00:12	NV	06:09	06:42		07:22	07:35	20	08:55		
BLRD o		00:19		06:15	06:49		07:29	07:41		09:01		
Umsteigen		|		|	|		|	U		U		
BLRD	00:09	00:19		06:16	06:49	07:09	07:29	07:49		09:09	20	23:49
BSKV	00:26	00:34		06:38	07:06	07:26	07:46	08:06		09:26		00:06
BPOP	00:34	00:42		06:46	07:14	07:34	07:54	08:14		09:34		00:14
BNB	00:52	01:00		06:54	07:22	07:42	08:02	08:22		09:42		00:22
BGB	00:56	01:04		06:58	07:26	07:46	08:06	08:26		09:46		00:26
BBU	01:15			07:23	07:43	08:03	08:23	08:43		10:03		00:43
BBER	01:26			07:34	07:54	08:14	08:34	08:54		10:14		00:54

S2 W (Mo-Fr)													(Fr)	
BBER	00:03	00:23	00:43				04:03	20	22:43	23:03	23:23	23:43	23:23	23:43
BGB	00:30	00:50	01:10				04:30		23:10	23:30	23:50	00:10	23:50	00:10
BNB	00:34	00:54	01:14				04:34		23:14	23:34	23:54	00:14	23:54	00:14
BPOP	00:42	01:02	01:21		04:14		04:42		23:22	23:42	00:02	00:22	00:02	00:22
BSKV	00:49	01:09		04:01	04:21		04:49		23:29	23:49	00:09	00:29	00:09	00:29
BLRD o	01:05			04:17	04:37		05:07		23:47	00:07	00:30	00:45	00:27	00:54
Umsteigen	|			|	|		U		U		|	|	|	|
BLRD	01:06			04:18	04:38	04:55	05:14		23:54		00:31	00:46	00:28	00:55
BBFD	01:13			04:25	04:45	05:02	05:21		00:01		00:37	00:53	00:34	01:01

S2 W (Sa-So)																		
BBER	00:03	00:33	NV	03:33	04:03			04:33	05:03	20	06:03	20	06:43	20	22:43	23:03	23:23	23:43
BGB	00:37	01:00		04:07	04:30	04:42		05:10	05:30		06:30		07:10		23:10	23:30	23:50	00:10
BNB	00:42	01:04		04:12	04:34	04:46		05:14	05:34		06:34		07:14		23:14	23:34	23:54	00:14
BPOP	00:54	01:31		04:24	04:42	04:54		05:22	05:42		06:42		07:22		23:22	23:42	00:02	00:22
BSKV	01:09	01:39		04:42	04:49	05:01		05:29	05:49		06:49		07:29		23:29	23:49	00:09	00:29
BLRD o	01:24	01:54		04:57	05:07	05:17		05:47	06:07		07:07		07:47		23:47	00:07	00:27	00:47
Umsteigen	|	|		|	|	|		U	U		U		U		U		|	|
BLRD	01:25	01:55		04:58		05:18	05:44	06:04	06:24		07:24		07:54		23:54		00:28	00:55
BBFD	01:31	02:01		05:04		05:29	05:51	06:11	06:31		07:31		08:01		00:01		00:34	01:01

(So)										
BBER	05:33	06:03			06:33	07:03	20	07:43	20	08:23
BGB	06:07	06:30	06:42		07:10	07:30		08:10		08:50
BNB	06:12	06:34	06:46		07:14	07:34		08:14		08:54
BPOP	06:24	06:42	06:54		07:22	07:42		08:22		09:02
BSKV	06:42	06:49	07:01		07:29	07:49		08:29		09:09
BLRD o	06:57	07:07	07:17		07:47	08:07		08:47		09:27
Umsteigen	|	|	|		U	U		U		U
BLRD	06:58		07:18	07:44	08:04	08:24		09:04		09:34
BBFD	07:04		07:29	07:51	08:11	08:31		09:11		09:41

S2 WI (Mo-Fr)															
BBFD				05:05	20	21:05	21:25	21:45	22:05	22:25	22:45	20	23:25	23:45
BLRD o				05:11		21:11	21:31	21:51	22:11	22:31	22:51		23:31	23:51
Umsteigen				U		U	U	U	U	U				
BLRD				05:19		21:19	21:39	21:59	22:19	22:39				
BMF			05:06	05:26		21:26	21:46	22:06	22:26	22:45				
BSKV			05:16	05:36		21:36	21:56	22:16	22:34					
BAHU		05:02	05:22	05:42		21:42	22:02	22:22						
BPOP	04:44	05:04	05:24	05:44		21:44	22:04	22:23						
BGB	04:56	05:16	05:36	05:56		21:56	22:16							
BBU	05:13	05:33	05:53	06:13		22:13								

(Fr)							
BBFD	21:25	20	22:05	22:25	22:45	23:05	23:25
BLRD o	21:31		22:11	22:31	22:51	23:11	23:31
Umsteigen	U		U	U	U	U	U
BLRD	21:39		22:19	22:39	22:59	23:19	23:39
BMF	21:46		22:26	22:46	23:06	23:26	23:45
BSKV	21:56		22:36	22:56	23:16	23:34	
BAHU	22:02		22:42	23:02	23:22		
BPOP	22:04		22:44	23:04	23:23		
BGB	22:16		22:56	23:16			
BBU	22:33		23:13				

S2 WI (Sa)										
BBFD			07:45	20	22:05	22:25	22:45	23:05	23:25	23:45
BLRD o			07:51		22:11	22:31	22:51	23:11	23:31	23:51
Umsteigen			U		U	U	U	U	U	
BLRD			07:59		22:19	22:39	22:59	23:19	23:39	
BMF		07:46	08:06		22:26	22:46	23:06	23:26	23:45	
BSKV		07:56	08:16		22:36	22:56	23:16	23:34		
BAHU	07:42	08:02	08:22		22:42	23:02	23:22			
BPOP	07:44	08:04	08:24		22:44	23:04	23:23			
BGB	07:56	08:16	08:36		22:56	23:16				
BBU	08:13	08:33	08:53		23:13					

S2 WI (So)										
BBFD		09:25	20	21:05	21:25	21:45	22:05	22:25	20	23:45
BLRD o		09:31		21:11	21:31	21:51	22:11	22:31		23:51
Umsteigen		U		U	U	U	U	U		
BLRD		09:39		21:19	21:39	21:59	22:19	22:39		
BMF	09:26	09:46		21:26	21:46	22:06	22:26	22:45		
BSKV	09:36	09:56		21:36	21:56	22:16	22:34			
BAHU	09:42	10:02		21:42	22:02	22:22				
BPOP	09:44	10:04		21:44	22:04	22:23				
BGB	09:56	10:16		21:56	22:16					
BBU	10:13	10:33		22:13						

S2 WI (Mo-Fr)							(Fr)			
BBU	04:23		05:03	20	21:43	21:59	22:03	20	22:43	22:59
BGB	04:40		05:20		22:00	22:17	22:20		23:00	23:17
BPOP	04:52		05:32		22:12		22:32		23:12	
BSKR	04:59	05:19	05:39		22:19		22:39		23:19	
BLRD	05:17	05:37	05:57		22:37		22:57		23:37	

S2 WI (Sa)							
BBU				08:03	20	22:43	22:59
BGB			08:00	08:20		23:00	23:17
BPOP		07:52	08:12	08:32		23:12	
BSKR	07:39	07:59	08:19	08:39		23:19	
BLRD	07:57	08:17	08:37	08:57		23:37	

S2 WI (So)								
BBU					10:03	20	21:43	21:59
BGB			09:40	20	10:20		22:00	22:17
BPOP		09:32	09:52		10:32		22:12	
BSKR	09:19	09:39	09:59		10:39		22:19	
BLRD	09:37	09:57	10:17		10:57		22:37	

S25 V (Mo-Fr)								
BTLS	00:05	00:25	00:45			04:05	20	23:45
BAHU	00:27	00:47	01:07		04:07	04:27		00:07
BPOP	00:29	00:49	01:09		04:09	04:29		00:09
BNB	00:37	00:57			04:17	04:37		00:17
BSNH	00:48	01:08			04:28	04:48		00:28
BTG	00:58	01:17		04:25	04:38	04:58		00:38
BHLS	01:04			04:34	04:44	05:04		00:44
BHD	01:07			04:37	04:47	05:07		00:47

S25 V (Sa)							
BTLS	00:05	00:25	00:44	NV	04:45	20	23:45
BAHU	00:27	00:47	01:07		05:07		00:07
BPOP	00:29	00:49	01:09		05:09		00:09
BNB	00:37	00:57			05:17		00:17
BSNH	00:48	01:08			05:28		00:28
BTG	00:58	01:18			05:38		00:38
BHLS	01:04	01:24			05:44		00:44
BHD	01:07	01:27			05:47		00:47

S25 V (So)								
BTLS	00:05	00:25	00:44	NV		06:25	20	23:45
BAHU	00:27	00:47	01:07			06:47		00:07
BPOP	00:29	00:49	01:09		06:39	06:49		00:09
BNB	00:37	00:57			06:47	06:57		00:17
BSNH	00:48	01:08			07:01	07:08		00:28
BTG	00:58	01:18				07:18		00:38
BHLS	01:04	01:24				07:24		00:44
BHD	01:07	01:27				07:27		00:47

S25 V (Mo-Fr)										Fr
BHD	00:08	00:28	00:38				04:08	20	23:48	23:48
BHLS	00:11	00:31	00:41				04:11		23:51	23:51
BTG	00:18	00:38				04:08	04:18		23:58	23:58
BSNH	00:28	00:48				04:18	04:28		00:08	00:08
BNB	00:39	00:59			04:19	04:29	04:39		00:19	00:19
BPOP	00:47	01:07			04:27	04:36	04:47		00:27	00:27
BLIS	01:08	01:27		04:37	04:48		05:08		00:48	00:47
BTLS	01:11			04:41	04:51		05:11		00:51	00:51

S25 V (Sa)										
BHD	00:08	20	00:48	NV		05:08	20	23:28	23:48
BHLS	00:11		00:51			05:11		23:31	23:51
BTG	00:18		00:58			05:18		23:38	23:58
BSNH	00:28		01:08			05:28		23:48	00:08
BNB	00:39		01:19			05:39		23:59	00:19
BPOP	00:47		01:27		05:27	05:47		00:07	00:27
BLIS	01:08		01:48		05:48	06:08		00:28	00:47
BTLS	01:11		01:51		05:51	06:11		00:31	00:51

S25 V (So)									
BHD	00:08	20	00:48	NV		07:08	20	23:48
BHLS	00:11		00:51			07:11		23:51
BTG	00:18		00:58			07:18		23:58
BSNH	00:28		01:08		07:08	07:28		00:08
BNB	00:39		01:19		07:19	07:39		00:19
BPOP	00:47		01:27		07:27	07:47		00:27
BLIS	01:08		01:48		07:48	08:08		00:48
BTLS	01:11		01:51		07:51	08:11		00:51

S26 VI (Mo-Fr)											
BTLS			05:35	20	19:35	19:55	20	20:35	20	21:15
BLIS		05:18	05:38		19:38	19:58		20:38		21:18
BPOP		05:39	05:59		19:59	20:19		20:59		
BNB	05:27	05:47	06:07		20:07	20:27				
BWAI	05:46	06:06	06:26		20:26					

S26 VI (Sa)					
BTLS	08:15	20	19:55	20	20:35
BLIS	08:18		19:58		20:38
BPOP	08:39		20:19		

S26 VI (So)					
BTLS	11:15	20	19:55	20	20:35
BLIS	11:18		19:58		20:38
BPOP	11:39		20:19		

S26 VI (Mo-Fr)							
BWAI				05:50	20	20:10	20:30
BNB		05:09	20	06:09		20:29	20:49
BPOP		05:17		06:17		20:37	
BLIS	05:18	05:38		06:38		20:58	
BTLS	05:21	05:41		06:41		21:01	

S26 VI (Sa)						
BWAI						
BNB			08:09	08:29		
BPOP			08:17	08:37	20	19:57
BLIS	07:58	20	08:38	08:58		20:18
BTLS	08:01		08:41	09:01		20:21

S26 VI (So)						
BWAI						
BNB			11:09	11:29		
BPOP			11:17	11:37	20	19:57
BLIS	10:58	20	11:38	11:58		20:18
BTLS	11:01		11:41	12:01		20:21

S3 B (Mo-Fr)

								(abends)		
BE	00:05	00:25		03:45	04:05	20	22:45	23:05	23:25	23:45
BKPK	00:20	00:40	03:40	04:00	04:20		23:00	23:20	23:40	00:00
BOSB	00:39	00:57	03:59	04:19	04:39		23:19	23:39	23:59	00:19
BCHS	01:00		04:20	04:40	05:00		23:40	00:00	00:20	00:40
BOLS	01:09		|	|	05:10		23:50	|	|	00:49
BSPA			|	|	05:17		23:57	|	|	
BGWD			04:25	04:45				00:05	00:25	

S3 B (Sa)

BE	00:05	00:25	NV	04:25	20	06:05	20	22:45
BKPK	00:20	00:40		04:40		06:20		23:00
BOSB	00:39	00:57		04:59		06:39		23:19
BCHS	01:00			05:20		07:00		23:40
BOLS	01:09					07:10		23:50
BSPA						07:17		23:57

S3 B (So)

BE	00:05	00:25	NV	06:25	20	08:05	20	22:45
BKPK	00:20	00:40		06:40		08:20		23:00
BOSB	00:39	00:57		06:59		08:39		23:19
BCHS	01:00			07:20		09:00		23:40
BOLS	01:09					09:10		23:50
BSPA						09:17		23:57

S3 BII (Schultage)

BFRH	06:11	20	08:11	20	08:51	14:21	20	18:21
BOSB	06:30		08:30		09:10	14:40		18:40
BCHS			08:52		09:32			

S3 B (Mo-Fr)

BGWD	00:18	00:38		03:58	20	04:58			
BSPA	|	|		|		|	05:08	20	23:48
BWKS	00:22	00:42		04:02		05:02	05:22		00:02
BCHS	00:24	00:44		04:04		05:04	05:24		00:04
BOSB	00:47	01:07	04:07	04:27		05:27	05:47		00:27
BKPK	01:05	01:24	04:25	04:45		05:45	06:05		00:45
BE	01:20		04:40	05:00		06:00	06:20		01:00

S3 B (Sa)

BGWD	00:18	00:38		04:58	05:18				
BSPA	|	|		|	|		07:08	20	23:48
BWKS	00:22	00:42		05:02	05:22		07:22		00:02
BCHS	00:24	00:44		05:04	05:24	20	07:24		00:04
BOSB	00:47	01:07	NV	05:27	05:47		07:47		00:27
BKPK	01:05	01:25		05:45	06:05		08:05		00:45
BE	01:20	01:40		06:00	06:20		08:20		01:00

S3 B (So)

BGWD	00:18	00:38		06:58	07:18				
BSPA	|	|		|	|		09:08	20	23:48
BWKS	00:22	00:42		07:02	07:22		09:22		00:02
BCHS	00:24	00:44		07:04	07:24	20	09:24		00:04
BOSB	00:47	01:07	NV	07:27	07:47		09:47		00:27
BKPK	01:05	01:25		07:45	08:05		10:05		00:45
BE	01:20	01:40		08:00	08:20		10:20		01:00

S3 BII (Schultage)

BOSB	06:15	20	08:15	13:45	20	17:45	18:05	18:25
BFRH	06:33		08:33	14:03		18:03	18:24	18:44
BE							18:35	18:55

S3 BI (Mo-Fr)

BE	04:35	20	08:55		14:15	20	20:15			23:35
BFRH	04:46		09:06	20	14:26		20:26	20	23:26	23:46
BOSB	05:07		09:27		14:47		20:47		23:47	00:07

S3 BI (Sa)

BE	06:35	20	07:35		
BFRH	06:46		07:46	20	23:26
BOSB	07:07		08:07		23:47

S3 BI (So)

BE	08:35	20	09:35			23:35
BFRH	08:46		09:46	20	23:26	23:46
BOSB	09:07		10:07		23:47	00:07

S3 BI (Mo-Fr)

BOSB	04:57	20	08:17	20	13:37	20	19:37	20	22:57	20	23:57
BFRH	05:19		08:39		13:59		19:59		23:19		00:19
BE	05:30		08:50		14:10		20:10		23:30		00:30

S3 BI (Sa)

BOSB	07:17	20	22:57	20	23:57
BFRH	07:39		23:19		00:19
BE			23:30		00:30

S3 BI (So)

BOSB	09:17	20	22:57	20	23:57
BFRH	09:39		23:19		00:19
BE			23:30		00:30

S41 A (Mo-Fr)

BSKR	00:06	00:16	00:26	00:36	00:46	00:56	01:09	01:16							04:16	10	23:56
BBUP	00:11	00:21	00:31	00:41	00:51	01:01	01:14	01:21						04:11	04:21		00:01
BCHS	|	|	|	|	|	|	|	01:30						|	|		|
BWES	00:22	00:32	00:42	00:52	01:03	01:12	01:25					04:02	10	04:22	04:32		00:12
BGB	00:35	00:45	00:55	01:05	01:16		01:38		03:45		04:05	04:15		04:35	04:45		00:25
BGSS	00:42	00:52	01:02	01:12	01:22				03:52	04:02	04:12	04:22		04:42	04:52		00:32
BOK	00:54	01:01	01:14	01:20					04:01	04:11	04:21	04:31		04:51	05:01		00:41
BSKR	01:08	01:15	01:28						04:15	04:25	04:35	04:45		05:05	05:15		00:55

S41 A (Sa)

BSKR	00:06	00:16	NV	05:16	10	23:56
BBUP	00:11	00:21		05:21		00:01
BCHS	|	|		|		|
BWES	00:22	00:32		05:32		00:12
BGB	00:35	00:45		05:45		00:25
BGSS	00:42	00:52		05:52		00:32
BOK	00:51	01:01		06:01		00:41
BSKR	01:05	01:15		06:15		00:55

S41 A (So)

BSKR	00:06	00:16	NV	06:06	10	23:56
BBUP	00:11	00:21		06:11		00:01
BCHS	|	|		|		|
BWES	00:22	00:32		06:22		00:12
BGB	00:35	00:45		06:35		00:25
BGSS	00:42	00:52		06:42		00:32
BOK	00:51	01:01		06:51		00:41
BSKR	01:05	01:15		07:05		00:55

S42 R (Mo-Fr)

BSKR	00:00	10	00:20	00:30	10	00:50	01:00	01:10	01:20						04:00	10	23:50
BHER	00:07		00:27	00:37		00:57	01:07	01:17	01:26					03:57	04:07		23:57
BOK	00:16		00:36	00:46		01:06	01:16	01:26					03:56	04:06	04:16		00:06
BGSS	00:24		00:44	00:54		01:14	01:24	01:34				03:54	04:04	04:14	04:24		00:14
BGB	00:31		00:51	01:01		01:21	01:30					04:01	04:11	04:21	04:31		00:21
BWES	00:43		01:03	01:13		01:33					04:03	04:13	04:23	04:33	04:43		00:33
BCHS	|		|	|						03:55	|	|	|	|	|		|
BBUP	00:55		01:15	01:24						04:05	04:15	04:25	04:35	04:45	04:55		00:45
BSKR	01:00		01:20							04:10	04:20	04:30	04:40	04:50	05:00		00:50

S42 R (Sa)

BSKR	00:00	00:10	NV	05:10	10	23:50
BHER	00:07	00:17		05:17		23:57
BOK	00:16	00:26		05:26		00:06
BGSS	00:24	00:34		05:34		00:14
BGB	00:31	00:41		05:41		00:21
BWES	00:43	00:53		05:53		00:33
BCHS	|	|		|		|
BBUP	00:55	01:05		06:05		00:45
BSKR	01:00	01:10		06:10		00:50

S42 R (So)

BSKR	00:00	00:10	NV	06:40	10	23:50
BHER	00:07	00:17		06:47		23:57
BOK	00:16	00:26		06:56		00:06
BGSS	00:24	00:34		07:04		00:14
BGB	00:31	00:41		07:11		00:21
BWES	00:43	00:53		07:23		00:33
BCHS	|	|		|		|
BBUP	00:55	01:05		07:35		00:45
BSKR	01:00	01:10		07:40		00:50

S41 AI (Mo-Fr)

																					(Fr)		
BSKR				05:21	10	09:31	10	09:51	10	10:31	20	13:11	10	19:41	10	20:01	20:11	20:21	20:31	20:41	21:01	20:11	20:21	20:31
BBUP		05:06	10	05:26		09:36		09:56		10:36		13:16		19:46		20:06	20:16	20:26	20:36	20:46	21:06	20:16	20:26	20:36
BWES	05:07	05:17		05:37		09:47		10:07		10:47		13:27		19:57		20:17	20:27	20:37	20:47	20:57	21:17	20:27	20:37	20:47
BGSS	05:27	05:37		05:57		10:07		10:27		11:07		13:47		20:17		20:37	20:47	20:57	21:06			20:47	20:57	21:07
BTP	05:38	05:48		06:08		10:18		10:38		11:18		13:58		20:28		20:48	20:58	21:08				20:57	21:08	21:18
BHER	05:44	05:54		06:14		10:24		10:44	20	11:24		14:04		20:34		20:54	21:04	21:14					21:14	21:24
BTHF	05:48	05:58		06:18		10:28		10:48		11:28		14:08		20:38		20:58	21:08						21:18	21:28
BSKR	05:50	06:00		06:20		10:30		10:50		11:30		14:10		20:40		21:00								

S41 AI (Sa)

BSKR		12:11	20	18:51	19:11	19:31
BBUP	11:56	12:16		18:56	19:16	19:36
BWES	12:07	12:27		19:07	19:27	19:47
BGSS	12:27	12:47		19:27	19:47	
BTP	12:38	12:58		19:38	19:58	
BHER	12:44	13:04		19:44	20:04	
BTHF	12:48	13:08		19:48	20:08	
BSKR	12:50	13:10		19:50		

S41 AI (So)

BSKR		12:11	20	19:11	20	20:11
BBUP	11:56	12:16		19:16		20:16
BWES	12:07	12:27		19:27		20:27
BGSS	12:27	12:47		19:47		
BTP	12:38	12:58		19:58		
BHER	12:44	13:04		20:04		
BTHF	12:48	13:08		20:08		
BSKR	12:50	13:10		20:10		

S42 RI (Mo-Fr)

BSKR						05:45		06:05	10	10:15	20	13:15	20	13:55		14:15	10	20:15	20:25	20:35
BTHF			05:18		05:38	05:48	10	06:08		10:18		13:18		13:58	10	14:18		20:18	20:28	20:38
BHER			05:22	10	05:42	05:52		06:12		10:22		13:22		14:02		14:22		20:22	20:32	20:42
BTP			05:28		05:48	05:58		06:18		10:28		13:28	10	14:08		14:28		20:28	20:38	20:48
BGSS		05:29	05:39		05:59	06:09		06:29		10:39		13:39		14:19		14:39		20:39	20:49	20:59
BWES	05:28	05:48	05:58		06:18	06:28		06:48		10:58		13:58		14:38		14:58		20:58	21:08	21:18
BBUP	05:40	06:00	06:10		06:30	06:40		07:00		11:10		14:10		14:50		15:10		21:10	21:19	21:29
BSKR	05:45	06:05	06:15		06:35	06:45		07:05		11:15		14:15		14:55		15:15		21:15		

S42 RI (Sa-So)

BSKR				12:35	20	19:35
BTHF			12:18	12:38		19:38
BHER			12:22	12:42		19:42
BTP			12:28	12:48		19:48
BGSS			12:39	12:59		19:59
BWES	12:18	20	12:58	13:18		20:18
BBUP	12:30		13:10	13:30		20:30
BSKR	12:35		13:15	13:35		20:35

S45 U (Mo-Fr)

								Fr
BGAS			04:51					
BFBB ✈			|	04:57	20	23:37	23:57	23:57
BFHS ✈			|	05:05		23:45	00:05	00:05
BSW	04:22	04:42	05:00	05:20		00:00	00:20	00:20
BHER	04:32	04:52	05:12	05:32		00:12	00:32	00:31
BTHF	04:36	04:56	05:16	05:36		00:16	00:36	
BSKR	04:38	04:58	05:18	05:38		00:18	00:38	
BCHS							00:53	

S45 U (Sa)

BGAS			04:51					
BFBB ✈			|		05:17	20	23:37	23:57
BFHS ✈			|		05:25		23:45	00:05
BSW	04:33	04:53	05:00	05:22	05:40		00:00	00:20
BHER	04:42	05:02	05:12	05:32	05:52		00:12	00:31
BTHF	04:46	05:06	05:15	05:36	05:56		00:16	
BSKR				05:38	05:58		00:18	
BCHS								

S45 U (So)

BGAS		06:44					
BFBB ✈		|			07:17	20	23:57
BFHS ✈		|			07:25		00:05
BSW	06:33	06:53	07:02	07:22	07:40		00:20
BHER	06:42	07:02	07:12	07:32	07:52		00:32
BTHF	06:46	07:06	07:16	07:36	07:56		00:36
BSKR			07:18	07:38	07:58		00:38
BCHS							00:53

S45 U (Mo-Fr)

BSKR	00:08	00:28		04:48	20	23:08	23:28	23:48
BTHF	00:10	00:30		04:50		23:10	23:30	23:50
BHER	00:14	00:34		04:54		23:14	23:34	23:54
BSW	00:23	00:43	04:44	05:04		23:24	23:44	00:03
BFLH ✈			04:58	05:18		23:38	|	
BFBB ✈			05:06	05:26		23:46	|	
BGAS							23:52	

S45 U (Sa)

BSKR	00:08	00:28				05:48	20	23:08	23:28	23:48
BTHF	00:10	00:30		04:50	20	05:50		23:10	23:30	23:50
BHER	00:14	00:34	04:28	04:54		05:54		23:14	23:34	23:54
BSW	00:23	00:43	04:39	05:04		06:04		23:24	23:44	00:03
BFLH ✈			04:53	05:18		06:18		23:38	|	
BFBB ✈			05:01	05:26		06:26		23:46	|	
BGAS									23:52	

S45 U (So)

BSKR	00:08	00:28				07:28	20	23:08	23:28	23:48
BTHF	00:10	00:30		06:50	20	07:30		23:10	23:30	23:50
BHER	00:14	00:34	06:37	06:54		07:34		23:14	23:34	23:54
BSW	00:23	00:43	06:46	07:04		07:44		23:24	23:44	00:03
BFLH ✈			07:01	07:18		07:58		23:38	|	
BFBB ✈			07:59	07:26		08:06		23:46	|	
BGAS									23:52	

S46 D (Mo-Fr)

													Fr	(D → AI)	
BKW	00:01	00:21	00:41	01:01		04:01	20	21:01	21:21	21:41	20	23:41	21:21		
BGAS	00:16	00:36	00:56	01:16	03:56	04:16		21:16	21:36	21:56		23:56	21:36	04:53	05:13
BTHF	00:39	00:58	01:18		04:21	04:41		21:41	22:01	22:21		00:19	22:01	05:18	05:38
BSKR	00:41				04:23	04:43		21:43	22:03	22:23		00:21	22:03	05:20	05:40
BWES					04:39	04:59		21:59	22:19	22:39		00:37	22:19		

S46 D (Sa)

BKW	00:01	00:21	NV	04:41	05:01	20	11:21	20	19:21	20	23:41
BGAS	00:16	00:36		04:56	05:16		11:56		19:36		23:56
BTHF	00:38	00:59		05:19	05:39		11:59		19:59		00:19
BSKR		01:01		05:21	05:41		12:01		20:01		00:21
BWES					05:57		12:17		20:17		00:37

S46 D (So)

BKW	00:01	00:21	NV	06:21	20	11:21	20	19:21	20	23:41
BGAS	00:16	00:36		06:36		11:36		19:36		23:56
BTHF	00:38	00:59		06:59		11:59		19:59		00:19
BSKR		01:01		07:01		12:01		20:01		00:21
BWES				07:17		12:17		20:17		00:37

S46 D (Mo-Fr)

														(Fr)				(RI → D)			
BWES	00:16	00:36			04:36	20	20:16	20:36	20:56	21:16	21:36	20	23:36	23:56	20:36	20:56	21:17	23:56				
BSKR	00:33	00:53			04:53		20:33	20:53	21:13	21:33	21:53		23:53	00:13	20:53	21:13	21:33	00:13	10:45	11:05	20:45	21:05
BTHF	00:35	00:55	03:55	20	04:55		20:35	20:55	21:15	21:35	21:55		23:55	00:15	20:55	21:15	21:35	00:15	10:48	11:08	20:48	21:08
BGAS	01:00	01:19	04:20		05:20		21:00	21:20	21:40	22:00	22:20		00:20	00:40	21:20	21:40	22:00	00:40	11:10	11:30	21:10	21:30
BKW	01:16		04:36		05:36		21:16	21:36	21:56	22:16	22:36		00:36	00:56	21:36	21:56	22:16	00:58				

S46 D (Sa)

BWES	00:16	00:36							05:58	20	11:58		19:58	20	23:38	23:58
BSKR	00:33	00:57	NV	04:27	04:57	05:15	05:35		06:15		12:15		20:15		23:55	00:15
BTHF	00:35	01:00		04:30	05:00	05:17	05:37	05:57	06:17		12:17	20	20:17		23:57	00:17
BGAS	01:00	01:22		05:00	05:22	05:40	06:00	06:20	06:40		12:40		20:40		00:20	00:40
BKW	01:16	01:38		05:16	05:38	05:56	06:16	06:36	06:56		12:56		20:56		00:36	00:57

S46 D (So)

BWES	00:18	00:36					07:18	20	11:58		19:58	20	23:58
BSKR	00:35	00:57	NV	06:27	06:55		07:35		12:15		20:15		00:15
BTHF	00:37	01:00		06:30	06:57	20	07:37		12:17	20	20:17		00:17
BGAS	01:00	01:22		07:00	07:20		08:00		12:40		20:40		00:40
BKW	01:16	01:38		07:16	07:36		08:16		12:56		20:56		00:56

S47 K (Mo-Fr)

	morgens												abends		
BSPF	00:11	20	01:11	04:06	04:29	20	05:09	05:29		05:49	20	20:49	21:11	20	23:51
BSW	00:17		01:17	04:12	04:35		05:15	05:35	05:35	05:55		20:55	21:17		23:57
BHER					04:46		05:26		05:46	06:06		21:06			

S47 K (Sa)

BSPF	05:11	20	06:31	06:49	20	20:49
BSW	05:17		06:37	06:55		20:55
BHER				07:06		21:06

S47 K (So)

BSPF	07:11	20	08:31	08:49	20	20:49
BSW	07:17		08:37	08:55		20:55
BHER				09:06		21:06

S47 K (Mo-Fr)

	morgens									abends		
BHER						05:04	20	21:04				
BSW	00:01	20	01:21	04:16	20	05:16		21:16	21:36	22:01	20	23:41
BSPF	00:07		01:27	04:22		05:22		21:22	21:42	22:07		23:47

S47 K (Sa)

BHER							07:24	20	21:04	
BSW	04:52	05:21	20	06:21	06:36	20	07:36		21:16	21:36
BSPF	04:58	05:27		06:27	06:42		07:42		21:22	21:42

S47 K (So)

BHER						09:24	20	21:04	
BSW	07:21	20	08:21	08:36	20	09:36		21:16	21:36
BSPF	07:27		08:27	08:42		09:42		21:22	21:42

S5 E (Mo-Fr)

BSTN						03:49	20	20:29
BSTV					03:40	04:00		20:40
BMDF	00:01	00:21	00:41		04:01	04:21		21:01
BLI	00:14	00:34	00:54	03:54	04:14	04:34		21:14
BOSB	00:23	00:43	01:03	04:03	04:23	04:43		21:23
BWKS	00:47	01:07	01:27	04:27	04:47	05:07		21:47
BGWD	00:50	01:10						

(abends)

BSTN		21:09		
BSTV	20	21:20		
BMDF		21:41	20	23:41
BLI		21:54		23:54
BOSB		22:03		00:03
BWKS		22:27		00:27
BGWD				

S5 E (Sa)

BSTN								05:09	20	05:49	40	09:09	20	19:09	40	20:29
BSTV								05:20		06:00	20	09:20		19:20	20	20:40
BMDF	00:01	00:21	00:42	NV	04:42	05:01	20	05:41		06:21		09:41		19:41		21:01
BLI	00:14	00:34	00:54		04:54	05:14		05:54		06:34		09:54		19:54		21:14
BOSB	00:23	00:42	01:07		05:02	05:22		06:02		06:42		10:02		20:02		21:22
BWKS	00:47				05:27	05:47		06:27		07:07		10:27		20:27		21:27

S5 E (So)

BSTN								07:09	20	07:49	40	11:09	20	19:09	40	20:29
BSTV								07:20		08:00	20	11:20		19:20	20	20:40
BMDF	00:01	00:21	00:42	NV	06:42	07:01	20	07:41		08:21		11:41		19:41		21:01
BLI	00:14	00:34	00:54		06:54	07:14		07:54		08:34		11:54		19:54		21:14
BOSB	00:23	00:42	01:07		07:02	07:22		08:02		08:42		12:02		20:02		21:22
BWKS	00:47				07:27	07:47		08:27		09:07		12:27		20:27		21:27

S5 E (Mo-Fr)

BGWD					03:44	04:04	04:24				
BWKS	00:07	00:27	00:37		03:47	04:07	04:27	20	19:07	20	19:47
BOSB	00:32	00:52	01:02	03:52	04:12	04:32	04:52		19:32		20:12
BLI	00:41	01:01	01:10	04:01	04:21	04:41	05:01		19:41		20:21
BMDF	00:52	01:13		04:13	04:33	04:53	05:13		19:53		20:33
BSTV		01:34		04:34	04:54	05:14	05:34		20:14		20:54
BSTN		01:44		04:44	05:04	05:24	05:44		20:24		21:04

(abends) / **Fr**

BGWD				
BWKS	20	23:27	23:47	23:47
BOSB		23:32	00:12	00:12
BLI		00:01	00:21	00:21
BMDF		00:12	00:32	00:33
BSTV				00:54
BSTN				01:04

S5 E (Sa)

BGWD									06:24						
BWKS	00:07						05:07	20	06:27	20	07:47	20	17:47	20	19:47
BOSB	00:32	00:53	01:13	NV	04:52	20	05:32		06:52		08:12		18:12		20:12
BLI	00:41	01:05	01:22		05:01		05:41		07:01		08:21		18:21		20:21
BMDF	00:52	01:16	01:35		05:13		05:53		07:13		08:33		18:33		20:33
BSTV			01:55		05:34		06:14		07:34		08:54		18:54		20:54
BSTN			02:06		05:44		06:24	40	07:44	40	09:04		19:04	40	21:04

S5 E (So)

BGWD									08:24						
BWKS	00:07						07:07	20	08:27	20	09:47	20	17:47	20	19:47
BOSB	00:32	00:53	01:13	NV	06:52	20	07:32		08:52		10:12		18:12		20:12
BLI	00:41	01:05	01:22		07:01		07:41		09:01		10:21		18:21		20:21
BMDF	00:52	01:16	01:35		07:13		07:53		09:13		10:33		18:33		20:33
BSTV			01:55		07:34		08:14		09:34		10:54		18:54		20:54
BSTN			02:06		07:44		08:24	40	09:44	40	11:04		19:04	40	21:04

S5 EI (Mo-Fr)

BHPG						05:24	20	09:04		13:04	20	19:44
BMDF			04:31	04:51	20	05:31		09:11	20	13:11		19:51
BLI	04:04	20	04:44	05:04		05:44		09:24		13:24		20:04
BWRS	04:10		04:51	05:11		05:51		09:31		13:31		20:11
BOSB				05:13		05:53		09:33		13:33		20:13
BWKS				05:37		06:17		09:57		13:57		20:37

(abends)

BHPG						
BMDF	20	21:11	21:31	21:49	20	23:09
BLI		21:24	21:44	22:04		23:24
BWRS		21:31	21:50	22:10		23:30
BOSB						
BWKS						

S5 EI (Sa)

BHPG				
BMDF		06:11	20	19:51
BLI	06:04	06:24		20:04
BWRS	06:11	06:31		20:11
BOSB	06:13	06:33		20:13
BWKS	06:37	06:57		20:37

S5 EI (So)

BHPG				
BMDF		08:11	20	19:51
BLI	08:04	08:24		20:04
BWRS	08:11	08:31		20:11
BOSB	08:13	08:33		20:13
BWKS	08:37	08:57		20:37

S5 EI (Mo-Fr)

BWKS				05:17	20	07:57	08:17	08:37	20	11:37	11:57	20	18:37	18:57	20	19:57
BOSB				05:42		08:22	08:42	09:02		12:02	12:22		19:02	19:22		20:22
BWRS	04:24	04:44	20	05:44		08:24	08:44	09:04		12:04	12:24		19:04	19:24		20:24
BLI	04:31	04:51		05:51		08:31	08:51	09:11		12:11	12:31		19:11	19:31		20:31
BMDF	04:44	05:03		06:03		08:43	09:02	09:24		12:24	12:43		19:23	19:42		20:42
BHPG		05:09		06:09		08:49					12:49		19:29			

(abends)

BWKS	20:17	20:37						
BOSB	20:42	21:02						
BWRS	20:44	21:04	21:24	21:44	20	23:04	23:22	23:42
BLI	20:51	21:11	21:31	21:51		23:11	23:28	23:48
BMDF	21:04	21:22	21:42	22:04		23:24		
BHPG								

S5 EI (Sa)

BWKS		06:17	20	19:17	19:37	19:57
BOSB		06:42		19:42	20:02	20:22
BWRS	06:24	06:44		19:44	20:04	20:24
BLI	06:31	06:51		19:51	20:11	20:31
BMDF	06:44	07:04		20:04	20:22	20:42
BHPG						

S5 EI (So)

BWKS		08:17	20	19:17	19:37	19:57
BOSB		08:42		19:42	20:02	20:22
BWRS	08:24	08:44		19:44	20:04	20:24
BLI	08:31	08:51		19:51	20:11	20:31
BMDF	08:44	09:04		20:04	20:22	20:42
BHPG						

S5 EII (Mo-Fr*)

BMDF	05:56	20	08:36	14:16	20	17:56
BOSB	06:17		08:57	14:37		18:17

S5 EII (Mo-Fr*)

BOSB	06:27	20	08:07		14:07	20	18:27
BLI	06:36		08:16	13:56	14:16		18:16
BMDF	06:48		08:28	14:08	14:28		18:28

S5 EIII / **FS** / **(Sa)** / **(So)**

BSTN	00:09		21:49	40	23:09		23:49	04:12	04:49	06:12	06:49
BSTV	00:20	21:40	22:00	20	23:20	23:40	00:00	04:22	05:00	06:22	07:00
BMDF	00:40	22:00	22:20		23:40	00:00	00:20	04:41	05:20	06:41	07:20

S5 EIII (abends) / **F-S** / **(Sa)** / **(So)**

BMDF	00:53	20:53	21:13	20	23:33	23:53	00:33	01:17	01:17
BSTV	01:14	21:13	21:34		23:54	00:13	00:54	01:35	01:35
BSTN	01:25		21:44	40	00:04		01:04	01:45	01:45

***: Die Zuggruppe EII fährt nur montags bis freitags außerhalb der Sommerferien**

S7 O (Mo-Fr)

BAF	00:11	20	00:51			04:11	20	23:51
BLI	00:26		01:06		04:06	04:26		00:06
BCHS	00:57		01:37	04:17	04:37	04:57		00:37
BGWD	01:03		01:42	04:23	04:43	05:03		00:43
BPDH	01:22			04:42	05:02	05:22		01:02

S7 O (Sa)

BAF	00:11	00:31	00:51	NV	04:23	04:51	20	23:51
BLI	00:26	00:46	01:08		04:39	05:06		00:06
BCHS	00:57	01:21	01:51		05:17	05:37		00:37
BGWD	01:03	01:33	02:03		05:23	05:43		00:43
BPDH	01:22	01:52	02:22		05:42	06:02		01:02

S7 O (So)

BAF	00:11	00:31	00:51	NV	06:23	06:51	20	23:51
BLI	00:26	00:46	01:08		06:39	07:06		00:06
BCHS	00:57	01:21	01:51		07:17	07:37		00:37
BGWD	01:03	01:33	02:03		07:23	07:43		00:43
BPDH	01:22	01:52	02:22		07:42	08:02		01:02

S7 O (Mo-Fr)

BPDH	00:01	00:21	00:41			04:01	20	23:41
BGWD	00:22	00:42	01:02		04:02	04:22		00:02
BOSB	00:49	01:09	01:29	04:09	04:29	04:49		00:29
BLI	00:58	01:18		04:18	04:38	04:58		00:38
BAF	01:14			04:34	04:54	05:14		00:54

S7 O (Sa)

BPDH	00:01	00:21	NV	04:11	04:41	20	23:41
BGWD	00:22	00:42		04:32	05:02		00:02
BOSB	00:49	01:09		05:09	05:29		00:29
BLI	00:58	01:20		05:18	05:38		00:38
BAF	01:14	01:35		05:34	05:54		00:54

S7 O (So)

BPDH	00:01	00:21	NV	06:11	06:41	20	23:41
BGWD	00:22	00:42		06:32	07:02		00:02
BOSB	00:49	01:09		07:09	07:29		00:29
BLI	00:58	01:20		07:18	07:38		00:38
BAF	01:14	01:35		07:34	07:54		00:54

S7 OI (Mo-Fr)

BAF				05:01	20	20:01	20:21	20	22:01	20	22:41	23:01
BOSB			05:06	05:26		20:26	20:46		22:26		23:06	23:26
BCHS		05:07	05:27	05:47		20:47	21:07		22:47		23:27	23:47
BWKS		05:10	05:30	05:50		20:50	21:10		22:50		23:30	
BGWD		05:13	05:33	05:53		20:53	21:13		22:53		23:32	
BWSS	05:02	05:23	05:43	06:03		21:03	21:22		23:02			
BPDH	05:12	05:32	05:52	06:12		21:12						

S7 OI (Sa)

BAF				07:01	20	20:01	20:21	20	22:01	20	22:41	23:01
BOSB			07:06	07:26		20:26	20:46		22:26		23:06	23:26
BCHS		07:07	07:27	07:47		20:47	21:07		22:47		23:27	23:47
BWKS		07:10	07:30	07:50		20:50	21:10		22:50		23:30	
BGWD		07:13	07:33	07:53		20:53	21:13		22:53		23:32	
BWSS	07:03	07:23	07:43	08:03		21:03	21:22		23:02			
BPDH	07:12	07:32	07:52	08:12		21:12						

S7 OI (So)

BAF				09:01	20	20:01	20	20:41	21:01
BOSB			09:06	09:26		20:26		20:56	21:16
BCHS		09:07	09:27	09:47		20:47		21:27	21:47
BWKS		09:10	09:30	09:50		20:50		21:30	
BGWD		09:13	09:33	09:53		20:53		21:32	
BWSS	09:03	09:23	09:43	10:03		21:03			
BPDH	09:12	09:32	09:52	10:12		21:12			

S7 OI (Mo-Fr)

BPDH					05:11	20	21:11			
BWSS				05:02	05:22		21:22			
BGWD		04:32	20	05:12	05:32		21:32			
BWKS		04:35		05:15	05:35		21:35	20	22:35	22:55
BOSB	04:39	04:59		05:39	05:59		21:59		22:59	23:19
BAF	05:04	05:24		06:04	06:24		22:24		23:24	

S7 OI (Sa)

BPDH					07:11	20	21:11			
BWSS				07:02	07:22		21:22			
BGWD		06:32	20	07:12	07:32		21:32			
BWKS		06:35		07:15	07:35		21:35	20	22:35	22:55
BOSB	06:39	06:59		07:39	07:59		21:59		22:59	23:19
BAF	07:04	07.24		08:04	08:24		22:24		23:24	

S7 OI (So)

BPDH					09:11	20	20:11	20:31	20	21:11
BWSS				09:02	09:22		20:22	20:42		21:22
BGWD		08:32	20	09:12	09:32		20:32	20:52		
BWKS		08:35		09:15	09:35		20:35	20:55		
BOSB	08:39	08:59		09:39	09:59		20:59	21:19		
BAF	09:04	09:24		10:04	10:24		21:24			

S75 T (Mo-Fr)

BWAB	00:16	00:36	03:56	20	23:56
BLI	00:31	00:51	04:11		00:11
BWRS	00:38	00:58	04:18		00:18

S75 T (Sa)

BWAB	00:16	NV	04:36	20	23:56
BLI	00:31		04:51		00:11
BWRS	00:38		04:58		00:18

S75 T (So)

BWAB	00:16	NV	06:36	20	23:56
BLI	00:31		06:51		00:11
BWRS	00:38		06:58		00:18

S75 T (Mo-Fr)

BWRS	00:10	20	00:50	04:07	20	21:07	21:30	20	23:50
BLI	00:16		00:56	04:13		21:13	21:36		23:56
BWAB	00:29		01:09	04:29		21:29	21:49		00:09

S75 T (Sa)

BWRS	00:10	00:30		04:47	20	21:07	21:30	20	23:50
BLI	00:16	00:36	NV	04:53		21:13	21:36		23:56
BWAB	00:29	00:49		05:09		21:29	21:49		00:09

S75 T (So)

BWRS	00:10	00:30		06:47	20	21:07	21:30	20	23:50
BLI	00:16	00:36	NV	06:53		21:13	21:36		23:56
BWAB	00:29	00:49		07:09		21:29	21:49		00:09

S75 TI (Mo-Fr) / **S75 TI (Sa)** / **S75 TI (So)**

BWAB	05:06	20	21:06	08:46	20	20:06	10:46	20	20:06
BWRS	05:28		21:28	09:08		20:28	11:08		20:28

S75 TI (Mo-Fr)

BOSB		04:54	05:14		
BWRS		04:57	05:17	20	20:37
BLI	04:43	05:03	05:23		20:43
BWAB	04:59	05:19	05:39		20:59

S75 TI (Sa)

BOSB					
BWRS			09:17	20	19:37
BLI	08:23	20	09:23		19:43
BWAB	08:39		09:39		19:59

S75 TI (So)

BOSB					
BWRS			11:17	20	19:37
BLI	10:23	20	11:23		19:43
BWAB	10:39		11:39		19:59

S8 N (Mo-Do)

BZTH						05:20	20*	09:00					15:00	20*	18:00	20*	19:40
BGAS	00:08	00:28	00:48	04:08	20*	05:28		09:08	20*	13:08	13:28	20*	15:08		18:08		19:48
BPKW	00:47	01:07	01:27	04:47		06:07		09:47		13:47	14:07		15:47		18:47		20:27
BBLB		01:12	01:32	04:52		06:12		09:52		13:52	14:12		15:52		18:52		20:32
BBIW				05:13		06:33		10:13		14:13	14:33		16:13		19:13		20:56

abends

BZTH					
BGAS	20:08	20	20:48	20	23:48
BPKW	20:47		21:27		00:27
BBLB	20:52		21:32		00:32
BBIW	21:13		21:53	60	00:53

S8 N (Fr)

BZTH	13:20	20*		
BGAS	13:28		20	19:48
BPKW	14:07			20:27
BBLB	14:12			20:32
BBIW	14:33			20:53

S8 N (Sa)

BZTH									
BGAS	00:08	00:28	NV	04:20	04:48	20	06:48	20	19:48
BPKW	00:47	01:07		04:57	05:27		07:27		20:27
BBLB	00:52	01:12		05:02	05:32		07:32		20:32
BBIW				05:23	05:53	60	07:53		20:53

S8 N (So)

BZTH													
BGAS	00:08	00:28	NV	04:18	04:48	30	06:48	20	07:48	20	08:28	20	19:48
BPKW	00:47	01:07		04:57	05:27		07:27		08:27		09:07		20:27
BBLB	00:52	01:12		05:02	05:32		07:32		08:32		09:12		20:32
BBIW				05:23	05:53	60	07:53	60	08:53		09:33		20:53

*: Die Fahrten zur Minute 32 ab Blankenburg halten zwei Minuten später in Hohen Neuendorf und drei Minuten später in Birkenwerder (Sa/So nur in geraden Stunden).

S8 N (Mo-Do)

BBIW						04:24	20	07:44	20	11:44	12:04	20	13:44	20	16:44	20	18:24	20	20:24
BBLB	00:05	00:25		04:05	04:25	04:45		08:05		12:05	12:25		14:05		17:05		18:45		20:45
BPKW	00:10	00:30	00:50	04:10	04:30	04:50		08:10		12:10	12:30		14:10		17:10		18:50		20:50
BGAS	00:47	01:07	01:27	04:47	05:07	05:27		08:47		12:47	13:07		14:47		17:47		19:27		21:27
BZTH					05:15	05:35		08:55					14:55		17:55		19:35		

abends

BBIW	20:44		21:24	60	23:24
BBLB	21:05	20	21:45	20	23:45
BPKW	21:10		21:50		23:50
BGAS	21:47		22:27		00:27
BZTH					

S8 N (Fr)

BBIW	12:04	20	20	18:24
BBLB	12:25			18:45
BPKW	12:30			18:50
BGAS	13:07			19:27
BZTH	13:15			

S8 N (Sa)

BBIW		00:04			04:24	60	07:24	20	20:24
BBLB	00:05	00:25	00:55		04:45	20	07:45		20:45
BPKW	00:10	00:30	01:00	NV	04:50		07:50		20:50
BGAS	00:47	01:07	01:37		05:27		08:27		21:27
BZTH									

S8 N (So)

BBIW		00:04			04:34		05:37		06:24	60	08:24		09:04	20	20:24
BBLB	00:05	00:25	00:55		04:55	05:25	05:58	06:25	06:45	20	08:45	20	09:25		20:45
BPKW	00:10	00:30	01:03	NV	05:00	05:30	06:03	06:30	06:50		08:50		09:30		20:50
BGAS	00:47	01:07	01:40		05:37	06:07	06:40	07:07	07:27		09:27		10:07		21:27
BZTH															

S85 NI (Mo-Fr)

BPKW		05:20	20	18:40	20	21:20	21:40
BSW	04:28	05:48		19:08		21:48	22:08
BGAS	04:37	05:57		19:17			22:17

S85 NI (Sa)

BPKW	08:00	20	20:40	20	21:40
BSW	08:28		21:08		22:08
BGAS			21:17		

S85 NI (So)

BPKW	10:00	20	20:40	20	21:20
BSW	10:28		21:08		21:48
BGAS			21:17		

S85 NI (Mo-Fr)

BGAS			05:19	20	19:19			
BSW	04:48	20	05:28		19:28	20	20:48	21:09
BPKW	05:18		05:58		19:58		21:18	21:38

S85 NI (Sa)

BGAS			08:19		
BSW	07:28	20	08:29	20	21:08
BPKW	07:58		08:58		21:38

S85 NI (So)

BGAS		09:39			
BSW	09:28	09:48	20	20:28	20:49
BPKW	09:58	10:18		20:58	21:18

S9 C (Mo-Fr)														Fr	S9 C (Sa)													S9 C (So)									
BFBB ✈	00:08	20	00:48	01:08	01:28			03:35		04:08	20	23:28	23:48	23:48	00:08	00:28		NV	04:24		04:54		05:28	20	23:28	23:48	00:08	00:28		NV	06:24		07:08	20	23:48
BFLH ✈	00:17		00:57	01:17	01:37			03:43	03:57	04:17		23:37	23:57	23:57	00:17	00:37	00:55		04:32	04:57	05:02	05:17	05:37		23:37	23:57	00:17	00:37	00:55		06:32	06:57	07:17		23:57
BSW	00:32		01:12	01:32	01:52		03:52		04:12	04:32		23:52	00:12	00:12	00:32	00:52	01:10		04:47	05:12		05:32	05:52		23:52	00:12	00:32	00:52	01:10		06:48	07:12	07:32		00:12
BWRS	00:46		01:26	01:46	02:06	03:46	04:06		04:26	04:46		00:06	00:26	00:26	00:46	01:04	01:23		05:04	05:26		05:46	06:06		00:06	00:26	00:46	01:04	01:23		07:04	07:26	07:46		00:26
BOSB	00:49		01:29	01:49	02:08	03:49	04:09		04:29	04:49		00:09	00:29	00:29	00:49	01:07	01:26		05:09	05:29		05:49	06:09		00:09	00:29	00:49	01:07	01:26		07:09	07:29	07:49		00:29
BWKS	01:12		01:52			04:13	04:33		04:53	05:13		00:33	00:53	00:53	01:13	01:40			05:33	05:53		06:13	06:33		00:33	00:53	01:13	01:40			07:33	07:53	08:13		00:53
BSPA						04:27	04:47		05:07	05:27		00:47	01:07	01:09	01:27	01:54			05:47	06:07		06:27	06:47		00:47	01:09	01:27	01:54			07:47	08:07	08:27		01:07

S9 C (Mo-Fr)													Fr	S9 C (Sa)													S9 C (So)														
BSPA	00:18	00:38				03:58	20	23:18	23:38	23:58	23:38	00:18	00:38	NV		03:36	04:06	04:36	04:58	20	23:18	23:38	23:58	00:18	00:38	NV	03:36	04:06	04:36	05:06	05:36		06:06	06:36	06:58	20	23:58
BWKS	00:32	00:52			03:12	04:12		23:32	23:52	00:12	23:52	00:32	00:52			03:50	04:20	04:50	05:12		23:32	23:52	00:12	00:32	00:52		03:50	04:20	04:50	05:20	05:50		06:20	06:50	07:12		00:12
BCHS	00:34	00:54		03:02	03:14	04:14		23:34	23:54	00:14	23:54	00:34	00:54			03:52	04:22	04:52	05:14		23:34	23:54	00:14	00:34	00:54		03:52	04:22	04:52	05:22	05:52		06:22	06:52	07:14		00:14
BALX	00:52	01:12	03:05	03:20	03:32	04:32		23:52	00:12	00:32	00:12	00:52	01:19			04:19	04:49	05:15	05:32		23:52	00:12	00:32	00:52	01:19		04:19	04:49	05:19	05:49	06:19		06:49	07:15	07:32		00:32
BOSB	00:57	01:17	03:09	03:24	03:37	04:37		23:57	00:17	00:37	00:17	00:57	01:23		04:17	04:23	04:53	05:19	05:37		23:57	00:17	00:37	00:57	01:23		04:23	04:53	05:23	05:53	06:23	06:37	06:53	07:19	07:37		00:37
BSW	01:13	01:33	03:22	03:37	03:53	04:53		00:13	00:33	00:53	00:33	01:20	01:50		04:33	04:50	05:16	05:33	05:53		00:13	00:33	00:53	01:20	01:50		04:50	05:20	05:50	06:20	06:40	06:53	07:13	07:33	07:53		00:53
BFLH ✈	01:28		03:37	03:52	04:08	05:08		00:28	00:48	01:08	00:47	01:37	02:07		04:47	05:09	05:30	05:48	06:08		00:28	00:47	01:08	01:37	02:07		05:09	05:37	06:07	06:36	06:54	07:08	07:28	07:48	08:08		01:08
BFBB ✈	01:36		03:45	04:00	04:16	05:16		00:36	00:56	01:16		01:45	02:15			05:17	05:38	05:56	06:16		00:36		01:16	01:45	02:15		05:17	05:45	06:15		07:02	07:16	07:36	07:56	08:16		01:16

U1 → Uhlandstraße		(tagsüber)	(früh/abends)	(nachts)
WA	S U3 M BUS BUS	06 16 26 36 46 56	07 17 27 37 47 57	07 22 37 52
S	U3 BUS BUS	08 18 28 38 48 58	09 19 29 39 49 59	09 24 39 54
Gr	U3 M	10 20 30 40 50 00	11 21 31 41 51 01	11 26 41 56
Kbo	U3 U8 BUS	12 22 32 42 52 02	12 22 32 42 52 02	13 28 43 58
Pr	U3 BUS	14 24 34 44 54 04	14 24 34 44 54 04	15 30 45 00
Ho	U3 U6 M BUS BUS	16 26 36 46 56 06	16 26 36 46 56 06	17 32 47 02
Mo	U3 U7	17 27 37 47 57 07	18 28 38 48 58 08	18 33 48 03
Go	U2 U3	19 29 39 49 59 09	19 29 39 49 59 09	20 35 50 05
Kus	U3 M BUS	21 31 41 51 01 11	21 31 41 51 01 11	22 37 52 07
Nu	U2 U3 U4 M BUS BUS	22 32 42 52 02 12	23 33 43 53 03 13	23 38 53 08
Wt	U2 U3 M BUS	24 34 44 54 04 14	25 35 45 55 05 15	25 40 55 10
Kfo	U9 M X BUS BUS	26 36 46 56 06 16	27 37 47 57 07 17	27 42 57 12
U	M X BUS BUS	27 37 47 57 07 17	28 38 48 58 08 18	28 43 58 13

U1 → Warschauer Straße		(tagsüber)	(früh/abends)	(nachts)
U	M X BUS BUS	00 10 20 30 40 50	00 10 20 30 40 50	02 17 32 47
Kfo	U9 M X BUS BUS	01 11 21 31 41 51	01 11 21 31 41 51	03 18 33 48
Wt	U2 U3 M BUS	02 12 22 32 42 52	02 12 22 32 42 52	04 19 34 49
Nm	U2 U3 U4 M BUS BUS	04 14 24 34 44 54	04 14 24 34 44 54	06 21 36 51
Kus	U3 M BUS	06 16 26 36 46 56	06 16 26 36 46 56	08 23 38 53
Go	U2 U3	08 18 28 38 48 58	08 18 28 38 48 58	10 25 40 55
Mo	U3 U7	09 19 29 39 49 59	09 19 29 39 49 59	11 26 41 56
Ho	U3 U6 M BUS BUS	11 21 31 41 51 01	11 21 31 41 51 01	13 28 43 58
Pr	U3 BUS	13 23 33 43 53 03	13 23 33 43 53 03	15 30 45 00
Kbo	U3 U8 BUS BUS	15 25 35 45 55 05	15 25 35 45 55 05	19 34 49 04
Gr	U3 M	16 26 36 46 56 06	16 26 36 46 56 06	20 35 50 05
S	U3 BUS BUS	18 28 38 48 58 08	18 28 38 48 58 08	22 37 52 07
WA	S U3 M BUS BUS	20 30 40 50 00 10	20 30 40 50 00 10	24 39 54 09

U3 → Krumme Lanke		(Mo-Fr tagsüber)	(Sa-So)	(früh/abends)	(nachts)
WA	S U1 M BUS BUS	03 09 13 19 23 29 33 39 43 49 53 59	01 11 21 31 41 51		
S	U1 BUS BUS	05 11 15 21 25 31 35 41 45 51 55 01	03 13 23 33 43 53		
Gr	U1 M	07 13 17 23 27 33 37 43 47 53 57 03	05 15 25 35 45 55		
Kbo	U1 U8 BUS	09 15 19 25 29 35 39 45 49 55 59 05	07 17 27 37 47 57		
Pr	U1 BUS	11 17 21 27 31 37 41 47 51 57 01 07	09 19 29 39 49 59		
Ho	U1 U6 M BUS BUS	13 19 23 29 33 39 43 49 53 59 03 09	11 21 31 41 51 01		
Mo	U1 U7	14 20 24 30 34 40 44 50 54 00 04 10	12 22 32 42 52 02		
Go	U1 U2	16 22 26 32 36 42 46 52 56 02 06 12	14 24 34 44 54 04		
Kus	U1 M BUS	18 24 28 34 38 44 48 54 58 04 08 14	16 26 36 46 56 06		
Nu	U1 U2 U4 M BUS BUS	19 25 29 35 39 45 49 55 59 05 09 15	17 27 37 47 57 07	08 18 28 38 48 58	12 27 42 57
Wt	U1 U2 M BUS	21 27 31 37 41 47 51 57 01 07 11 17	19 29 39 49 59 09	10 20 30 40 50 00	14 29 44 59
Au		23 29 33 39 43 49 53 59 03 09 13 19	21 31 41 51 01 11	12 22 32 42 52 02	16 31 46 01
Sno	U9 BUS	24 30 34 40 44 50 54 00 04 10 14 20	22 32 42 52 02 12	13 23 33 43 53 03	17 32 47 02
Hz	BUS	26 32 36 42 46 52 56 02 06 12 16 22	24 34 44 54 04 14	15 25 35 45 55 05	19 34 49 04
Fpo	U7 BUS BUS	28 34 38 44 48 54 58 04 08 14 18 24	26 36 46 56 06 16	17 27 37 47 57 07	20 35 50 05
Hb	S BUS	30 36 40 46 50 56 00 06 10 16 20 26	28 38 48 58 08 18	19 29 39 49 59 09	22 37 52 07
Rd	BUS	31 37 41 47 51 57 01 07 11 17 21 27	29 39 49 59 09 19	20 30 40 50 00 10	24 39 54 09
Bt	BUS	33 39 43 49 53 59 03 09 13 19 23 29	31 41 51 01 11 21	22 32 42 52 02 12	25 40 55 10
Po		34 40 44 50 54 00 04 10 14 20 24 30	32 42 52 02 12 22	23 33 43 53 03 13	27 42 57 12
Dd	M X	36 42 46 52 56 02 06 12 16 22 26 32	34 44 54 04 14 24	25 35 45 55 05 15	28 43 58 13
T	BUS	38 44 48 54 58 04 08 14 18 24 28 34	36 46 56 06 16 26	27 37 47 57 07 17	30 45 00 15
Os	X BUS BUS	39 45 49 55 59 05 09 15 19 25 29 35	37 47 57 07 17 27	28 38 48 58 08 18	32 47 02 17
Ot	BUS	41 47 51 57 01 07 11 17 21 27 31 37	39 49 59 09 19 29	30 40 50 00 10 20	34 49 04 19
K	X BUS	43 49 53 59 03 09 13 19 23 29 33 39	41 51 01 11 21 31	32 42 52 02 12 22	36 51 06 21

U3 → Warschauer Str.		(Mo-Fr tagsüber)	(Sa-So)	(früh/abends)	(nachts)
K	X BUS	03 07 13 17 23 27 33 37 43 47 53 57	05 15 25 35 45 55	06 16 26 36 46 56	10 25 40 55
Ot	BUS	05 09 15 19 25 29 35 39 45 49 55 59	07 17 27 37 47 57	08 18 28 38 48 58	12 27 42 57
Os	X BUS BUS	07 11 17 21 27 31 37 41 47 51 57 01	09 19 29 39 49 59	10 20 30 40 50 00	14 29 44 59
T	BUS	09 13 19 23 29 33 39 43 49 53 59 03	11 21 31 41 51 01	12 22 32 42 52 02	15 30 45 00
Dd	M X	11 15 21 25 31 35 41 45 51 55 01 05	13 23 33 43 53 03	14 24 34 44 54 04	17 32 47 02
Po		12 16 22 26 32 36 42 46 52 56 02 06	14 24 34 44 54 04	15 25 35 45 55 05	19 34 49 04
Bt	BUS	14 18 24 28 34 38 44 48 54 58 04 08	16 26 36 46 56 06	17 27 37 47 57 07	20 35 50 05
Rd	BUS	15 19 25 29 35 39 45 49 55 59 05 09	17 27 37 47 57 07	18 28 38 48 58 08	22 37 52 07
Hb	S BUS	17 21 27 31 37 41 47 51 57 01 07 11	19 29 39 49 59 09	20 30 40 50 00 10	23 38 53 08
Fpo	U7 BUS BUS	19 23 29 33 39 43 49 53 59 03 09 13	21 31 41 51 01 11	22 32 42 52 02 12	25 40 55 10
Hz	BUS	20 24 30 34 40 44 50 54 00 04 10 14	22 32 42 52 02 12	23 33 43 53 03 13	27 42 57 12
Sno	U9 BUS	22 26 32 36 42 46 52 56 02 06 12 16	24 34 44 54 04 14	25 35 45 55 05 15	29 44 59 14
Au		23 27 33 37 43 47 53 57 03 07 13 17	25 35 45 55 05 15	26 36 46 56 06 16	30 45 00 15
Wt	U1 U2 M BUS	25 29 35 39 45 49 55 59 05 09 15 19	27 37 47 57 07 17	28 38 48 58 08 18	32 47 02 17
Nm	U1 U2 U4 M BUS BUS	27 31 37 41 47 51 57 01 07 11 17 21	29 39 49 59 09 19	30 40 50 00 10 20	34 49 04 19
Kus	U1 M BUS	29 33 39 43 49 53 59 03 09 13 19 23	31 41 51 01 11 21		
Go	U1 U2	31 35 41 45 51 55 01 05 11 15 21 25	33 43 53 03 13 23		
Mo	U1 U7	32 36 42 46 52 56 02 06 12 16 22 26	34 44 54 04 14 24		
Ho	U1 U6 M BUS BUS	34 38 44 48 54 58 04 08 14 18 24 28	36 46 56 06 16 26		
Pr	U1 BUS	36 40 46 50 56 00 06 10 16 20 26 30	38 48 58 08 18 28		
Kbo	U1 U8 BUS	38 42 48 52 58 02 08 12 18 22 28 32	40 50 00 10 20 30		
Gr	U1 M	39 43 49 53 59 03 09 13 19 23 29 33	41 51 01 11 21 31		
S	U1 BUS BUS	41 45 51 55 01 05 11 15 21 25 31 35	43 53 03 13 23 33		
WA	S U1 M BUS BUS	43 47 53 57 03 07 13 17 23 27 33 37	45 55 05 15 25 35		

U2 → Ruhleben		(Mo-Fr HVZ)	(Mo-Fr NVZ,Sa-So,Ferien)	(früh/abends)	(nachts)
PA	S M Tram M X BUS BUS	03 07 11 15 19 23 27 31 35 39 43 47 51 55 59	04 09 14 19 24 29 34 39 44 49 54 59	04 14 24 34 44 54	09 24 39 54
VIN	M Tram BUS	04 08 12 16 20 24 28 32 36 40 44 48 52 56 00	05 10 15 20 25 30 35 40 45 50 55 00	06 16 26 36 46 56	11 26 41 56
Sh	S M	06 10 14 18 22 26 30 34 38 42 46 50 54 58 02	07 12 17 22 27 32 37 42 47 52 57 02	08 18 28 38 48 58	13 28 43 58
EB	M Tram	08 12 16 20 24 28 32 36 40 44 48 52 56 00 04	09 14 19 24 29 34 39 44 49 54 59 04	10 20 30 40 50 00	15 30 45 00
Sz		10 14 18 22 26 30 34 38 42 46 50 54 58 02 06	11 16 21 26 31 36 41 46 51 56 01 06	12 22 32 42 52 02	17 32 47 02
Lu	M BUS	12 16 20 24 28 32 36 40 44 48 52 56 00 04 08	13 18 23 28 33 38 43 48 53 58 03 08	13 23 33 43 53 03	18 33 48 03
A	Bahn S U5 U8 M BUS BUS	14 18 22 26 30 34 38 42 46 50 54 58 02 06 10	15 20 25 30 35 40 45 50 55 00 05 10	15 25 35 45 55 05	20 35 50 05
Ko		16 20 24 28 32 36 40 44 48 52 56 00 04 08 12	17 22 27 32 37 42 47 52 57 02 07 12	17 27 37 47 57 07	22 37 52 07
Mk	BUS	17 21 25 29 33 37 41 45 49 53 57 01 05 09 13	18 23 28 33 38 43 48 53 58 03 08 13	19 29 39 49 59 09	24 39 54 09
Sp	BUS BUS	19 23 27 31 35 39 43 47 51 55 59 03 07 11 15	20 25 30 35 40 45 50 55 00 05 10 15	20 30 40 50 00 10	25 40 55 10
Hv		21 25 29 33 37 41 45 49 53 57 01 05 09 13 17	22 27 32 37 42 47 52 57 02 07 12 17	22 32 42 52 02 12	27 42 57 12
Mi	U6 BUS	23 27 31 35 39 43 47 51 55 59 03 07 11 15 19	24 29 34 39 44 49 54 59 04 09 14 19	24 34 44 54 04 14	29 44 59 14
MH	M BUS	24 28 32 36 40 44 48 52 56 00 04 08 12 16 20	25 30 35 40 45 50 55 00 05 10 15 20	25 35 45 55 05 15	30 45 00 15
Pd	Bahn S M BUS	25 29 33 37 41 45 49 53 57 01 05 09 13 17 21	26 31 36 41 46 51 56 01 06 11 16 21	27 37 47 57 07 17	32 47 02 17
MB	M	27 31 35 39 43 47 51 55 59 03 07 11 15 19 23	28 33 38 43 48 53 58 03 08 13 18 23	28 38 48 58 08 18	33 48 03 18
Gu	U1 U3	28 32 36 40 44 48 52 56 00 04 08 12 16 20 24	29 34 39 44 49 54 59 04 09 14 19 24	30 40 50 00 10 20	35 50 05 20
Bs	M BUS	30 34 38 42 46 50 54 58 02 06 10 14 18 22 26	31 36 41 46 51 56 01 06 11 16 21 26	32 42 52 02 12 22	37 52 07 22
No	U1 U3 U4 M BUS BUS	32 36 40 44 48 52 56 00 04 08 12 16 20 24 28	33 38 43 48 53 58 03 08 13 18 23 28	33 43 53 03 13 23	38 53 08 23
Wt	U1 U3 M BUS	33 37 41 45 49 53 57 01 05 09 13 17 21 25 29	34 39 44 49 54 59 04 09 14 19 24 29	35 45 55 05 15 25	40 55 10 25
Zo	Bahn S U9 M X BUS BUS	36 40 44 48 52 56 00 04 08 12 16 20 24 28 32	37 42 47 52 57 02 07 12 17 22 27 32	38 48 58 08 18 28	43 58 13 28
Zo	Bahn S U9 M X BUS BUS	36 40 44 48 52 56 00 04 08 12 16 20 24 28 32	37 42 47 52 57 02 07 12 17 22 27 32	38 48 58 08 18 28	45 00 15 30
RP	M X BUS	37 41 45 49 53 57 01 05 09 13 17 21 25 29 33	38 43 48 53 58 03 08 13 18 23 28 33	39 49 59 09 19 29	46 01 16 31
Obi		39 43 47 51 55 59 03 07 11 15 19 23 27 31 35	40 45 50 55 00 05 10 15 20 25 30 35	41 51 01 11 21 31	48 03 18 33
Bmo	U7	40 44 48 52 56 00 04 08 12 16 20 24 28 32 36	41 46 51 56 01 06 11 16 21 26 31 36	42 52 02 12 22 32	49 04 19 34
So	BUS	42 46 50 54 58 02 06 10 14 18 22 26 30 34 38	43 48 53 58 03 08 13 18 23 28 33 38	44 54 04 14 24 34	51 06 21 36
Kd	S BUS	43 47 51 55 59 03 07 11 15 19 23 27 31 35 39	44 49 54 59 04 09 14 19 24 29 34 39	45 55 05 15 25 35	52 07 22 37
Th	M X BUS BUS	45 49 53 57 01 05 09 13 17 21 25 29 33 37 41	46 51 56 01 06 11 16 21 26 31 36 41	47 57 07 17 27 37	54 09 24 39
Nd/u	BUS	51 59 03 11 19 27 35 43	53 03 13 23 33 43	49 59 09 19 29 39	56 11 26 41
Nd/g	BUS	47 55 07 15 23 31 39	53 03 13 23 33 43	49 59 09 19 29 39	56 11 26 41
Sd/u		52 04 12 20 28 36 44	54 04 14 24 34 44	50 00 10 20 30 40	57 12 27 42
Sd/g		48 56 00 08 16 24 32 40	54 04 14 24 34 44	50 00 10 20 30 40	57 12 27 42
Rl/u	M X BUS	54 06 14 22 30 38 46	56 06 16 26 36 46	52 02 12 22 32 42	59 14 29 44
Rl/g	M X BUS	50 58 02 10 18 26 34 42	56 06 16 26 36 46	52 02 12 22 32 42	59 14 29 44

U2 → Pankow		(Mo-Fr HVZ)	(Mo-Fr NVZ,Sa-So,Ferien)	(früh/abends)	(nachts)
Rl/u	M X BUS	03 11 19 27 35 43 51 59	03 13 23 33 43 53	03 13 23 33 43 53	13 28 43 58
Rl/g	M X BUS	07 15 23 31 39 47 55	03 13 23 33 43 53	03 13 23 33 43 53	13 28 43 58
Sd/u		05 13 21 29 37 45 53	05 15 25 35 45 55	05 15 25 35 45 55	15 30 45 00
Sd/g		09 17 25 33 41 49 57 01	05 15 25 35 45 55	05 15 25 35 45 55	15 30 45 00
Nd/u	BUS	07 15 23 31 39 47 55	07 17 27 37 47 57	06 16 26 36 46 56	16 31 46 01
Nd/g	BUS	11 19 27 35 43 51 59 03	07 17 27 37 47 57	06 16 26 36 46 56	16 31 46 01
Th	M X BUS BUS	09 13 17 21 25 29 33 37 41 45 49 53 57 01 05	04 09 14 19 24 29 34 39 44 49 54 59	08 18 28 38 48 58	18 33 48 03
Kd	S BUS	10 14 18 22 26 30 34 38 42 46 50 54 58 02 06	05 10 15 20 25 30 35 40 45 50 55 00	10 20 30 40 50 00	20 35 50 05
So	BUS	12 16 20 24 28 32 36 40 44 48 52 56 00 04 08	07 12 17 22 27 32 37 42 47 52 57 02	11 21 31 41 51 01	21 36 51 06
Bmo	U7	13 17 21 25 29 33 37 41 45 49 53 57 01 05 09	08 13 18 23 28 33 38 43 48 53 58 03	13 23 33 43 53 03	23 38 53 08
Obi		14 18 22 26 30 34 38 42 46 50 54 58 02 06 10	09 14 19 24 29 34 39 44 49 54 59 04	14 24 34 44 54 04	24 39 54 09
RP	M X BUS	16 20 24 28 32 36 40 44 48 52 56 00 04 08 12	11 16 21 26 31 36 41 46 51 56 01 06	16 26 36 46 56 06	26 41 56 11
Zo	Bahn S U9 M X BUS BUS	18 22 26 30 34 38 42 46 50 54 58 02 06 10 14	13 18 23 28 33 38 43 48 53 58 03 08	18 28 38 48 58 08	28 43 58 13
Zo	Bahn S U9 M X BUS BUS	18 22 26 30 34 38 42 46 50 54 58 02 06 10 14	13 18 23 28 33 38 43 48 53 58 03 08	18 28 38 48 58 08	30 45 00 15
Wt	U1 U3 M BUS	20 24 28 32 36 40 44 48 52 56 00 04 08 12 16	15 20 25 30 35 40 45 50 55 00 05 10	21 31 41 51 01 11	32 47 02 17
No	U1 U3 U4 M BUS BUS	22 26 30 34 38 42 46 50 54 58 02 06 10 14 18	17 22 27 32 37 42 47 52 57 02 07 12	22 32 42 52 02 12	33 48 03 18
Bs	M BUS	23 27 31 35 39 43 47 51 55 59 03 07 11 15 19	18 23 28 33 38 43 48 53 58 03 08 13	24 34 44 54 04 14	35 50 05 20
Gu	U1 U3	25 29 33 37 41 45 49 53 57 01 05 09 13 17 21	20 25 30 35 40 45 50 55 00 05 10 15	26 36 46 56 06 16	37 52 07 22
MB	M	27 31 35 39 43 47 51 55 59 03 07 11 15 19 23	22 27 32 37 42 47 52 57 02 07 12 17	27 37 47 57 07 17	38 53 08 23
Pd	Bahn S M BUS	28 32 36 40 44 48 52 56 00 04 08 12 16 20 24	23 28 33 38 43 48 53 58 03 08 13 18	29 39 49 59 09 19	40 55 10 25
MH	M BUS	30 34 38 42 46 50 54 58 02 06 10 14 18 22 26	25 30 35 40 45 50 55 00 05 10 15 20	30 40 50 00 10 20	41 56 11 26
Mi	U6 BUS	31 35 39 43 47 51 55 59 03 07 11 15 19 23 27	26 31 36 41 46 51 56 01 06 11 16 21	31 41 51 01 11 21	42 57 12 27
Hv		32 36 40 44 48 52 56 00 04 08 12 16 20 24 28	27 32 37 42 47 52 57 02 07 12 17 22	33 43 53 03 13 23	44 59 14 29
Sp	BUS BUS	34 38 42 46 50 54 58 02 06 10 14 18 22 26 30	29 34 39 44 49 54 59 04 09 14 19 24	34 44 54 04 14 24	45 00 15 30
Mk	BUS	35 39 43 47 51 55 59 03 07 11 15 19 23 27 31	30 35 40 45 50 55 00 05 10 15 20 25	35 45 55 05 15 25	46 01 16 31
Ko		36 40 44 48 52 56 00 04 08 12 16 20 24 28 32	31 36 41 46 51 56 01 06 11 16 21 26	37 47 57 07 17 27	48 03 18 33
A	Bahn S U5 U8 M BUS BUS	38 42 46 50 54 58 02 06 10 14 18 22 26 30 34	33 38 43 48 53 58 03 08 13 18 23 28	39 49 59 09 19 29	50 05 20 35
Lu	M BUS	40 44 48 52 56 00 04 08 12 16 20 24 28 32 36	35 40 45 50 55 00 05 10 15 20 25 30	41 51 01 11 21 31	52 07 22 37
Sz		42 46 50 54 58 02 06 10 14 18 22 26 30 34 38	37 42 47 52 57 02 07 12 17 22 27 32	42 52 02 12 22 32	53 08 23 38
EB	M Tram	44 48 52 56 00 04 08 12 16 20 24 28 32 36 40	39 44 49 54 59 04 09 14 19 24 29 34	44 54 04 14 24 34	55 10 25 40
Sh	S M	46 50 54 58 02 06 10 14 18 22 26 30 34 38 42	41 46 51 56 01 06 11 16 21 26 31 36	46 56 06 16 26 36	57 12 27 42
VIN	M Tram BUS	48 52 56 00 04 08 12 16 20 24 28 32 36 40 44	43 48 53 58 03 08 13 18 23 28 33 38	49 59 09 19 29 39	00 15 30 45
PA	S M Tram M X BUS BUS	50 54 58 02 06 10 14 18 22 26 30 34 38 42 46	45 50 55 00 05 10 15 20 25 30 35 40	50 00 10 20 30 40	01 16 31 46

U5 → Hauptbahnhof		(Mo-Fr HVZ)	(Mo-Fr NVZ)	(früh/abends)	(nachts)
Hö	Bus	00 – alle 4-5 min	05 15 25 35 45 55	05 15 25 35 45 55	05 20 35 50
LL	Bus	02 – alle 4-5 min	07 17 27 37 47 57	07 17 27 37 47 57	07 22 37 52
Hd	M Tram X Bus	03 – alle 4-5 min	09 19 29 39 49 59	09 19 29 39 49 59	09 24 39 54
C	Bus	05 – alle 4-5 min	10 20 30 40 50 00	10 20 30 40 50 00	10 25 40 55
GK	Bus	06 – alle 4-5 min	12 22 32 42 52 02	12 22 32 42 52 02	12 27 42 57
KL	Bus Bus	08 – alle 4-5 min	08 13 18 23 28 33 38 43 48 53 58 03	13 23 33 43 53 03	13 28 43 58
Wh	S Bus Bus	10 – alle 4-5 min	11 16 21 26 31 36 41 46 51 56 01 06	16 26 36 46 56 06	16 31 46 01
E	X Bus Bus	12 – alle 4-5 min	13 18 23 28 33 38 43 48 53 58 03 08	18 28 38 48 58 08	18 33 48 03
Bü		14 – alle 4-5 min	15 20 25 30 35 40 45 50 55 00 05 10	20 30 40 50 00 10	20 35 50 05
Tk	M Tram Bus Bus	17 – alle 4-5 min	17 22 27 32 37 42 47 52 57 02 07 12	22 32 42 52 02 12	23 38 53 08
Fi	Bus Bus	19 – alle 4-5 min	19 24 29 34 39 44 49 54 59 04 09 14	24 34 44 54 04 14	25 40 55 10
Li	Bahn S Tram Bus Bus	21 – alle 4-5 min	21 26 31 36 41 46 51 56 01 06 11 16	26 36 46 56 06 16	27 42 57 12
Md	Bus Bus	22 – alle 4-5 min	23 28 33 38 43 48 53 58 03 08 13 18	28 38 48 58 08 18	28 43 58 13
Ff	S M Tram	24 – alle 4-5 min	24 29 34 39 44 49 54 59 04 09 14 19	29 39 49 59 09 19	30 45 00 15
Sa		25 – alle 4-5 min	26 31 36 41 46 51 56 01 06 11 16 21	31 41 51 01 11 21	31 46 01 16
Ft	M Tram	27 – alle 4-5 min	27 32 37 42 47 52 57 02 07 12 17 22	32 42 52 02 12 22	33 48 03 18
WR	Bus	28 – alle 4-5 min	28 33 38 43 48 53 58 03 08 13 18 23	33 43 53 03 13 23	34 49 04 19
Sr	Bus	29 – alle 4-5 min	30 35 40 45 50 55 00 05 10 15 20 25	35 45 55 05 15 25	35 50 05 20
Si		31 – alle 4-5 min	31 36 41 46 51 56 01 06 11 16 21 26	36 46 56 06 16 26	37 52 07 22
Al	Bahn S U2 U8 M Bus Bus	33 – alle 4-5 min	33 38 43 48 53 58 03 08 13 18 23 28	38 48 58 08 18 28	39 54 09 24
RHO	Bus Bus	34 – alle 4-5 min	34 39 44 49 54 59 04 09 14 19 24 29	39 49 59 09 19 29	40 55 10 25
MUI	Bus	36 – alle 4-5 min	36 41 46 51 56 01 06 11 16 21 26 31	41 51 01 11 21 31	41 56 11 26
ULU	U6 Bus Bus	37 – alle 4-5 min	37 42 47 52 57 02 07 12 17 22 27 32	42 52 02 12 22 32	43 58 13 28
BRT	S Bus Bus	38 – alle 4-5 min	38 43 48 53 58 03 08 13 18 23 28 33	43 53 03 13 23 33	44 59 14 29
BUN		39 – alle 4-5 min	40 45 50 55 00 05 10 15 20 25 30 35	45 55 05 15 25 35	45 00 15 30
HBF	DB Bahn S M M Bus Bus	41 – alle 4-5 min	41 46 51 56 01 06 11 16 21 26 31 36	46 56 06 16 26 36	47 02 17 32

U5 → Hönow		(Mo-Fr HVZ)	(Mo-Fr NVZ)	(früh/abends)	(nachts)
HBF	DB Bahn S M M Bus Bus	00 – alle 4-5 min	03 08 13 18 23 28 33 38 43 48 53 58	08 18 28 38 48 58	57 12 27 42
BUN		02 – alle 4-5 min	05 10 15 20 25 30 35 40 45 50 55 00	10 20 30 40 50 00	58 13 28 43
BRT	S Bus Bus	03 – alle 4-5 min	06 11 16 21 26 31 36 41 46 51 56 01	11 21 31 41 51 01	00 15 30 45
ULU	U6 Bus Bus	04 – alle 4-5 min	07 12 17 22 27 32 37 42 47 52 57 02	12 22 32 42 52 02	01 16 31 46
MUI	Bus	06 – alle 4-5 min	09 14 19 24 29 34 39 44 49 54 59 04	14 24 34 44 54 04	02 17 32 47
RHO	Bus Bus	07 – alle 4-5 min	10 15 20 25 30 35 40 45 50 55 00 05	15 25 35 45 55 05	04 19 34 49
Al	Bahn S U2 U8 M Bus Bus	09 – alle 4-5 min	12 17 22 27 32 37 42 47 52 57 02 07	17 27 37 47 57 07	05 20 35 50
Si		10 – alle 4-5 min	13 18 23 28 33 38 43 48 53 58 03 08	18 28 38 48 58 08	07 22 37 52
Sr	Bus	12 – alle 4-5 min	15 20 25 30 35 40 45 50 55 00 05 10	20 30 40 50 00 10	08 23 38 53
WR	Bus	13 – alle 4-5 min	16 21 26 31 36 41 46 51 56 01 06 11	21 31 41 51 01 11	10 25 40 55
Ft	M Tram	14 – alle 4-5 min	17 22 27 32 37 42 47 52 57 02 07 12	22 32 42 52 02 12	11 26 41 56
Sa		16 – alle 4-5 min	19 24 29 34 39 44 49 54 59 04 09 14	24 34 44 54 04 14	12 27 42 57
Ff	S M Tram	17 – alle 4-5 min	20 25 30 35 40 45 50 55 00 05 10 15	25 35 45 55 05 15	14 29 44 59
Md	Bus Bus	19 – alle 4-5 min	22 27 32 37 42 47 52 57 02 07 12 17	27 37 47 57 07 17	15 30 45 00
Li	Bahn S Tram Bus Bus	20 – alle 4-5 min	23 28 33 38 43 48 53 58 03 08 13 18	28 38 48 58 08 18	17 32 47 02
Fi	Bus Bus	22 – alle 4-5 min	25 30 35 40 45 50 55 00 05 10 15 20	30 40 50 00 10 20	19 34 49 04
Tk	M Tram Bus Bus	24 – alle 4-5 min	27 32 37 42 47 52 57 02 07 12 17 22	32 42 52 02 12 22	21 36 51 06
Bü		27 – alle 4-5 min	30 35 40 45 50 55 00 05 10 15 20 25	35 45 55 05 15 25	23 38 53 08
E	X Bus Bus	29 – alle 4-5 min	32 37 42 47 52 57 02 07 12 17 22 27	37 47 57 07 17 27	25 40 55 10
Wh	S Bus Bus	31 – alle 4-5 min	34 39 44 49 54 59 04 09 14 19 24 29	39 49 59 09 19 29	28 43 58 13
KL	Bus Bus	33 – alle 4-5 min	36 41 46 51 56 01 06 11 16 21 26 31	41 51 01 11 21 31	30 45 00 15
GK	Bus	35 – alle 4-5 min	43 53 03 13 23 33	43 53 03 13 23 33	32 47 02 17
C	Bus	36 – alle 4-5 min	44 54 04 14 24 34	44 54 04 14 24 34	33 48 03 18
Hd	M Tram X Bus	38 – alle 4-5 min	46 56 06 16 26 36	46 56 06 16 26 36	35 50 05 20
LL	Bus	39 – alle 4-5 min	47 57 07 17 27 37	47 57 07 17 27 37	36 51 06 21
Hö	Bus	41 – alle 4-5 min	49 59 09 19 29 39	49 59 09 19 29 39	38 53 08 23

U4 → Innsbrucker Pl.		(Mo-Sa HVZ)	(NVZ)
Nm	U1 U2 U3 M Bus Bus	00 05 10 15 20 25 30 35 40 45 50 55	06 16 26 36 46 56
V		02 07 12 17 22 27 32 37 42 47 52 57	08 18 28 38 48 58
Bpo	U7	03 08 13 18 23 28 33 38 43 48 53 58	09 19 29 39 49 59
RS	M Bus Bus	05 10 15 20 25 30 35 40 45 50 55 00	11 21 31 41 51 01
Ip	S M Bus	06 11 16 21 26 31 36 41 46 51 56 01	12 22 32 42 52 02

U4 → Nollendorfplatz		(Mo-Sa HVZ)	(NVZ)
Ip	S M Bus	01 06 11 16 21 26 31 36 41 46 51 56	06 16 26 36 46 56
RS	M Bus Bus	02 07 12 17 22 27 32 37 42 47 52 57	07 17 27 37 47 57
Bpo	U7	03 08 13 18 23 28 33 38 43 48 53 58	08 18 28 38 48 58
V		05 10 15 20 25 30 35 40 45 50 55 00	10 20 30 40 50 00
Nm	U1 U2 U3 M Bus Bus	07 12 17 22 27 32 37 42 47 52 57 02	12 22 32 42 52 02

U6 → Mariendorf		(tagsüber)	(früh/abends)	(nachts)
Tg	Bus Bus	02 07 12 17 22 27 32 37 42 47 52 57	03 13 23 33 43 53	05 20 35 50
Bk	Bus	03 08 13 18 23 28 33 38 43 48 53 58	05 15 25 35 45 55	07 22 37 52
Hh	X Bus Bus	05 10 15 20 25 30 35 40 45 50 55 00	06 16 26 36 46 56	08 23 38 53
OTI		06 11 16 21 26 31 36 41 46 51 56 01	07 17 27 37 47 57	09 24 39 54
Scha	Bus	07 12 17 22 27 32 37 42 47 52 57 02	09 19 29 39 49 59	11 26 41 56
Sch	M X Bus	09 14 19 24 29 34 39 44 49 54 59 04	10 20 30 40 50 00	12 27 42 57
Afr	Bus	10 15 20 25 30 35 40 45 50 55 00 05	12 22 32 42 52 02	14 29 44 59
Rb		11 16 21 26 31 36 41 46 51 56 01 06	13 23 33 43 53 03	15 30 45 00
Se	M Tram Bus Bus	13 18 23 28 33 38 43 48 53 58 03 08	15 25 35 45 55 05	17 32 47 02
Lpo	U9 Bus Bus	15 20 25 30 35 40 45 50 55 00 05 10	16 26 36 46 56 06	20 35 50 05
We	S M Bus Bus	16 21 26 31 36 41 46 51 56 01 06 11	17 27 37 47 57 07	21 36 51 06
Ri	M Bus Bus	17 22 27 32 37 42 47 52 57 02 07 12	18 28 38 48 58 08	22 37 52 07
Sk		18 23 28 33 38 43 48 53 58 03 08 13	20 30 40 50 00 10	23 38 53 08
NA	M Tram Bus	19 24 29 34 39 44 49 54 59 04 09 14	21 31 41 51 01 11	24 39 54 09
Ob	M Tram	21 26 31 36 41 46 51 56 01 06 11 16	22 32 42 52 02 12	26 41 56 11
F	Bahn S M Tram Bus	22 27 32 37 42 47 52 57 02 07 12 17	24 34 44 54 04 14	27 42 57 12
ULO	U5 Bus Bus	23 28 33 38 43 48 53 58 03 08 13 18	25 35 45 55 05 15	28 43 58 13
Mic	U2 M Bus	25 30 35 40 45 50 55 00 05 10 15 20	26 36 46 56 06 16	30 45 00 15
Ks	M	26 31 36 41 46 51 56 01 06 11 16 21	27 37 47 57 07 17	31 46 01 16
Hu	U1 U3 M Bus Bus	27 32 37 42 47 52 57 02 07 12 17 22	29 39 49 59 09 19	32 47 02 17
Me	U7 M Bus Bus	29 34 39 44 49 54 59 04 09 14 19 24	31 41 51 01 11 21	34 49 04 19
PL	M Bus Bus	31 36 41 46 51 56 01 06 11 16 21 26	33 43 53 03 13 23	36 51 06 21
Ps		32 37 42 47 52 57 02 07 12 17 22 27	34 44 54 04 14 24	37 52 07 22
Ts	S Bus Bus	34 39 44 49 54 59 04 09 14 19 24 29	36 46 56 06 16 26	39 54 09 24
At	M Bus Bus	35 40 45 50 55 00 05 10 15 20 25 30	37 47 57 07 17 27	40 55 10 25
Ka	Bus	36 41 46 51 56 01 06 11 16 21 26 31	38 48 58 08 18 28	41 56 11 26
Ull	Bus	37 42 47 52 57 02 07 12 17 22 27 32	39 49 59 09 19 29	42 57 12 27
Wl	Bus	39 44 49 54 59 04 09 14 19 24 29 34	41 51 01 11 21 31	44 59 14 29
Mf	M X Bus Bus	40 45 50 55 00 05 10 15 20 25 30 35	42 52 02 12 22 32	45 00 15 30

U6 → Tegel		(tagsüber)	(früh/abends)	(nachts)
Mf	M X Bus Bus	01 06 11 16 21 26 31 36 41 46 51 56	06 16 26 36 46 56	13 28 43 58
Wl	Bus	02 07 12 17 22 27 32 37 42 47 52 57	07 17 27 37 47 57	14 29 44 59
Ull	Bus	03 08 13 18 23 28 33 38 43 48 53 58	09 19 29 39 49 59	15 30 45 00
Ka	Bus	05 10 15 20 25 30 35 40 45 50 55 00	10 20 30 40 50 00	17 32 47 02
At	M Bus Bus	06 11 16 21 26 31 36 41 46 51 56 01	11 21 31 41 51 01	18 33 48 03
Ts	S Bus Bus	07 12 17 22 27 32 37 42 47 52 57 02	13 23 33 43 53 03	19 34 49 04
Ps		09 14 19 24 29 34 39 44 49 54 59 04	14 24 34 44 54 04	21 36 51 06
PL	M Bus Bus	10 15 20 25 30 35 40 45 50 55 00 05	16 26 36 46 56 06	22 37 52 07
Me	U7 M Bus Bus	12 17 22 27 32 37 42 47 52 57 02 07	18 28 38 48 58 08	24 39 54 09
Hu	U1 U3 M Bus Bus	14 19 24 29 34 39 44 49 54 59 04 09	20 30 40 50 00 10	26 41 56 11
Ks	M	15 20 25 30 35 40 45 50 55 00 05 10	21 31 41 51 01 11	27 42 57 12
Mic	U2 M Bus	17 22 27 32 37 42 47 52 57 02 07 12	23 33 43 53 03 13	29 44 59 14
ULO	U5 Bus Bus	18 23 28 33 38 43 48 53 58 03 08 13	24 34 44 54 04 14	30 45 00 15
F	Bahn S M Tram Bus	19 24 29 34 39 44 49 54 59 04 09 14	25 35 45 55 05 15	31 46 01 16
Ob	M Tram	20 25 30 35 40 45 50 55 00 05 10 15	26 36 46 56 06 16	32 47 02 17
NA	M Tram Bus	22 27 32 37 42 47 52 57 02 07 12 17	28 38 48 58 08 18	34 49 04 19
Sk		23 28 33 38 43 48 53 58 03 08 13 18	29 39 49 59 09 19	35 50 05 20
Ri	M Bus Bus	24 29 34 39 44 49 54 59 04 09 14 19	30 40 50 00 10 20	36 51 06 21
We	S M Bus Bus	25 30 35 40 45 50 55 00 05 10 15 20	31 41 51 01 11 21	37 52 07 22
Lpo	U9 Bus Bus	27 32 37 42 47 52 57 02 07 12 17 22	35 45 55 05 15 25	40 55 10 25
Se	M Tram Bus Bus	28 33 38 43 48 53 58 03 08 13 18 23	36 46 56 06 16 26	41 56 11 26
Rb		30 35 40 45 50 55 00 05 10 15 20 25	38 48 58 08 18 28	43 58 13 28
Afr	Bus	31 36 41 46 51 56 01 06 11 16 21 26	39 49 59 09 19 29	45 00 15 30
Sch	M X Bus	32 37 42 47 52 57 02 07 12 17 22 27	40 50 00 10 20 30	46 01 16 31
Scha	Bus	34 39 44 49 54 59 04 09 14 19 24 29	42 52 02 12 22 32	47 02 17 32
OTI		35 40 45 50 55 00 05 10 15 20 25 30	43 53 03 13 23 33	49 04 19 34
Hh	X Bus Bus	36 41 46 51 56 01 06 11 16 21 26 31	44 54 04 14 24 34	50 05 20 35
Bk	Bus	38 43 48 53 58 03 08 13 18 23 28 33	46 56 06 16 26 36	51 06 21 36
Tg	Bus Bus	39 44 49 54 59 04 09 14 19 24 29 34	47 57 07 17 27 37	53 08 23 38

U8 → Hermannstr.		(Mo-Fr HVZ)	(Mo-Fr NVZ)	(früh/abends)	(nachts)
WIU	S M X Bus Bus	01 06 11 16 21 26 31 36 41 46 51 56	06 16 26 36 46 56	08 18 28 38 48 58	04 19 34 49
RR	X Bus	03 08 13 18 23 28 33 38 43 48 53 58	08 18 28 38 48 58	09 19 29 39 49 59	05 20 35 50
KB	S M X	05 10 15 20 25 30 35 40 45 50 55 00	10 20 30 40 50 00	11 21 31 41 51 01	07 22 37 52
LD	Bus	06 11 16 21 26 31 36 41 46 51 56 01	11 21 31 41 51 01	13 23 33 43 53 03	09 24 39 54
PB	Bus Bus	07 12 17 22 27 32 37 42 47 52 57 02	07 12 17 22 27 32 37 42 47 52 57 02	14 24 34 44 54 04	10 25 40 55
RE	Bus	09 14 19 24 29 34 39 44 49 54 59 04	09 14 19 24 29 34 39 44 49 54 59 04	15 25 35 45 55 05	11 26 41 56
FN	Bus	10 15 20 25 30 35 40 45 50 55 00 05	10 15 20 25 30 35 40 45 50 55 00 05	17 27 37 47 57 07	13 28 43 58
Olu	U9 M Tram Bus Bus	12 17 22 27 32 37 42 47 52 57 02 07	12 17 22 27 32 37 42 47 52 57 02 07	19 29 39 49 59 09	15 30 45 00
Pk	M	14 19 24 29 34 39 44 49 54 59 04 09	14 19 24 29 34 39 44 49 54 59 04 09	20 30 40 50 00 10	16 31 46 01
Gb	DB Bahn S Bus	15 20 25 30 35 40 45 50 55 00 05 10	15 20 25 30 35 40 45 50 55 00 05 10	22 32 42 52 02 12	18 33 48 03
Vo	Bus	17 22 27 32 37 42 47 52 57 02 07 12	17 22 27 32 37 42 47 52 57 02 07 12	23 33 43 53 03 13	19 34 49 04
B	M Bus	18 23 28 33 38 43 48 53 58 03 08 13	18 23 28 33 38 43 48 53 58 03 08 13	25 35 45 55 05 15	21 36 51 06
Ro	M Bus	20 25 30 35 40 45 50 55 00 05 10 15	20 25 30 35 40 45 50 55 00 05 10 15	26 36 46 56 06 16	22 37 52 07
W	Bus	21 26 31 36 41 46 51 56 01 06 11 16	21 26 31 36 41 46 51 56 01 06 11 16	28 38 48 58 08 18	24 39 54 09
Ap	Bahn S U2 U5 M Bus Bus	23 28 33 38 43 48 53 58 03 08 13 18	23 28 33 38 43 48 53 58 03 08 13 18	30 40 50 00 10 20	26 41 56 11
Jn	S Bus Bus	25 30 35 40 45 50 55 00 05 10 15 20	25 30 35 40 45 50 55 00 05 10 15 20	31 41 51 01 11 21	27 42 57 12
He	Bus Bus	26 31 36 41 46 51 56 01 06 11 16 21	26 31 36 41 46 51 56 01 06 11 16 21	33 43 53 03 13 23	29 44 59 14
Mr	M	28 33 38 43 48 53 58 03 08 13 18 23	28 33 38 43 48 53 58 03 08 13 18 23	34 44 54 04 14 24	30 45 00 15
Kbu	U1 U3 Bus	30 35 40 45 50 55 00 05 10 15 20 25	30 35 40 45 50 55 00 05 10 15 20 25	36 46 56 06 16 26	34 49 04 19
ST		31 36 41 46 51 56 01 06 11 16 21 26	31 36 41 46 51 56 01 06 11 16 21 26	38 48 58 08 18 28	35 50 05 20
Hpo	U7 M Bus Bus	33 38 43 48 53 58 03 08 13 18 23 28	33 38 43 48 53 58 03 08 13 18 23 28	40 50 00 10 20 30	37 52 07 22
Hpo	U7 M Bus Bus	33 38 43 48 53 58 03 08 13 18 23 28	33 38 43 48 53 58 03 08 13 18 23 28	40 50 00 10 20 30	40 55 10 25
Bo	M Bus	35 40 45 50 55 00 05 10 15 20 25 30	35 40 45 50 55 00 05 10 15 20 25 30	41 51 01 11 21 31	41 56 11 26
L		36 41 46 51 56 01 06 11 16 21 26 31	36 41 46 51 56 01 06 11 16 21 26 31	43 53 03 13 23 33	43 58 13 28
HMS	S M Bus Bus	37 42 47 52 57 02 07 12 17 22 27 32	37 42 47 52 57 02 07 12 17 22 27 32	44 54 04 14 24 34	44 59 14 29

U8 → Wittenau		(Mo-Fr HVZ)	(Mo-Fr NVZ)	(früh/abends)	(nachts)
HMS	S M Bus Bus	02 07 12 17 22 27 32 37 42 47 52 57	02 07 12 17 22 27 32 37 42 47 52 57	02 12 22 32 42 52	03 18 33 48
L		04 09 14 19 24 29 34 39 44 49 54 59	04 09 14 19 24 29 34 39 44 49 54 59	04 14 24 34 44 54	04 19 34 49
Bo	M Bus	05 10 15 20 25 30 35 40 45 50 55 00	05 10 15 20 25 30 35 40 45 50 55 00	05 15 25 35 45 55	06 21 36 51
Hpo	U7 M Bus Bus	07 12 17 22 27 32 37 42 47 52 57 02	07 12 17 22 27 32 37 42 47 52 57 02	07 17 27 37 47 57	07 22 37 52
ST		09 14 19 24 29 34 39 44 49 54 59 04	09 14 19 24 29 34 39 44 49 54 59 04	09 19 29 39 49 59	09 24 39 54
Kbu	U1 U3 Bus	11 16 21 26 31 36 41 46 51 56 01 06	11 16 21 26 31 36 41 46 51 56 01 06	11 21 31 41 51 01	11 26 41 56
Mr	M	13 18 23 28 33 38 43 48 53 58 03 08	13 18 23 28 33 38 43 48 53 58 03 08	13 23 33 43 53 03	13 28 43 58
He	Bus Bus	14 19 24 29 34 39 44 49 54 59 04 09	14 19 24 29 34 39 44 49 54 59 04 09	14 24 34 44 54 04	15 30 45 00
Jn	S Bus Bus	15 20 25 30 35 40 45 50 55 00 05 10	15 20 25 30 35 40 45 50 55 00 05 10	15 25 35 45 55 05	16 31 46 01
Ap	Bahn S U2 U5 M Bus Bus	17 22 27 32 37 42 47 52 57 02 07 12	17 22 27 32 37 42 47 52 57 02 07 12	17 27 37 47 57 07	18 33 48 03
W	Bus	19 24 29 34 39 44 49 54 59 04 09 14	19 24 29 34 39 44 49 54 59 04 09 14	19 29 39 49 59 09	19 34 49 04
Ro	M Bus	20 25 30 35 40 45 50 55 00 05 10 15	20 25 30 35 40 45 50 55 00 05 10 15	20 30 40 50 00 10	21 36 51 06
B	M Bus	22 27 32 37 42 47 52 57 02 07 12 17	22 27 32 37 42 47 52 57 02 07 12 17	22 32 42 52 02 12	22 37 52 07
Vo	Bus	23 28 33 38 43 48 53 58 03 08 13 18	23 28 33 38 43 48 53 58 03 08 13 18	23 33 43 53 03 13	24 39 54 09
Gb	DB Bahn S Bus	25 30 35 40 45 50 55 00 05 10 15 20	25 30 35 40 45 50 55 00 05 10 15 20	25 35 45 55 05 15	25 40 55 10
Pk	M	26 31 36 41 46 51 56 01 06 11 16 21	26 31 36 41 46 51 56 01 06 11 16 21	26 36 46 56 06 16	27 42 57 12
Olu	U9 M Tram Bus Bus	28 33 38 43 48 53 58 03 08 13 18 23	28 33 38 43 48 53 58 03 08 13 18 23	28 38 48 58 08 18	28 43 58 13
FN	Bus	30 35 40 45 50 55 00 05 10 15 20 25	30 35 40 45 50 55 00 05 10 15 20 25	30 40 50 00 10 20	30 45 00 15
RE	Bus	31 36 41 46 51 56 01 06 11 16 21 26	31 36 41 46 51 56 01 06 11 16 21 26	31 41 51 01 11 21	31 46 01 16
PB	Bus Bus	32 37 42 47 52 57 02 07 12 17 22 27	32 37 42 47 52 57 02 07 12 17 22 27	32 42 52 02 12 22	33 48 03 18
LD	Bus	34 39 44 49 54 59 04 09 14 19 24 29	34 44 54 04 14 24	34 44 54 04 14 24	34 49 04 19
KB	S M X	35 40 45 50 55 00 05 10 15 20 25 30	35 45 55 05 15 25	35 45 55 05 15 25	35 50 05 20
RR	X Bus	37 42 47 52 57 02 07 12 17 22 27 32	37 47 57 07 17 27	37 47 57 07 17 27	37 52 07 22
WIU	S M X Bus Bus	38 43 48 53 58 03 08 13 18 23 28 33	38 48 58 08 18 28	38 48 58 08 18 28	39 54 09 24

U9 → Rath.Steglitz		(Mo-Sa HVZ)	(Mo-Sa NVZ,So,Ferien)	(früh/abends)	(nachts)
Olo	U8 M Tram BUS BUS	02 – alle 4-5 min	01 06 11 16 21 26 31 36 41 46 51 56	01 11 21 31 41 51	01 16 31 46
Np	BUS	03 – alle 4-5 min	02 07 12 17 22 27 32 37 42 47 52 57	02 12 22 32 42 52	02 17 32 47
Lpu	U6 BUS BUS	05 – alle 4-5 min	03 08 13 18 23 28 33 38 43 48 53 58	03 13 23 33 43 53	04 19 34 49
Am	BUS	06 – alle 4-5 min	05 10 15 20 25 30 35 40 45 50 55 00	05 15 25 35 45 55	05 20 35 50
WF	S	08 – alle 4-5 min	06 11 16 21 26 31 36 41 46 51 56 01	06 16 26 36 46 56	07 22 37 52
Bi		09 – alle 4-5 min	07 12 17 22 27 32 37 42 47 52 57 02	07 17 27 37 47 57	08 23 38 53
Tm	M X BUS BUS	10 – alle 4-5 min	09 14 19 24 29 34 39 44 49 54 59 04	09 19 29 39 49 59	09 24 39 54
Ha	BUS BUS	12 – alle 4-5 min	10 15 20 25 30 35 40 45 50 55 00 05	10 20 30 40 50 00	11 26 41 56
Zu	Bahn S U2 M X BUS BUS	14 – alle 4-5 min	12 17 22 27 32 37 42 47 52 57 02 07	12 22 32 42 52 02	13 28 43 58
Zu	Bahn S U2 M X BUS BUS	14 – alle 4-5 min	12 17 22 27 32 37 42 47 52 57 02 07	12 22 32 42 52 02	15 30 45 00
Kfu	U1 M X BUS BUS	15 – alle 4-5 min	14 19 24 29 34 39 44 49 54 59 04 09	14 24 34 44 54 04	16 31 46 01
Snu	U3 BUS	16 – alle 4-5 min	15 20 25 30 35 40 45 50 55 00 05 10	15 25 35 45 55 05	17 32 47 02
Gt		17 – alle 4-5 min	16 21 26 31 36 41 46 51 56 01 06 11	16 26 36 46 56 06	18 33 48 03
Beo	U7 M BUS BUS	19 – alle 4-5 min	17 22 27 32 37 42 47 52 57 02 07 12	17 27 37 47 57 07	20 35 50 05
Bu	S BUS	20 – alle 4-5 min	19 24 29 34 39 44 49 54 59 04 09 14	19 29 39 49 59 09	21 36 51 06
Fw	BUS	22 – alle 4-5 min	20 25 30 35 40 45 50 55 00 05 10 15	20 30 40 50 00 10	23 38 53 08
Wsg	M X BUS BUS	23 – alle 4-5 min	21 26 31 36 41 46 51 56 01 06 11 16	21 31 41 51 01 11	24 39 54 09
Slu	M BUS	24 – alle 4-5 min	23 28 33 38 43 48 53 58 03 08 13 18	23 33 43 53 03 13	25 40 55 10
Rzu	S M X BUS	25 – alle 4-5 min	24 29 34 39 44 49 54 59 04 09 14 19	24 34 44 54 04 14	26 41 56 11

U9 → Osloer Str.		(Mo-Sa HVZ)	(Mo-Sa NVZ,So,Ferien)	(früh/abends)	(nachts)
Rzu	S M X BUS	00 – alle 4-5 min	01 06 11 16 21 26 31 36 41 46 51 56	01 11 21 31 41 51	01 16 31 46
Slo	M BUS	01 – alle 4-5 min	02 07 12 17 22 27 32 37 42 47 52 57	02 12 22 32 42 52	02 17 32 47
Wsg	M X BUS BUS	03 – alle 4-5 min	03 08 13 18 23 28 33 38 43 48 53 58	03 13 23 33 43 53	04 19 34 49
Fw	BUS	04 – alle 4-5 min	04 09 14 19 24 29 34 39 44 49 54 59	04 14 24 34 44 54	05 20 35 50
Bu	S BUS	05 – alle 4-5 min	06 11 16 21 26 31 36 41 46 51 56 01	06 16 26 36 46 56	06 21 36 51
Beo	U7 M BUS BUS	07 – alle 4-5 min	07 12 17 22 27 32 37 42 47 52 57 02	07 17 27 37 47 57	08 23 38 53
Gt		08 – alle 4-5 min	09 14 19 24 29 34 39 44 49 54 59 04	09 19 29 39 49 59	09 24 39 54
Snu	U3 BUS	09 – alle 4-5 min	10 15 20 25 30 35 40 45 50 55 00 05	10 20 30 40 50 00	10 25 40 55
Kfu	U1 M X BUS BUS	10 – alle 4-5 min	11 16 21 26 31 36 41 46 51 56 01 06	11 21 31 41 51 01	11 26 41 56
Zu	Bahn S U2 M X BUS BUS	12 – alle 4-5 min	12 17 22 27 32 37 42 47 52 57 02 07	12 22 32 42 52 02	13 28 43 58
Zu	Bahn S U2 M X BUS BUS	12 – alle 4-5 min	12 17 22 27 32 37 42 47 52 57 02 07	12 22 32 42 52 02	15 30 45 00
Ha	BUS BUS	14 – alle 4-5 min	14 19 24 29 34 39 44 49 54 59 04 09	14 24 34 44 54 04	17 32 47 02
Tm	M X BUS BUS	15 – alle 4-5 min	16 21 26 31 36 41 46 51 56 01 06 11	16 26 36 46 56 06	18 33 48 03
Bi		17 – alle 4-5 min	17 22 27 32 37 42 47 52 57 02 07 12	17 27 37 47 57 07	20 35 50 05
WF	S	18 – alle 4-5 min	18 23 28 33 38 43 48 53 58 03 08 13	18 28 38 48 58 08	21 36 51 06
Am	BUS	19 – alle 4-5 min	20 25 30 35 40 45 50 55 00 05 10 15	20 30 40 50 00 10	22 37 52 07
Lpu	U6 BUS BUS	21 – alle 4-5 min	21 26 31 36 41 46 51 56 01 06 11 16	21 31 41 51 01 11	24 39 54 09
Np	BUS	22 – alle 4-5 min	23 28 33 38 43 48 53 58 03 08 13 18	23 33 43 53 03 13	25 40 55 10
Olo	U8 M Tram BUS BUS	23 – alle 4-5 min	24 29 34 39 44 49 54 59 04 09 14 19	24 34 44 54 04 14	26 41 56 11

U7 → Rudow (tagsüber)			(früh/abends)	(nachts)
RSp	DB Bahn S M X BUS BUS	01 06 11 16 21 26 31 36 41 46 51 56	05 15 25 35 45 55	12 27 42 57
AS	X	02 07 12 17 22 27 32 37 42 47 52 57	06 16 26 36 46 56	13 28 43 58
Zi	X	04 09 14 19 24 29 34 39 44 49 54 59	07 17 27 37 47 57	15 30 45 00
Hs	X BUS BUS	06 11 16 21 26 31 36 41 46 51 56 01	09 19 29 39 49 59	17 32 47 02
P	BUS BUS	07 12 17 22 27 32 37 42 47 52 57 02	11 21 31 41 51 01	18 33 48 03
Rm	BUS BUS	09 14 19 24 29 34 39 44 49 54 59 04	12 22 32 42 52 02	20 35 50 05
Sie	BUS	10 15 20 25 30 35 40 45 50 55 00 05	14 24 34 44 54 04	21 36 51 06
Hl	BUS	12 17 22 27 32 37 42 47 52 57 02 07	15 25 35 45 55 05	23 38 53 08
JK	M X BUS	13 18 23 28 33 38 43 48 53 58 03 08	16 26 36 46 56 06	24 39 54 09
Jho	Bahn S M X BUS	14 19 24 29 34 39 44 49 54 59 04 09	18 28 38 48 58 08	25 40 55 10
Mp	M	16 21 26 31 36 41 46 51 56 01 06 11	19 29 39 49 59 09	27 42 57 12
Rw	M X	17 22 27 32 37 42 47 52 57 02 07 12	21 31 41 51 01 11	28 43 58 13
Bmu	U2	19 24 29 34 39 44 49 54 59 04 09 14	24 34 44 54 04 14	30 45 00 15
Wd	Bahn S M X BUS	20 25 30 35 40 45 50 55 00 05 10 15	25 35 45 55 05 15	31 46 01 16
Ad	M X BUS BUS	21 26 31 36 41 46 51 56 01 06 11 16	26 36 46 56 06 16	32 47 02 17
Kn	BUS	22 27 32 37 42 47 52 57 02 07 12 17	27 37 47 57 07 17	33 48 03 18
Fpu	U3 BUS BUS	24 29 34 39 44 49 54 59 04 09 14 19	29 39 49 59 09 19	35 50 05 20
Bli	BUS BUS	25 30 35 40 45 50 55 00 05 10 15 20	30 40 50 00 10 20	36 51 06 21
Beu	U9 M BUS BUS	26 31 36 41 46 51 56 01 06 11 16 21	31 41 51 01 11 21	39 54 09 24
Bpu	U4	28 33 38 43 48 53 58 03 08 13 18 23	33 43 53 03 13 23	41 56 11 26
Ei		29 34 39 44 49 54 59 04 09 14 19 24	34 44 54 04 14 24	42 57 12 27
Kt	M BUS	30 35 40 45 50 55 00 05 10 15 20 25	35 45 55 05 15 15	43 58 13 28
Y	S M	32 37 42 47 52 57 02 07 12 17 22 27	37 47 57 07 17 27	45 00 15 30
Mu	U1 U3	33 38 43 48 53 58 03 08 13 18 23 28	38 48 58 08 18 28	46 01 16 31
Me	U6 M BUS BUS	35 40 45 50 55 00 05 10 15 20 25 30	40 50 00 10 20 30	49 04 19 34
Gs	BUS	37 42 47 52 57 02 07 12 17 22 27 32	42 52 02 12 22 32	50 05 20 35
Sü		38 43 48 53 58 03 08 13 18 23 28 33	43 53 03 13 23 33	52 07 22 37
Hpu	U8 M BUS BUS	40 45 50 55 00 05 10 15 20 25 30 35	45 55 05 15 25 35	55 10 25 40
Rk	M BUS	42 47 52 57 02 07 12 17 22 27 32 37	47 57 07 17 27 37	56 11 26 41
KM		43 48 53 58 03 08 13 18 23 28 33 38	48 58 08 18 28 38	58 13 28 43
Nk	S BUS BUS	45 50 55 00 05 10 15 20 25 30 35 40	50 00 10 20 30 40	59 14 29 44
Gz	BUS	46 51 56 01 06 11 16 21 26 31 36 41	51 01 11 21 31 41	01 16 31 46
Bl	BUS	48 53 58 03 08 13 18 23 28 33 38 43	53 03 13 23 33 43	02 17 32 47
Pi	M	49 54 59 04 09 14 19 24 29 34 39 44	54 04 14 24 34 44	04 19 34 49
Br	M BUS	51 56 01 06 11 16 21 26 31 36 41 46	56 06 16 26 36 46	05 20 35 50
Jt	M X BUS	52 57 02 07 12 17 22 27 32 37 42 47	57 07 17 27 37 47	07 22 37 52
La	BUS	54 59 04 09 14 19 24 29 34 39 44 49	59 09 19 29 39 49	08 23 38 53
Wk		55 00 05 10 15 20 25 30 35 40 45 50	00 10 20 30 40 50	10 25 40 55
Zd	BUS	56 01 06 11 16 21 26 31 36 41 46 51	01 11 21 31 41 51	11 26 41 56
R	X BUS BUS	58 03 08 13 18 23 28 33 38 43 48 53	03 13 23 33 43 53	12 27 42 57

U7 → Spandau (tagsüber)			(früh/abends)	(nachts)
R	X BUS BUS	00 05 10 15 20 25 30 35 40 45 50 55	05 15 25 35 45 55	01 16 31 46
Zd	BUS	02 07 12 17 22 27 32 37 42 47 52 57	06 16 26 36 46 56	03 18 33 48
Wk		03 08 13 18 23 28 33 38 43 48 53 58	07 17 27 37 47 57	04 19 34 49
La	BUS	04 09 14 19 24 29 34 39 44 49 54 59	09 19 29 39 49 59	05 20 35 50
Jt	M X BUS	06 11 16 21 26 31 36 41 46 51 56 01	10 20 30 40 50 00	07 22 37 52
Br	M BUS	08 13 18 23 28 33 38 43 48 53 58 03	12 22 32 42 52 02	09 24 39 54
Pi	M	09 14 19 24 29 34 39 44 49 54 59 04	13 23 33 43 53 03	10 25 40 55
Bl	BUS	10 15 20 25 30 35 40 45 50 55 00 05	15 25 35 45 55 05	11 26 41 56
Gz	BUS	12 17 22 27 32 37 42 47 52 57 02 07	17 27 37 47 57 07	13 28 43 58
Nk	S BUS BUS	14 19 24 29 34 39 44 49 54 59 04 09	18 28 38 48 58 08	15 30 45 00
KM		15 20 25 30 35 40 45 50 55 00 05 10	20 30 40 50 00 10	16 31 46 01
Rk	M BUS	16 21 26 31 36 41 46 51 56 01 06 11	21 31 41 51 01 11	17 32 47 02
Hpu	U8 M BUS BUS	18 23 28 33 38 43 48 53 58 03 08 13	22 32 42 52 02 12	19 34 49 04
Sü		20 25 30 35 40 45 50 55 00 05 10 15	24 34 44 54 04 14	21 36 51 06
Gs	BUS	21 26 31 36 41 46 51 56 01 06 11 16	26 36 46 56 06 16	22 37 52 07
Me	U6 M BUS BUS	23 28 33 38 43 48 53 58 03 08 13 18	28 38 48 58 08 18	25 40 55 10
Mu	U1 U3	25 30 35 40 45 50 55 00 05 10 15 20	29 39 49 59 09 19	26 41 56 11
Y	S M	26 31 36 41 46 51 56 01 06 11 16 21	31 41 51 01 11 21	28 43 58 13
Kt	M BUS	28 33 38 43 48 53 58 03 08 13 18 23	32 42 52 02 12 22	29 44 59 14
Ei		29 34 39 44 49 54 59 04 09 14 19 24	34 44 54 04 14 24	31 46 01 16
Bpu	U4	30 35 40 45 50 55 00 05 10 15 20 25	35 45 55 05 15 25	32 47 02 17
Beu	U9 M BUS BUS	32 37 42 47 52 57 02 07 12 17 22 27	38 48 58 08 18 28	33 48 03 18
Bli	BUS BUS	33 38 43 48 53 58 03 08 13 18 23 28	39 49 59 09 19 29	34 49 04 19
Fpu	U3 BUS BUS	34 39 44 49 54 59 04 09 14 19 24 29	41 51 01 11 21 31	36 51 06 21
Kn	BUS	36 41 46 51 56 01 06 11 16 21 26 31	42 52 02 12 22 32	37 52 07 22
Ad	M X BUS BUS	37 42 47 52 57 02 07 12 17 22 27 32	43 53 03 13 23 33	38 53 08 23
Wd	Bahn S M X BUS	38 43 48 53 58 03 08 13 18 23 28 33	45 55 05 15 25 35	40 55 10 25
Bmu	U2	40 45 50 55 00 05 10 15 20 25 30 35	46 56 06 16 26 36	41 56 11 26
Rw	M X	41 46 51 56 01 06 11 16 21 26 31 36	47 57 07 17 27 37	42 57 12 27
Mp	M	43 48 53 58 03 08 13 18 23 28 33 38	49 59 09 19 29 39	44 59 14 29
Jhu	Bahn S M X BUS	44 49 54 59 04 09 14 19 24 29 34 39	50 00 10 20 30 40	45 00 15 30
JK	M X BUS	45 50 55 00 05 10 15 20 25 30 35 40	52 02 12 22 32 42	47 02 17 32
Hl	BUS	47 52 57 02 07 12 17 22 27 32 37 42	53 03 13 23 33 43	48 03 18 33
Sie	BUS	48 53 58 03 08 13 18 23 28 33 38 43	55 05 15 25 35 45	50 05 20 35
Rm	BUS BUS	49 54 59 04 09 14 19 24 29 34 39 44	56 06 16 26 36 46	51 06 21 36
P	BUS BUS	51 56 01 06 11 16 21 26 31 36 41 46	58 08 18 28 38 48	53 08 23 38
Hs	X BUS BUS	53 58 03 08 13 18 23 28 33 38 43 48	59 09 19 29 39 49	54 09 24 39
Zi	X	54 59 04 09 14 19 24 29 34 39 44 49	01 11 21 31 41 51	56 11 26 41
AS	X	56 01 06 11 16 21 26 31 36 41 46 51	02 12 22 32 42 52	57 12 27 42
RSp	DB Bahn S M X BUS BUS	57 02 07 12 17 22 27 32 37 42 47 52	03 13 23 33 43 53	58 13 28 43

N1 → S+U Zoologischer Garten					
BWRS/WA	M M10	11	25	41	55
S	BUS N65	14	28	44	58
Gr	M M29	18	32	48	02
Kbo/Kbu	N8	20	34	50	04
Pr		21	35	51	05
Ho/Hu	M M41 BUS N42	26	37	56	07
Mehringbr.	N6	26	40	56	10
Mo/Mu		27	41	57	11
MB	M M29	29	43	59	13
Pdmr. Br.	N2 M M29 M48	30	44	00	14
Kus	N2 M M48	32	46	02	16
Bs	N2 M M19 M48	33	47	03	17
No/Nm/Nu	N2 M M19 BUS N26	34	48	04	18
Wt	N2 N3 M M19 M29 M46 BUS N26	37	51	07	21
Kfo/Kfu	N2 N3 N9 M M19 M29 M46 BUS N10 N26 N7X		54		24
BZOS/Zo/Zu	N2 N9 M M45 M46 M49 BUS N10 N26 N7X		56		26

N1 → S+U Warschauer Straße					
BZOS/Zo/Zu	N2 N9 M M45 M46 M49 BUS N10 N26 N7X	00		30	
Kfo/Kfu	N2 N3 N9 M M19 M29 M46 BUS N10 N26 N7X	02		32	
Wt	N2 N3 M M19 M29 M46 BUS N26	05	21	35	51
No/Nm/Nu	N2 M M19 BUS N26	08	24	38	54
Bs	N2 M M19 M48	09	25	39	55
Kus	N2 M M48	10	26	40	56
Pdmr. Br.	N2 M M29 M48	12	28	42	58
MB	M M29	13	29	43	59
Mo/Mu		15	31	45	01
Mehringbr.	N6	16	32	46	02
Ho/Hu	M M41 BUS N42	17	33	47	03
Pr		19	35	49	05
Kbo/Kbu	N8	20	36	50	06
Gr	M M29	22	38	52	08
S	BUS N60 N65	25	41	55	11
BWRS/WA	M M10	28	44	58	14

N3 → S Mexikoplatz			
Wt	N1 N2 M M19 M29 M46 BUS N26	14	44
Kfo/Kfu	N1 N2 N9 M M19 M29 M46 BUS N10 N26 N7X	17	47
Sno/Snu	N9 BUS N7X	20	50
Hz		21	51
Fpo/Fpu	N7 BUS N42	23	53
BHO	BUS N10	25	55
BHEI/Hb		27	57
Wiesbad. Str.		30	00
Bt		32	02
Rohlfsstr.		33	03
Dd	M M11	36	06
T		38	08
Os (Arg.A.)	BUS N10	42	12
Onk.-Tom-Str.		44	14
K		46	16
BMEX		48	18

N3 → U Wittenbergplatz

BMEX		20 50
K		22 52
Onk.-Tom-Str.		24 54
Os (Arg.A.)	N10	26 56
T		28 58
Dd	M11	30 00
Rohlfsstr.		32 02
Bt		34 04
Wiesbad. Str.		36 06
BHEI/Hb		39 09
BHO	N10	41 11
Fpo/Fpu	N7 N42	47 17
Hz		49 19
Sno/Snu	N9 N7X	50 20
Kfo/Kfu	N1 N2 N9 M19 M29 M46 N10 N26 N7X	52 22
Wt	N1 N2 M19 M29 M46 N26	55 25

N7X → BER (Mo-Fr)

BZOS/Zo/Zu	N1 N2 N3 N9 M45 M46 M49 N10 N26	02:31 02:46 03:01 03:16 03:31 03:46
Kfo/Kfu	N1 N2 N3 N9 M19 M29 M46 N10 N26	02:33 02:48 03:03 03:18 03:33 03:48
Sno/Snu	N3 N9	02:36 02:51 03:06 03:21 03:36 03:51
Gt	N9	02:37 02:52 03:07 03:22 03:37 03:52
Beo/Beu	N7 N9 N42	02:39 02:54 03:09 03:24 03:39 03:54
BSGR/BSGV	M46	02:44 02:59 03:14 03:29 03:44 03:59
At	N6 M46 N84	02:50 03:05 03:20 03:35 03:50 04:05
BFLH ✈	N7 N60	03:10 03:25 03:40 03:55 04:10 04:25
BFBB ✈	N7 N36 N60	03:19 03:34 03:49 04:04 04:19 04:34

N2 → U Ruhleben

BPKW/PA	M1 M27 N50	26	56
VIN	M1	29	59
Bornh.Str.	M1 M13	31	01
BSAL/Sh	M1	32	02
EB	M1 M10	35	05
Sz		38	08
Lu		40	10
BALX (Memh.)	N5 N8 M2 M4 M5 N40 N42 N60 N65	43	13
BALX (Memh.)	N5 N8 M2 M4 M5 N40 N42 N60 N65	30 45 00	15
Marienkirche	N5 N8 M4 M5 N40 N42 N60 N65	31 46 01	16
RHO	N8 N40 N42 N60 N65	32 47 02	17
Sp	N42	35 50 05	20
Jerus. Str.		36 51 06	21
Mi/Mic	N6	37 52 07	22
Wilhelmstr.	M48	38 53 08	23
BPOP/Pd	M41 M48	39 54 09	24
BPOP/Pd	M41 M48	42 57 12	27
Pdmr. Br.	N1 M29 M48	45 00 15	30
Kus	N1 M48	47 02 17	32
Bs	N1 M19 M48	48 03 18	33
No/Nm/Nu	N1 M19 N26	49 04 19	34
Wt	N1 N3 M19 M29 M46 N26	52 07 22	37
Kfo/Kfu	N1 N3 N9 M19 M29 M46 N10 N26 N7X	55 10 25	40
BZOS/Zo/Zu	N1 N9 M45 M46 M49 N10 N26 N7X	56 11 26	41
BZOS/Zo/Zu	N1 N9 M45 M46 M49 N10 N26 N7X	15	45
RP	M45	18	48
Obi		20	50
Bmo/Bmu	N7	24	54
So		26	56
Kd		27	57
Th	M49 N42	30	00
Nd		32	02
Rl	M45	36	06

N2 → S+U Pankow

Rl	M45	21	51
Nd		25	55
Th (Süd)	M49 N42	27	57
Kd		28	58
So		30	00
Bmo/Bmu	N7	33	03
Obi		35	05
RP	M45	37	07
BZOS/Zo/Zu	N1 N9 M45 M46 M49 N10 N26	43	13
BZOS/Zo/Zu	N1 N9 M45 M46 M49 N10 N26	30 45 00	15
Kfo/Kfu	N1 N3 N9 M19 M29 M46 N10 N26 N7X	32 47 02	17
Wt	N1 N3 M19 M29 M46 N26	35 50 05	20
No/Nm/Nu	N1 M19 N26	38 53 08	23
Bs	N1 M19 M48	39 54 09	24
Kus	N1 M48	40 55 10	25
Pdmr. Br.	N1 M29 M48	42 57 12	27
BPOP/Pd	M41 M48	45 00 15	30
Wilhelmstr.	M48	46 01 16	31
Mi/Mic	N6	47 02 17	32
Jerus. Str.		49 04 19	34
Sp	N42	50 05 20	35
RHO	N8 N40 N42 N60 N65	52 07 22	37
Marienkirche	N5 N8 M4 M5 N40 N42 N60 N65	53 08 23	38
BALX (Memh.)	N5 N8 M2 M4 M5 N40 N42 N60 N65	10	40
BALX (Memh.)	N5 N8 M2 M4 M5 N40 N42 N60 N65	15	45
Lu		19	49
Sz		21	51
EB	M1 M10	24	54
BSAL/Sh	M1	27	57
Bornh. Str.	M1 M13	28	58
VIN	M1	30	00
BPKW/PA	M1 M27 N50	33	03

N6 → U Alt-Mariendorf

Tg	N22 N24 N25 N33	07 37
Bk		09 39
Hh	N33	11 41
Otisstraße		13 43
Scha		15 45
Sch	M21	18 48
Afr		21 51
Rb		22 52
Se	M13 N20 N26	25 55
Lpo/Lpu	N9 N20	28 58
BWED/We	N20	29 59
Ri	M27 N20	31 01
Sk		33 03
NA	M10 N40	35 05
Ob (Torstr)		36 06
Ob	M1	37 07
BFST/BFSTT/F	M1	38 08
ULO/ULU		40 10
Mic	N2	41 11
Ks	M29	43 13
Mehringbr.	N1	50 20
Me	N7 M19 N42	53 23
Me	N7 M19 N42	58 28
PL	N42	59 29
Ps		01 31
BTHF/Ts	N84	02 32
Ts (Ringb.)	N84	03 33
At	M46 N84 N7X	04 34
Ka		06 36
Ull		08 38
Wl		10 40
Mf (Alt-M'df)	M76 M77 N79	12 42
Mf (Reißeck)	M76 M77 N79	13 43

N6 → U Alt-Tegel

Mf (Reißeck)	M76 M77 N79	14 44
Mf (Alt-M'df)	M76 M77 N79	16 46
Wl		17 47
Ull		19 49
Ka		21 51
At	M46 N84 N7X	24 54
Ts (Ringb)	N84	25 55
BTHF/Ts	N84	26 56
Ps		28 58
PL	N42	29 59
Me	N7 M19 N42	36 06
Mehringbr.	N1	39 09
Ks	M29	42 12
Mic	N2	44 14
ULO/ULU		46 16
BFST/BFSTT/F	M1	48 18
Ob	M1	50 20
Ob (Torstr)		51 21
NA	M10 N40	52 22
Sk		53 23
Ri	M27 N20	55 25
BWED/WE	N20	56 26
Lpo/Lpu	N9 N20	58 28
Lpo/Lpu	N9 N20	02 32
Se	M13 N20 N26	04 34
Rb		08 38
Afr		09 39
Sch	M21	13 43
Scha		17 47
Otisstraße		18 48
Hh	N33	20 50
Bk		22 52
Tg	N22 N24 N25 N33	24 54

N8 → S+U Hermannstraße

Wilhelmsr. D.	N24 N53	21 51
BWIN/WIU	M21 N24	25 55
WIU (U)	M21 N24	26 56
RR (Eichb.)		28 58
BKBO/KB	M21	31 01
LD		33 03
PB	N20	35 05
PB (Aros.A.)	N20	36 06
RE		38 08
FN		40 10
Olu (Troms.)	N9 M13 N52	42 12
Olu (Troms.)	N9 M13 N52	44 14
Pk	M27	47 17
BGB/Gb		49 19
Vo		52 22
B	M10	53 23
Ro	M1 N40	55 25
W (Gipsstr)	M1 N40 N42 N65	56 26
BALX (Memh.)	N2 N5 M2 M4 M5 N40 N42 N60 N65	58 28
BALX (Memh.)	N2 N5 M2 M4 M5 N40 N42 N60 N65	00 30
RHO	N2 N40 N42 N60 N65	02 32
BJB/Jn	N40 N60 N65	04 34
He	N60 N65	06 36
Mr	M29	08 38
Kbu (Adalb)	N1	12 42
ST		15 45
Hpo/Hpu (W)	N7 M29 M41 N94	16 46
Hpo/Hpu (W)	N7 M29 M41 N94	18 48
Bo		19 49
L		21 51
HMS	M44 N79	23 53

N8 → Wilhelmsruher Damm

HMS	M44 N79	02 32
L		04 34
Bo		06 36
Hpo/Hpu (O)	N7 M29 M41 N94	09 39
Hpo/Hpu (O)	N7 M29 M41 N94	12 42
ST		14 44
Kbu (Adalb)	N1	17 47
Mr	M29	20 50
He	N60 N65	22 52
BJB/Jn	N40 N60 N65	23 53
RHO	N2 N40 N42 N60 N65	24 54
Marienkirche	N2 N5 M4 M5 N40 N42 N60 N65	25 55
W	N2 N5 M1 N40 N42 N65	31 01
Ro	M1 N40	32 02
B	M10 N40	35 05
Vo		36 06
BGB/Gb		38 08
Pk	M27	40 10
Olo/Olu	N9 M13 N52	44 14
FN		46 16
RE		48 18
PB	N20	51 21
LD		53 23
KB	M21	55 25
RR (Eichb)		58 28
BWIN/WIU	M21 N24	01 31
Wilhelmsr. D.	N24 N53	07 37

N5 → S+U Hauptbahnhof

Riesaer Str.	M6 N95	11	41
Hö		14	44
LL		15	45
Hd	M6	19	49
C		21	51
GK		23	53
KL	N91	26	56
BWT/Wh	N69 N90 N91 N95	29	59
BWT/Wh	N69 N90 N91 N95	31 46 01	16
Alt-Biesdorf		34 49 04	19
Rhinstr.	M17	39 54 09	24
R.-Uhrig-Str.		40 55 10	25
Lbg.Br.(Nord)	N50 N94	41 56 11	26
Md (Atzp.)	N50 N56 N94	42 57 12	27
Md (Atzp.)	N50 N56 N94	44 57 14	27
BFA/Ff	M13	46 59 16	29
Sa		48 01 18	31
Ft	M10	49 02 19	32
WR		51 04 21	34
Sr		53 06 23	36
Si		55 08 25	38
A/Al/Ap (U)	M4 M5 N60 N65	56 09 26	39
BALX (Memh.s)	N2 N8 M2 M4 M5 N40 N42 N60 N65	58 11 28	41
BALX (Memh.s)	N2 N8 M2 M4 M5 N40 N42 N60 N65	00	30
Marienkirche	M4 M5 N2 N8 N40 N42 N60 N65	01	31
MUI		03	33
ULO/ULU	N6	05	35
BTOR/BRT		06	36
BHBF/HBF	M10 M41 N20 N40	13	43

N5 → Riesaer Straße

BHBF/HBF	M M10 M M41 N20 N40	13 43
BTOR/BRT		19 49
ULO/ULU	N6	21 51
MUI		23 53
Marienkirche	N2 N8 M M4 M5 N40 N42 N60 N65	25 55
BALX (Memh.s)	N2 N8 M M2 M4 M5 N40 N42 N60 N65	26 56
BALX (Memh.s)	N2 N8 M M2 M4 M5 N40 N42 N60 N65	30 47 00 17
A/Al/Ap (U)	M M4 M5 N60 N65	32 49 02 19
Si		34 51 04 21
Sr		36 53 06 23
WR		38 55 08 25
Ft	M M10	40 57 10 27
Sa		42 59 12 29
Ff	M M13	44 01 14 31
Md (Atzp.)	N50 N56 N94	46 03 16 33
Md (Atzp.)	N50 N56 N94	48 03 18 33
Lbg.Br. (Süd)	N50 N94	49 04 19 34
R.-Uhrig-Str.		51 06 21 36
Rhinstr.	M M17	52 07 22 37
Alt-Biesdorf		57 12 27 42
BWT/Wh	N69 N90 N91 N95	01 16 31 46
KL	N91	05 35
GK		07 37
C		09 39
Hd	M M6	11 41
LL		15 45
Hö		16 46
Riesaer Str.	M M6 N95	18 48

N7 → Flughafen Schönefeld

			WE
BSPA (Seegef)	M M32 M37 M45 N30 N34	07 37	
RSp (Altst)	M M32 M37 M45 N30 N34	08 38	
AS		10 40	
Zi		11 41	
Hs	N33	13 43	
P	N39	15 45	
Rm	N23 N39	17 47	
Sie		19 49	
Halemweg		21 51	
JK (West)	M M21	24 54	
BJUN (Dohrn)	M M21 M27	26 56	
Mp (Meitner)	M M27	28 58	
Rw	M M45	30 00	
Bmo/Bmu	N2	32 02	
Ks-Friedr.-S.	M M49	34 04	
BCHS		35 05	
Ad (Brandb.)	M M19 M29 N10	37 07	
Ad (Brandb.)	M M19 M29 N10	40 10	
Kn		43 13	
Fpo/Fpu	N3 N42	44 14	
Bli (Uhland)	N42	46 16	
Beo/Beu (Bln)	N9 N42	48 18	
Beo/Beu (Bln)	N9 N42	53 23	
Bpo/Bpu		54 24	
Grunewaldstr.	M M46	54 24	
Ei		55 25	
Kt	M M48	57 27	
BGGS/Y	M M19	59 29	
BYOR/Y	M M19	00 30	
Großbeerenstr	M M19	02 32	
Me	N6 M M19 N42	03 33	
Gs		05 35	
Sü		08 38	
Hpo/Hpu (O)	N8 M M29 M41 N94	11 41	
Hpo/Hpu (O)	N8 M M29 M41 N94	13 43	
Hpo/Hpu (W)	N8 M M29 M41 N94	14 44	
Hpo/Hpu (W)	N8 M M29 M41 N94	18 48	
Rk	N94	21 51	
BNK/Nk	N79	28 58	
Nk (Lahnstr)	N79	29 59	
Gz		30 00	
Gz (Jahnstr)		31 01	
Buschkrug		33 03	
Parchim. All.	M M46	35 05	
Gutschmidtstr		38 08	
Johann. Ch.	M M11	40 10	
Lipschitzall.	M M11	42 12	
Wutzkyallee	M M11	43 13	
Zwickauer D.	M M11	44 14	
R		47 17	47 02 17 32
BFLH ✈	N60 N7X	53 23	53 08 23 38
BFBB ✈	N36 N60 N7X	05 35	05 20 35 50

N7 → S+U Rathaus Spandau

			WE
BFBB ✈	N36 N60 N7X	23 53	03 18 33 48
BFLH ✈	N60 N7X	37 07	17 32 47 02
R		45 15	25 40 55 10
Zwickauer D.	M M11	48 18	
Wutzkyallee	M M11	49 19	
Lipschitzall.	M M11	50 20	
Johann. Ch.	M M11	52 22	
Gutschmidtstr		54 24	
Parchim. All.	M M46	57 27	
Buschkrug		59 29	
Gz (Jahnstr)		01 31	
Gz		02 32	
Nk (Lahnstr)		03 33	
BNK/Nk	N79	04 34	
KM		06 36	
Rk	N94	08 38	
Hpo/Hpu (O)	N8 M M29 M41 N94	10 40	
Hpo/Hpu (O)	N8 M M29 M41 N94	13 43	
Hpo/Hpu (W)	N8 M M29 M41 N94	14 44	
Hpo/Hpu (W)	N8 M M29 M41 N94	18 48	
Sü		21 51	
Gs		24 54	
Me	N6 M M19 N42	26 56	
Großbeerenstr	M M19	27 57	
BYOR/Y	M M19	29 59	
BGGS/Y	M M19	30 00	
Kt	M M48	32 02	
Ei		34 04	
Grunewaldstr.	M M46	35 05	
Bpo/Bpu		35 05	
Beo/Beu	N9 N42	37 37	
Bli (Uhland)	N42	39 09	
Bli	N42	40 10	
Fpo/Fpu	N3 N42	41 11	
Fpo/Fpu	N3 N42	44 14	
Kn		45 15	
Ad	M M19 M29 N10	47 17	
BCHS		48 18	
Ks-Friedr.-S.	M M49	49 19	
Bmo/Bmu	N2	52 22	
Rw	M M45	54 24	
Mp (Osnabr)	M M27	56 26	
BJUN (Olbers)	M M21 M27	58 28	
BJUN (Teg.W.)	M M27	59 29	
JK (Ost)	M M21	00 30	
Halemweg		03 33	
Sie		05 35	
Rm	N23 N39	07 37	
P	N39	09 39	
Hs	N33	11 41	
Hs	N33	14 44	
Zi		16 46	
AS		17 47	
RSp (Altst)	M M32 M37 M45 N30 N34	20 50	

N9 → S+U Rathaus Steglitz

Olo/Olu	N8 M M13 N52	06 21 36 51
Np		09 24 39 54
Lpo/Lpu	N6 N20	11 26 41 56
Lpo/Lpu	N6 N20	11 29 41 59
Am		13 31 43 01
BWF/WF		15 33 45 03
Bi		16 34 46 04
Tm (Stromstr)	M M27 N40	17 35 47 05
Tm (Stromstr)	M M27 N40	19 35 49 05
Bachstraße		21 37 51 07
BTGN		22 38 52 08
BZOS/Zo/Zu	N1 N2 M M45 M46 M49 N10 N26 N7X	26 42 56 12
BZOS/Zo/Zu	N1 N2 M M45 M46 M49 N10 N26 N7X	45 15
Kfo/Kfu	N1 N2 N3 M M19 M29 M46 N10 N26 N7X	47 17
Sno/Snu	N3 N7X	50 20
Gt	N7X	51 21
Beo/Beu	N7 N42 N7X	53 23
BBUP/Bu		56 26
Fw		58 28
Wsg	M M48 M76 N81	01 31
Slo/Slu	M M48	02 32
BRST/Rzu	M M48 M82 M85 N88	05 35

N9 → U Osloer Straße

BRST/Rzu	M M48 M82 M85 N88	28 58
Slo/Slu	M M48	30 00
Wsg	M M48 M76 N81	32 02
Fw		34 04
BBUP/Bu		35 05
Beo/Beu	N7 N42 N7X	38 08
Gt	N7X	40 10
Sno/Snu	N3 N7X	41 11
Kfo/Kfu	N1 N2 N3 M M19 M29 M46 N10 N26 N7X	43 13
BZOS (Jebens)	N1 N2 M M45 M46 M49 N10 N26 N7X	44 14
BZOS (Jebens)	N1 N2 M M45 M46 M49 N10 N26 N7X	30 45 00 15
BTGN		33 48 03 18
Bachstraße		34 49 04 19
Tm (Stromstr)	M M27 N40	37 52 07 22
Bi		39 54 09 24
BWF/WF		40 55 10 25
Am		42 57 12 27
Lpo/Lpu	N6 N20	45 00 15 30
Lpo/Lpu	N6 N20	45 02 15 32
Np		47 04 17 34
Olo/Olu	N8 M M13 N52	50 07 20 37

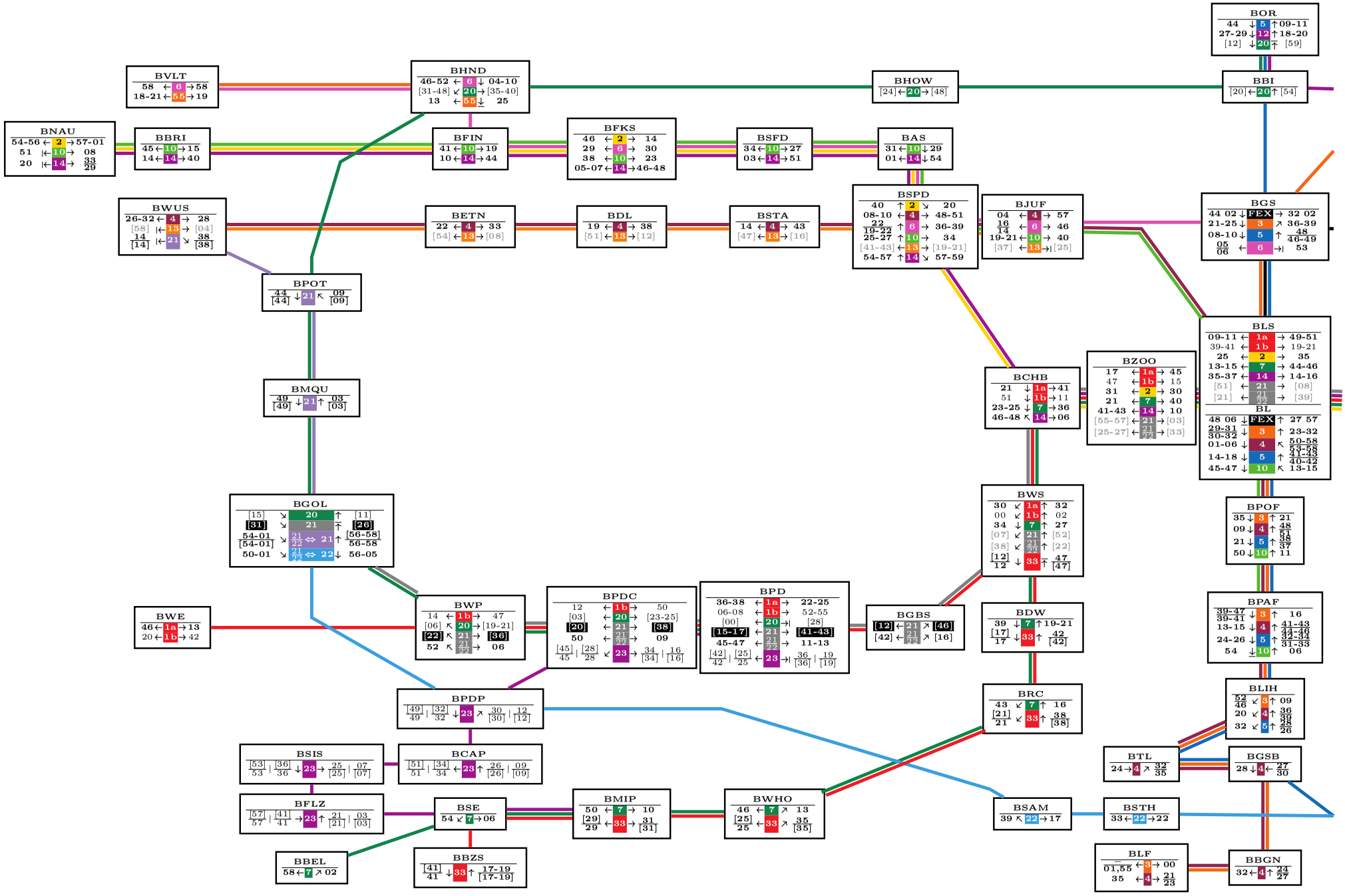
BOR
44 ↓ 5 ↑ 09-11
27-29 ↓ 12 ↑ 18-20
[12] ↓ 20 ↑ [59]
BVLT
58 ← 6 → 58
18-21 ← 55 → 19
BHND
46-52 ← 6 ↓ 04-10
[31-48] ↙ 20 → [35-40]
13 ← 55 ↓ 25
BHOW
[24] ← 20 → [48]
BBI
[20] ← 20 ↑ [54]
BNAU
54-56 ← 2 → 57-01
51 |← 10 → 08
20 |← 14 → 33/29
BBRI
45 ← 10 → 15
14 ← 14 → 40
BFIN
41 ← 10 → 19
10 ← 14 → 44
BFKS
46 ← 2 → 14
29 ← 6 → 30
38 ← 10 → 23
05-07 ← 14 → 46-48
BSFD
34 ← 10 → 27
03 ← 14 → 51
BAS
31 ← 10 ↓ 29
01 ← 14 ↓ 54
BWUS
26-32 ← 4 → 28
[58] |← 13 → [04]
14/[14] |← 21 ↘ 38/[38]
BETN
22 ← 4 → 33
[54] ← 13 → [08]
BDL
19 ← 4 → 38
[51] ← 13 → [12]
BSTA
14 ← 4 → 43
[47] ← 13 → [16]
BSPD
40 ↑ 2 ↘ 20
08-10 ← 4 → 48-51
22/19-22 ↑ 6 → 36-39
25-27 ↑ 10 → 34
[41-43] ← 13 → [19-21]
54-57 ↑ 14 ↘ 57-59
BJUF
04 ← 4 → 57
16/14 ← 6 → 46
19-21 ← 10 → 40
[37] ← 13 →| [25]
BGS
44 02 ↓ FEX → 32 02
21-25 ↓ 3 ↗ 36-39
08-10 ↓ 5 ↑ 48/46-49
05/06 ← 6 →| 53
BPOT
44/[44] ↓ 21 ↖ 09/[09]
BLS
09-11 ← 1a → 49-51
39-41 ← 1b → 19-21
25 ← 2 → 35
13-15 ← 7 → 44-46
35-37 ← 14 → 14-16
[51] ← 21 → [08]
[21] ← 21/22 → [39]
BL
48 06 ↓ FEX ↑ 27 57
29-31/30-32 ↓ 3 ↑ 23-32
01-06 ↓ 4 ↖ 50-58/53-58
14-18 ↓ 5 ↑ 41-43/40-42
45-47 ↓ 10 ↖ 13-15
BZOO
17 ← 1a → 45
47 ← 1b → 15
31 ← 2 → 30
21 ← 7 → 40
41-43 ← 14 → 10
[55-57] ← 21 → [03]
[25-27] ← 21/22 → [33]
BCHB
21 ↓ 1a → 41
51 ↓ 1b → 11
23-25 ↓ 7 → 36
46-48 ↖ 14 → 06
BMQU
49/[49] ↓ 21 ↑ 03/[03]
BGOL
[15] ↘ 20 ↑ [11]
[31] ↘ 21 ↑ [26]
54-01/[54-01] ↘ 21/22 ⇔ 21 ↑ [56-58]/56-58
50-01 ↘ 21/22 ⇔ 22 ↓ 56-05
BWS
30 ↙ 1a ↑ 32
00 ↙ 1b ↑ 02
34 ↓ 7 ↑ 27
[07] ↙ 21 ↑ [52]
[38] ↙ 21/22 ↑ [22]
[12]/12 ↓ 33 ↑ 47/[47]
BPOF
35 ↓ 3 ↑ 21
09 ↓ 4 ↑ 48/51
21 ↓ 5 ↑ 38/37
50 ↓ 10 ↑ 11
BWE
46 ← 1a → 13
20 ← 1b → 42
BWP
14 ← 1b → 47
[06] ↖ 20 → [19-21]
[22] ↖ 21 → [36]
52 ↖ 21/22 → 06
BPDC
12 ← 1b → 50
[03] ← 20 → [23-25]
[20] ← 21 → [38]
50 ← 21/22 → 09
[45]/45 | [28]/28 ↙ 23 → 34/[34] | 16/[16]
BPD
36-38 ← 1a → 22-25
06-08 ← 1b → 52-55
[00] ← 20 →| [28]
[15-17] ← 21 → [41-43]
45-47 ← 21/22 → 11-13
[42]/42 | [25]/25 ← 23 →| 36/[36] | 19/[19]
BGBS
[12] ← 21 ↗ [46]
[42] ← 21/22 ↗ [16]
BDW
39 ↓ 7 ↑ 19-21
[17]/17 ↓ 33 ↑ 42/[42]
BPAF
39-47/39-41 ↓ 3 ↑ 16
13-15 ↓ 4 ↑ 41-43/32-39
24-26 ↓ 5 ↑ 32-34/31-33
54 ↓ 10 ↑ 06
BPDP
[49]/49 | [32]/32 ↓ 23 ↗ 30/[30] | 12/[12]
BRC
43 ↙ 7 ↑ 16
[21]/21 ↙ 33 ↑ 38/[38]
BLIH
52/46 ↙ 3 ↑ 09
20 ↙ 4 ↑ 36/39
32 ↙ 5 ↑ 28/26
BSIS
[53]/53 | [36]/36 ↓ 23 → 25/[25] | 07/[07]
BCAP
[51]/51 | [34]/34 ← 23 ↑ 26/[26] | 09/[09]
BTL
24 → 4 ↗ 32/35
BGSB
28 ↓ 4 ← 27/30
BFLZ
[57]/57 | [41]/41 → 23 ↑ 21/[21] | 03/[03]
BSE
54 ↙ 7 → 06
BMIP
50 ← 7 → 10
[29]/29 ← 33 → 31/[31]
BWHO
46 ← 7 ↗ 13
[25]/25 ← 33 ↗ 35/[35]
BSAM
39 ↖ 22 → 17
BSTH
33 ← 22 → 22
BBEL
58 ← 7 ↗ 02
BBZS
[41]/41 ↓ 33 ↑ 17-19/[17-19]
BLF
–/01,55 ← 3 → 00
35 ← 4 → 21/23
BBGN
32 ← 4 ↑ 24/27

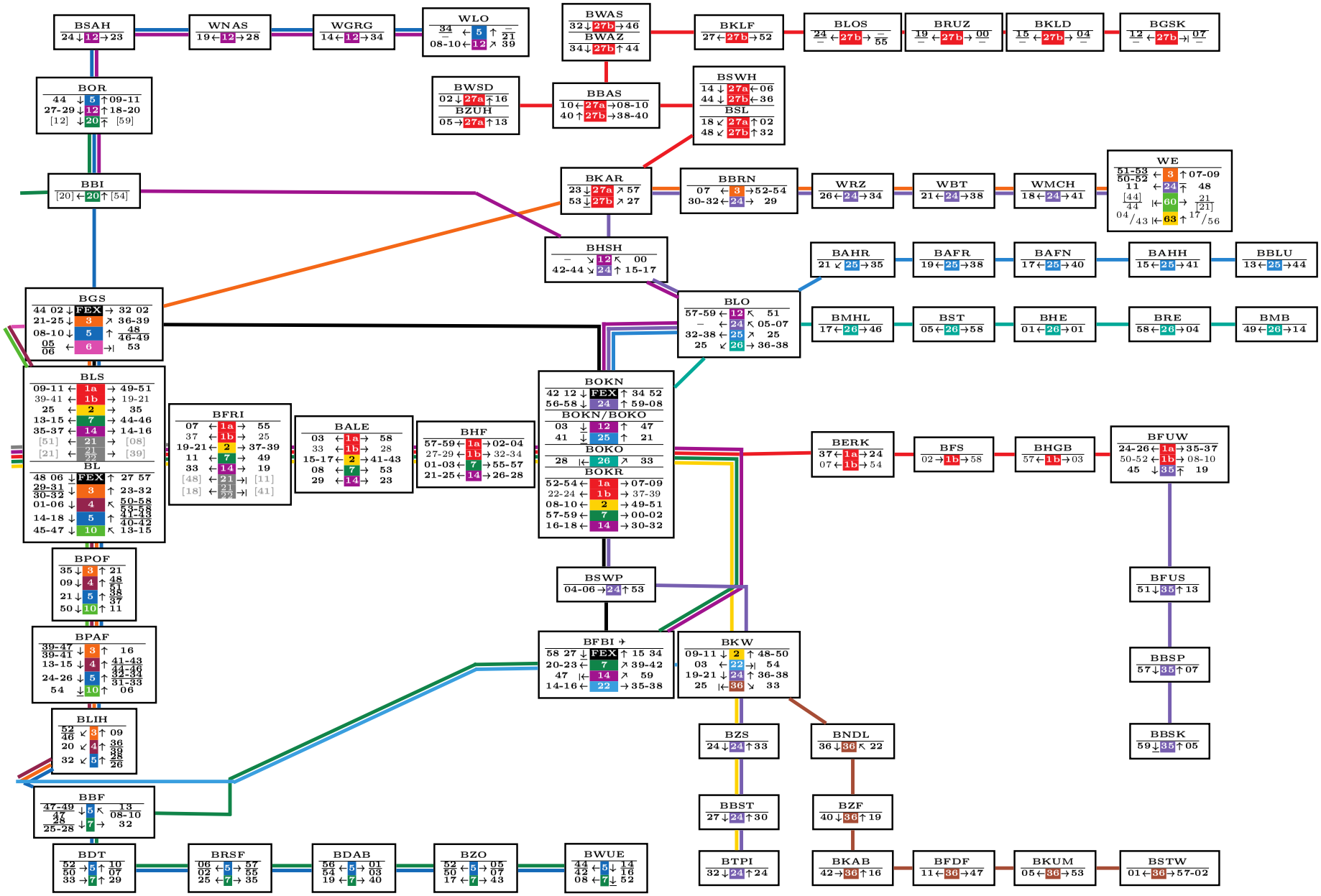
BSAH
24↓12→23
WNAS
19←12→28
WGRG
14←12→34
WLO
34 ← 5 ↑ —
— — 21
08-10←12↗39
BWAS
32↓27b→46
BWAZ
34↓27b↑44
BKLF
27←27b→52
BLOS
24 ←27b→ —
— 55
BRUZ
19 ←27b→ 00
— —
BKLD
15 ←27b→ 04
— —
BGSK
12 ←27b→| 07
— —
BOR
44 ↓5↑09-11
27-29↓12↑18-20
[12] ↓20↑ [59]
BWSD
02↓27a↑16
BZUH
05→27a↑13
BBAS
10←27a→08-10
40↑27b→38-40
BSWH
14↓27a←06
44↓27b←36
BSL
18↙27a↑02
48↙27b↑32
BBI
[20]←20↑[54]
BKAR
23↓27a↗57
53↓27b↗27
BBRN
07 ←3→52-54
30-32←24→ 29
WRZ
26←24→34
WBT
21←24→38
WMCH
18←24→41
WE
51-53 ←3↑07-09
50-52
11 ←24↑ 48
[44] |←60→ 21
44 [21]
04/43 |←63↑17/56
BHSH
– ↘12↖00
42-44↘24↑15-17
BAHR
21↙25→35
BAFR
19←25→38
BAFN
17←25→40
BAHH
15←25→41
BBLU
13←25→44
BGS
44 02↓FEX→32 02
21-25↓3↗36-39
08-10↓5↑ 48
46-49
05 ←6→| 53
06
BLO
57-59←12↖51
– ←24↖05-07
32-38←25↗ 25
25 ↙26→36-38
BMHL
17←26→46
BST
05←26→58
BHE
01←26→01
BRE
58←26→04
BMB
49←26→14
BLS
09-11 ←1a→49-51
39-41 ←1b→19-21
25 ←2→35
13-15 ←7→44-46
35-37 ←14→14-16
[51] ←21→[08]
[21] ←21/22→[39]
BL
48 06 ↓FEX↑27 57
29-31 ↓3↑23-32
30-32
01-06↓4↖50-58
53-58
14-18↓5↑41-43
40-42
45-47↓10↖13-15
BFRI
07 ←1a→55
37 ←1b→25
19-21←2→37-39
11 ←7→49
33 ←14→19
[48] ←21→| [11]
[18] ←21/22→| [41]
BALE
03 ←1a→58
33 ←1b→28
15-17←2→41-43
08 ←7→53
29 ←14→23
BHF
57-59←1a→02-04
27-29←1b→32-34
01-03←7→55-57
21-25←14→26-28
BOKN
42 12↓FEX↑34 52
56-58↓24↑59-08
BOKN/BOKO
03 ↓12↑47
41 ↓25↑21
BOKO
28 |←26↗33
BOKR
52-54←1a→07-09
22-24←1b→37-39
08-10←2→49-51
57-59←7→00-02
16-18←14→30-32
BERK
37←1a→24
07←1b→54
BFS
02→1b→58
BHGB
57←1b→03
BFUW
24-26←1a→35-37
50-52←1b→08-10
45 ↓35↑ 19
BPOF
35↓3↑21
09↓4↑48
51
21↓5↑38
37
50↓10↑11
BSWP
04-06→24↑53
BFUS
51↓35↑13
BPAF
39-47 ↓3↑16
39-41
13-15↓4↑41-43
44-46
24-26↓5↑32-34
31-33
54 ↓10↑06
BFBI ✈
58 27↓FEX↑15 34
20-23←7↗39-42
47 |←14↗59
14-16←22→35-38
BKW
09-11↓2↑48-50
03 ←22→| 54
19-21↓24↑36-38
25 |←36↘33
BBSP
57↓35↑07
BLIH
52 ↙3↑09
46
20↙4↑36
39
32↙5↑28
26
BZS
24↓24↑33
BNDL
36↓36↖22
BBSK
59↓35↑05
BBF
47-49 ↓5↖13
47 08-10
26 ↓7→ 32
25-28
BBST
27↓24↑30
BZF
40↓36↑19
BDT
52 →5↑10
50 07
33 →7↑29
BRSF
06 ←5→57
02 55
25 ←7→35
BDAB
56 ←5→01
54 03
19 ←7→40
BZO
52 ←5→05
50 07
17 ←7→43
BWUE
44 ←5↓14
42 16
08 ←7↓52
BTPI
32↓24↑24
BKAB
42→36↑16
BFDF
11←36→47
BKUM
05←36→53
BSTW
01←36→57-02

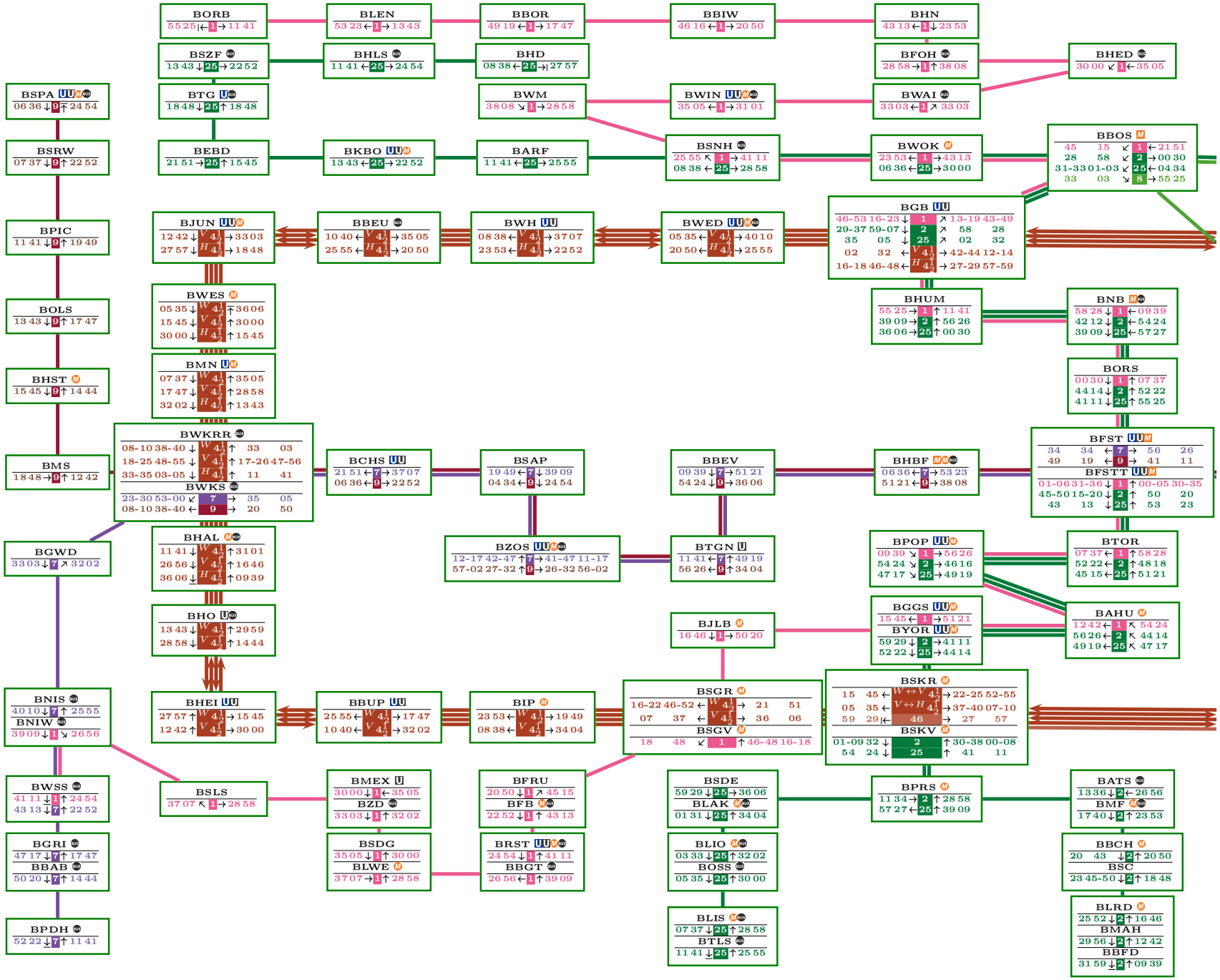
BORB
BLEN
BBOR
BBIW
BHN
BSZF
BHLS
BHD
BFOH
BHED
BSPA
BTG
BWM
BWIN
BWAI
BSRW
BEBD
BKBO
BARF
BSNH
BWOK
BBOS
BPIC
BJUN
BBEU
BWH
BWED
BGB
BHUM
BNB
BOLS
BWES
BMN
BORS
BHST
BWKRR
BWKS
BCHS
BSAP
BBEV
BHBF
BFST
BFSTT
BMS
BHAL
BZOS
BTGN
BPOP
BTOR
BGWD
BHO
BJLB
BGGS
BYOR
BAHU
BNIS
BNIW
BHEI
BBUP
BIP
BSGR
BSGV
BSKR
BSKV
BSLS
BMEX
BZD
BFRU
BFB
BSDE
BLAK
BPRS
BATS
BMF
BWSS
BSDG
BLWE
BRST
BBGT
BLIO
BOSS
BBCH
BSC
BGRI
BBAB
BLIS
BTLS
BLRD
BMAH
BBFD
BPDH

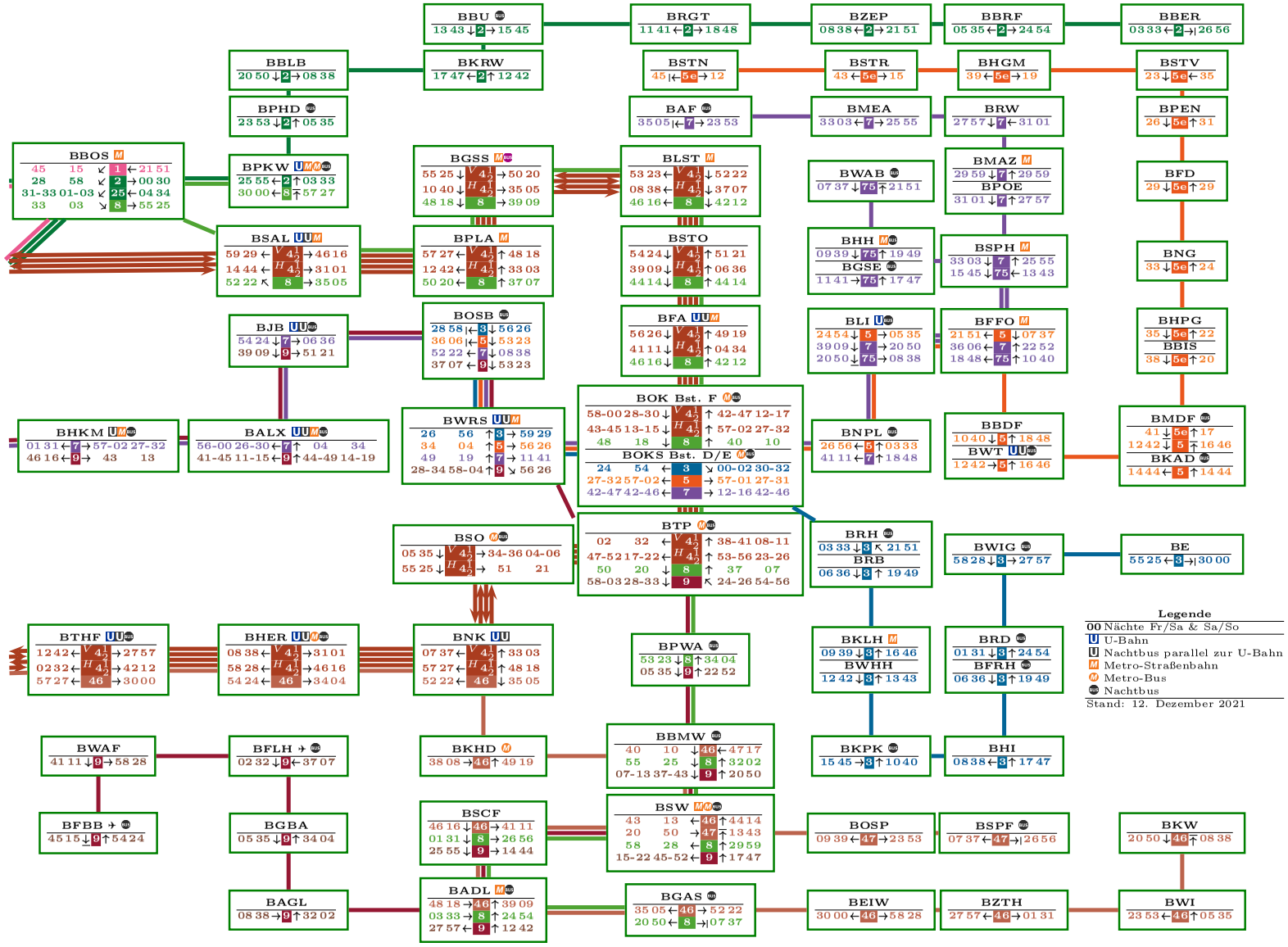
BBU
13 43 ↓ 2 → 15 45
BRGT
11 41 ← 2 → 18 48
BZEP
08 38 ← 2 → 21 51
BBRF
05 35 ← 2 → 24 54
BBER
03 33 ← 2 → 26 56
BBLB
20 50 ↓ 2 → 08 38
BKRW
17 47 ← 2 ↑ 12 42
BSTN
45 |← 5e → 12
BSTR
43 ← 5e → 15
BHGM
39 ← 5e → 19
BSTV
23 ↓ 5e ← 35
BPHD
23 53 ↓ 2 ↑ 05 35
BAF
35 05 |← 7 → 23 53
BMEA
33 03 ← 7 → 25 55
BRW
27 57 ↓ 7 ← 31 01
BPEN
26 ↓ 5e ↑ 31
BBOS M
45 15 ↙ 1 ← 21 51
28 58 ↙ 2 → 00 30
31-33 01-03 ↙ 25 ← 04 34
33 03 ↘ 8 → 55 25
BPKW U M M
25 55 ← 2 ↑ 03 33
30 00 ← 8 ↑ 57 27
BGSS M
55 25 ↓ V 4½ → 50 20
10 40 ↓ H 4½ → 35 05
48 18 ↓ 8 → 39 09
BLST M
53 23 ← V 4½ ↓ 52 22
08 38 ← H 4½ ↓ 37 07
46 16 ← 8 ↓ 42 12
BWAB
07 37 ↓ 75 ↑ 21 51
BMAZ M
29 59 ↓ 7 ↑ 29 59
BPOE
31 01 ↓ 7 ↑ 27 57
BFD
29 ↓ 5e ↑ 29
BSAL U U M
59 29 ← V 4½ → 46 16
14 44 ← H 4½ → 31 01
52 22 ↖ 8 → 35 05
BPLA M
57 27 ← V 4½ ↑ 48 18
12 42 ← H 4½ ↑ 33 03
50 20 ← 8 ↑ 37 07
BSTO
54 24 ↓ V 4½ ↑ 51 21
39 09 ↓ H 4½ ↑ 06 36
44 14 ↓ 8 ↑ 44 14
BHH M
09 39 ↓ 75 ↑ 19 49
BGSE
11 41 → 75 ↑ 17 47
BSPH M
33 03 ↓ 7 ↑ 25 55
15 45 ↓ 75 ← 13 43
BNG
33 ↓ 5e ↑ 24
BJB U U
54 24 ↓ 7 → 06 36
39 09 ↓ 9 → 51 21
BOSB
28 58 |← 3 ↓ 56 26
36 06 |← 5 ↓ 53 23
52 22 ← 7 ↓ 08 38
37 07 ← 9 ↓ 53 23
BFA U U M
56 26 ↓ V 4½ ↑ 49 19
41 11 ↓ H 4½ ↑ 04 34
46 16 ↓ 8 ↑ 42 12
BLI U
24 54 ↓ 5 → 05 35
39 09 ↓ 7 → 20 50
20 50 ↓ 75 → 08 38
BFFO M
21 51 ← 5 ↓ 07 37
36 06 ← 7 ↑ 22 52
18 48 ← 75 ↑ 10 40
BHPG
35 ↓ 5e ↑ 22
BBIS
38 ↓ 5e ↑ 20
BHKM U M
01 31 ← 7 → 57-02 27-32
46 16 ← 9 → 43 13
BALX U U M
56-00 26-30 ← 7 ↑ 04 34
41-45 11-15 ← 9 ↑ 44-49 14-19
BWRS U U M
26 56 ↑ 3 → 59 29
34 04 ↑ 5 → 56 26
49 19 ↑ 7 → 11 41
28-34 58-04 ↑ 9 ↘ 56 26
BOK Bst. F M
58-00 28-30 ↓ V 4½ ↑ 42-47 12-17
43-45 13-15 ↓ H 4½ ↑ 57-02 27-32
48 18 ↓ 8 ↑ 40 10
BOKS Bst. D/E M
24 54 ← 3 ↘ 00-02 30-32
27-32 57-02 ← 5 → 57-01 27-31
42-47 42-46 ← 7 → 12-16 42-46
BNPL
26 56 ← 5 ↑ 03 33
41 11 ← 7 ↑ 18 48
BBDF
10 40 ↓ 5 ↑ 18 48
BWT U U
12 42 → 5 ↑ 16 46
BMDF
41 ↓ 5e ↑ 17
12 42 ↓ 5 ↑ 16 46
BKAD
14 44 ← 5 ↑ 14 44
BSO M
05 35 ↓ V 4½ → 34-36 04-06
55 25 ↓ H 4½ → 51 21
BTP M
02 32 ← V 4½ ↑ 38-41 08-11
47-52 17-22 ← H 4½ ↑ 53-56 23-26
50 20 ↓ 8 ↑ 37 07
58-03 28-33 ↓ 9 ↖ 24-26 54-56
BRH
03 33 ↓ 3 ↖ 21 51
BRB
06 36 ↓ 3 ↑ 19 49
BWIG
58 28 ↓ 3 → 27 57
BE
55 25 ← 3 →| 30 00
BTHF U U
12 42 ← V 4½ → 27 57
02 32 ← H 4½ → 42 12
57 27 ← 46 → 30 00
BHER U U M
08 38 ← V 4½ → 31 01
58 28 ← H 4½ → 46 16
54 24 ← 46 → 34 04
BNK U U
07 37 ← V 4½ ↓ 33 03
57 27 ← H 4½ ↓ 48 18
52 22 ← 46 ↓ 35 05
BPWA
53 23 ↓ 8 ↑ 34 04
05 35 ↓ 9 ↑ 22 52
BKLH M
09 39 ↓ 3 ↑ 16 46
BWHH
12 42 ↓ 3 ↑ 13 43
BRD
01 31 ↓ 3 ↑ 24 54
BFRH
06 36 ↓ 3 ↑ 19 49
BWAF
41 11 ↓ 9 → 58 28
BFLH ✈
02 32 ↓ 9 ← 37 07
BKHD M
38 08 → 46 ↑ 49 19
BBMW
40 10 ↓ 46 ← 47 17
55 25 ↓ 8 ↑ 32 02
07-13 37-43 ↓ 9 ↑ 20 50
BKPK
15 45 → 3 ↑ 10 40
BHI
08 38 ← 3 ↑ 17 47
BFBB ✈
45 15 ↓ 9 ↑ 54 24
BGBA
05 35 ↓ 9 ↑ 34 04
BSCF
46 16 ↓ 46 → 41 11
01 31 ↓ 8 → 26 56
25 55 ↓ 9 → 14 44
BSW M M
43 13 ← 46 ↑ 44 14
20 50 → 47 ↑ 13 43
58 28 ← 8 ↑ 29 59
15-22 45-52 ← 9 ↑ 17 47
BOSP
09 39 ← 47 → 23 53
BSPF
07 37 ← 47 →| 26 56
BKW
20 50 ↓ 46 ↑ 08 38
BAGL
08 38 → 9 ↑ 32 02
BADL M
48 18 → 46 ↑ 39 09
03 33 → 8 ↑ 24 54
27 57 ← 9 ↑ 12 42
BGAS
35 05 ← 46 → 52 22
20 50 ← 8 →| 07 37
BEIW
30 00 ← 46 → 58 28
BZTH
27 57 ← 46 → 01 31
BWI
23 53 ← 46 ↑ 05 35
Legende
00 Nächte Fr/Sa & Sa/So
U U-Bahn
U Nachtbus parallel zur U-Bahn
M Metro-Straßenbahn
M Metro-Bus
Nachtbus
Stand: 12. Dezember 2021

S1 (Fr/Sa)				S1 (Sa/So)				S1 (Fr/Sa)				S1 (Sa/So)			
BWSS	00:54	30	04:24	00:54	30	06:24		BORB	01:11	30	03:41	01:11	30	05:41	
BORB	02:25		05:55	02:25		07:55		BWSS	02:41		05:11	02:41		07:11	

S2 (Fr/Sa)				S2 (Sa/So)				S2 (Fr/Sa)				S2 (Sa/So)			
BBFD	00:39	30	03:39	00:39	30	05:39		BBER	01:03	30	03:03	01:03	30	05:03	
BBER	01:56		04:56	01:56		06:56		BBFD	02:31		04:31	02:31		06:31	

S25 (Fr/Sa)				S25 (Sa/So)				S25 (Fr/Sa)				S25 (Sa/So)			
BTLS	00:55	30	04:25	00:55	30	05:55		BHD	01:08	30	04:38	01:08	30	06:38	
BHD	01:57		05:27	01:57		06:57		BTLS	02:11		05:41	02:11		07:41	

S5 (Fr/Sa)				S5 (Sa/So)				S5 (Fr/Sa)				S5 (Sa/So)			
BMDF	01:12	30	04:12	01:12	30	06:12		BOSB	01:23	30	04:23	01:23	30	06:23	
BOSB	01:36		04:36	01:36		06:36		BMDF	01:46		04:46	01:46		06:46	

S7 (Fr/Sa)				S7 (Sa/So)				S7 (Fr/Sa)				S7 (Sa/So)			
BAF	01:23	30	03:53	01:23	30	05:53		BPDH	00:41	30	03:41	00:41	30	05:41	
BPDH	02:52		05:22	02:52		07:22		BAF	02:05		05:05	02:05		07:05	

S75 (Fr/Sa)				S75 (Sa/So)				S75 (Fr/Sa)				S75 (Sa/So)			
BWAB	00:37	30	04:07	00:37	30	06:07		BLI	01:08	30	04:38	01:08	30	06:38	
BLI	00:50		04:20	00:50		06:20		BWAB	01:21		04:51	01:21		06:51	

S3 (Fr/Sa)				S3 (Sa/So)				S3 (Fr/Sa)				S3 (Sa/So)			
BE	00:55	30	03:55	00:55	30	05:55		BOSB	01:28	30	04:58	01:28	30	06:58	
BOSB	01:28		04:28	01:28		06:28		BE	02:02		05:32	02:02		07:32	

S9 (Fr/Sa)				S9 (Sa/So)				S9 (Fr/Sa)				S9 (Sa/So)			
BFLH	01:02	30	04:02	01:02	30	06:02		BSPA	01:06	30	03:06	01:06	30	03:06	
BSPA	02:24		05:24	02:24		07:24		BFLH	02:36		04:36	02:36		04:36	

S5 (Fr/Sa)					S5 (Sa/So)					S5 (Fr/Sa)					S5 (Sa/So)		
BSTN		01:09	02:12	03:12		01:09	02:12	60	05:12	BMDF	02:17	60	04:17	02:17	60	06:17	
BST	00:40	01:23	02:23	03:23	00:40	01:23	02:23		05:23	BST	02:35		04:35	02:35		06:35	
BMDF	01:00	01:41	02:41	03:41	01:00	01:41	02:41		05:41	BSTN	02:45		04:45	02:45		06:45	

S8 (Fr/Sa)				S8 (Sa/So)				S8 (Fr/Sa)				S8 (Sa/So)			
BGAS	00:50	30	03:50	00:50	30	03:50		BPKW	01:30	30	04:30	01:30	30	04:30	
BPKW	01:27		04:27	01:27		04:27		BGAS	02:07		05:07	02:07		05:07	

S46 (Fr/Sa)				S46 (Sa/So)				S46 (Fr/Sa)				S46 (Sa/So)			
BKW	00:50	30	04:20	00:50	30	05:50		BSKR	01:27	30	03:57	01:27	30	05:57	
BSKR	01:29		04:59	01:29		06:29		BKW	02:08		04:38	02:08		06:38	

S47 (Fr/Sa)				S47 (Sa/So)				S47 (Fr/Sa)				S47 (Sa/So)			
BSPF	01:35	30	04:35	01:35	30	06:35		BSW	01:47	30	04:47	01:47	30	06:47	
BSW	01:41		04:41	01:41		06:41		BSPF	01:53		04:53	01:53		06:53	

S41 A (Fr/Sa)

von	↺	↺	↺	↺	↺	↺		↺	↺		↺	↺		HAL	↺		HAL	↺		HAL	↺		HAL	↺	HAL	↺		HAL	
BSKR	00:26	00:36	00:46	00:56	01:06	01:16		01:35	01:46		02:05	02:15		02:35	02:45		03:05	03:15		03:35	03:45		04:05	04:15	04:35	04:46	04:56	05:06	
BSGR o	00:27	00:37	00:47	00:57	01:07	01:17		01:36	01:47		02:06	02:16		02:36	02:46		03:06	03:16		03:36	03:46		04:06	04:16	04:36	04:47	04:57	05:06	
BSGR	00:28	00:38	00:48	00:58	01:08	01:22		01:37	01:52		02:07	02:22		02:37	02:52		03:07	03:22		03:37	03:52		04:07	04:22	04:37	04:48	04:58	05:07	
BHAL	00:37	00:47	00:57	01:07	01:17	01:31	01:39	01:46	02:01	02:09	02:16	02:31	02:39	02:46	03:01	03:09	03:16	03:31	03:39	03:46	04:01	04:09	04:16	04:31	04:46	04:57	05:07	05:16	
BWKRR o	00:38	00:48	00:58	01:08	01:18	01:32	01:40	01:47	02:02	02:10	02:17	02:32	02:40	02:47	03:02	03:10	03:17	03:32	03:40	03:47	04:02	04:10	04:17	04:32	04:47	04:58	05:08	05:17	
BWKRR	00:39	00:49	00:59	01:11	01:26	01:33	01:41	01:56	02:03	02:11	02:26	02:33	02:41	02:56	03:03	03:11	03:26	03:33	03:41	03:56	04:03	04:11	04:26	04:39	04:49	04:59	05:09	05:19	
BWES	00:42	00:52	01:02	01:15	01:30	01:36	01:45	02:00	02:06	02:15	02:30	02:36	02:45	03:00	03:06	03:15	03:30	03:36	03:45	04:00	04:06	04:15	04:30	04:42	04:52	05:02	05:12	05:22	
BGB o	00:55	01:05	01:15	01:27	01:42		01:57	02:12		02:27	02:42		02:57	03:12		03:27	03:42		03:57	04:12		04:27	04:42	04:55	05:05	05:15	05:25	05:35	
BGB	00:59		01:15	01:29	01:44		01:59	02:14		02:29	02:44		02:59	03:14		03:29	03:44		03:59	04:14		04:29	04:45	04:55	05:05	05:15	05:25	05:35	
BOK o	01:13		01:30	01:43	01:58		02:13	02:28		02:43	02:58		03:13	03:28		03:43	03:58		04:13	04:28		04:43	05:00	05:10	05:20	05:30	05:40	05:50	
BOK	01:15		01:31	01:45	02:00		02:15	02:30		02:45	03:00		03:15	03:30		03:45	04:00		04:15	04:30		04:45	05:01	05:11	05:21	05:31	05:41	05:51	
BTP o	01:17		01:32	01:47	02:01		02:17	02:31		02:47	03:01		03:17	03:31		03:47	04:01		04:17	04:31		04:47	05:02	05:12	05:22	05:32	05:42	05:52	
BTP	01:22		01:33	01:52	02:02		02:22	02:32		02:52	03:02		03:22	03:32		03:52	04:02		04:22	04:32		04:52	05:03	05:13	05:23	05:33	05:43	05:53	
BSKR o	01:34		01:45	02:04	02:14		02:34	02:44		03:04	03:14		03:34	03:44		04:04	04:14		04:34	04:44		05:04	05:15	05:25	05:35	05:45	05:55	05:05	
nach	↺		WES	↺	WES		↺	WES		↺	WES		↺	WES		↺	↺		↺	↺		↺	↺	↺	↺	↺	↺	↺	

S41 A (Sa/So)

von	↺	↺	↺	↺	↺		↺	↺		↺	↺		HAL	↺		HAL	↺		HAL	↺		HAL	↺	HAL	↺	HAL	↺	↺	↺
BSKR	00:26	00:46	00:56	01:06	01:16		01:35	01:46		02:05	02:15		02:35	02:45		03:05	03:15		03:35	03:45		04:05	04:15	04:35	04:45	05:05	05:15	05:35	05:45
BSGR o	00:27	00:47	00:57	01:07	01:17		01:36	01:47		02:06	02:16		02:36	02:46		03:06	03:16		03:36	03:46		04:06	04:16	04:36	04:46	05:06	05:16	05:36	05:46
BSGR	00:28	00:48	00:58	01:08	01:22		01:37	01:52		02:07	02:22		02:37	02:52		03:07	03:22		03:37	03:52		04:07	04:22	04:37	04:52	05:07	05:22	05:37	05:52
BHAL	00:37	00:57	01:07	01:17	01:31	01:39	01:46	02:01	02:09	02:16	02:31	02:39	02:46	03:01	03:09	03:16	03:31	03:39	03:46	04:01	04:09	04:16	04:31	04:46	05:01	05:16	05:31	05:46	06:01
BWKRR o	00:38	00:58	01:08	01:18	01:32	01:40	01:47	02:02	02:10	02:17	02:32	02:40	02:47	03:02	03:10	03:17	03:32	03:40	03:47	04:02	04:10	04:17	04:32	04:47	05:02	05:17	05:32	05:47	06:02
BWKRR	00:39	00:59	01:11	01:26	01:33	01:41	01:56	02:03	02:11	02:26	02:33	02:41	02:56	03:03	03:11	03:26	03:33	03:41	03:56	04:03	04:11	04:26	04:41	04:56	05:11	05:26	05:41	05:56	06:09
BWES	00:42	01:02	01:15	01:30	01:36	01:45	02:00	02:06	02:15	02:30	02:36	02:45	03:00	03:06	03:15	03:30	03:36	03:45	04:00	04:06	04:15	04:30	04:45	05:00	05:15	05:30	05:45	06:00	06:12
BGB o	00:55	01:15	01:27	01:42		01:57	02:12		02:27	02:42		02:57	03:12		03:27	03:42		03:57	04:12		04:27	04:42	04:57	05:12	05:27	05:42	05:57	06:12	06:25
BGB	00:59	01:15	01:29	01:44		01:59	02:14		02:29	02:44		02:59	03:14		03:29	03:44		03:59	04:14		04:29	04:44	04:59	05:14	05:29	05:44	05:59	06:14	06:25
BOK o	01:13	01:30	01:43	01:58		02:13	02:28		02:43	02:58		03:13	03:28		03:43	03:58		04:13	04:28		04:43	04:58	05:13	05:28	05:43	05:58	06:13	06:28	06:40
BOK	01:15	01:31	01:45	02:00		02:15	02:30		02:45	03:00		03:15	03:30		03:45	04:00		04:15	04:30		04:45	05:00	05:15	05:30	05:45	06:00	06:15	06:30	06:41
BTP o	01:17	01:32	01:47	02:01		02:17	02:31		02:47	03:01		03:17	03:31		03:47	04:01		04:17	04:31		04:47	05:01	05:17	05:31	05:47	06:01	06:17	06:31	06:42
BTP	01:22	01:33	01:52	02:02		02:22	02:32		02:52	03:02		03:22	03:32		03:52	04:02		04:22	04:32		04:52	05:02	05:22	05:32	05:52	06:02	06:22	06:33	06:43
BSKR o	01:34	01:45	02:04	02:14		02:34	02:44		03:04	03:14		03:34	03:44		04:04	04:14		04:34	04:44		05:04	05:14	05:34	05:44	06:04	06:14	06:34	06:45	06:55
nach	↺	WES	↺	WES		↺	WES		↺	WES		↺	WES		↺	↺		↺	↺		↺	↺	↺	↺	↺	↺	↺	↺	↺

S42 R (Fr/Sa)

von	↺	↺	↺	↺	↺	↺		↺	↺		↺	↺		WES	↺		↺	↺		WES	↺	WES		WES		↺	↺						
BSKR	00:20	00:30	00:40	00:50	01:00	01:10		01:24	01:40		01:54	02:10		02:24	02:40		02:54	03:10		03:24	03:40	03:54	04:10	04:24		04:40	04:54						
BTP o	00:33	00:43	00:53	01:03	01:13	01:23		01:39	01:54		02:09	02:24		02:39	02:54		03:09	03:24		03:39	03:54	04:09	04:24	04:39		04:54	05:09						
BTP	00:33	00:43	00:53	01:03	01:13	01:27		01:41	01:57		02:11	02:27		02:41	02:57		03:11	03:27		03:41	03:57	04:11	04:27	04:41		04:57	05:11						
BOK o	00:35	00:45	00:55	01:05	01:15	01:28		01:42	01:58		02:12	02:28		02:42	02:58		03:12	03:28		03:42	03:58	04:12	04:28	04:42		04:58	05:12						
BOK	00:36	00:46	00:56	01:06	01:16	01:32		01:47	02:02		02:17	02:32		02:47	03:02		03:17	03:32		03:47	04:02	04:17	04:32	04:46		05:02	05:16						
BGB o	00:50	01:00	01:10	01:20	01:30	01:46		02:01	02:16		02:31	02:46		03:01	03:16		03:31	03:46		04:01	04:16	04:31	04:46	05:00		05:16	05:30						
BGB	00:51	01:01	01:11	01:21	01:31	01:48		02:02	02:18		02:32	02:48		03:02	03:18		03:32	03:48		04:02	04:18	04:32	04:48	05:01		05:18	05:31						
BWES	01:03	01:13	01:23	01:33	01:43	02:00	02:05	02:15	02:30	02:35	02:45	03:00	03:05	03:15	03:30	03:35	03:45	04:00	04:05	04:15	04:30	04:45	05:00	05:13	05:23	05:30	05:43						
BWKRR o	01:07	01:17	01:27	01:37	01:47	02:03	02:08	02:18	02:33	02:38	02:48	03:03	03:08	03:18	03:33	03:38	03:48	04:03	04:08	04:18	04:33	04:48	05:03	05:17	05:27	05:33	05:47						
BWKRR	01:10	01:25	01:27	01:40	01:55	02:04	02:10	02:25	02:34	02:40	02:55	03:04	03:10	03:25	03:34	03:40	03:55	04:04	04:10	04:25	04:40	04:55	05:07	05:17	05:27	05:37	05:47						
BHAL	01:11	01:26	01:28	01:41	01:56	02:05	02:11	02:26	02:35	02:41	02:56	03:05	03:11	03:26	03:35	03:41	03:56	04:05	04:11	04:26	04:41	04:56	05:09	05:19	05:29	05:39	05:49						
BSGR o	01:20	01:35		01:50	02:05		02:20	02:35		02:50	03:05		03:20	03:35		03:50	04:05		04:20	04:35	04:50	05:05	05:18	05:28	05:38	05:48	05:58						
BSGR	01:21	01:36		01:51	02:06		02:21	02:36		02:51	03:06		03:21	03:36		03:51	04:06		04:21	04:36	04:51	05:06	05:18	05:28	05:38	05:48	05:58						
BSKR o	01:22	01:37		01:52	02:07		02:22	02:37		02:52	03:07		03:22	03:37		03:52	04:07		04:22	04:37	04:52	05:07	05:20	05:30	05:40	05:50	06:00						
nach	↺	HAL			HAL		↺	HAL		↺	HAL		↺	↺		↺	↺		↺	↺	↺	↺	↺	↺	↺	↺	↺						

S42 R (Sa/So)

von	↺	↺	↺	↺	↺	↺		↺	↺		↺	↺		WES	↺		WES	↺		WES	↺	WES	↺	WES	↺	↺	↺	↺	↺	↺		↺	↺
BSKR	00:20	00:30	00:40	00:50	01:00	01:10		01:24	01:40		01:54	02:10		02:24	02:40		02:54	03:10		03:24	03:40	03:54	04:10	04:24	04:40	04:54	05:10	05:24	05:40	05:54		06:10	06:24
BTP o	00:33	00:43	00:53	01:03	01:13	01:23		01:39	01:54		02:09	02:24		02:39	02:54		03:09	03:24		03:39	03:54	04:09	04:24	04:39	04:54	05:09	05:24	05:39	05:54	06:09		06:24	06:39
BTP	00:33	00:43	00:53	01:03	01:13	01:27		01:41	01:57		02:11	02:27		02:41	02:57		03:11	03:27		03:41	03:57	04:11	04:27	04:41	04:57	05:11	05:27	05:41	05:57	06:11		06:27	06:41
BOK o	00:35	00:45	00:55	01:05	01:15	01:28		01:42	01:58		02:12	02:28		02:42	02:58		03:12	03:28		03:42	03:58	04:12	04:28	04:42	04:58	05:12	05:28	05:42	05:58	06:12		06:28	06:42
BOK	00:36	00:46	00:56	01:06	01:16	01:32		01:47	02:02		02:17	02:32		02:47	03:02		03:17	03:32		03:47	04:02	04:17	04:32	04:47	05:02	05:17	05:32	05:47	06:02	06:16		06:32	06:46
BGB o	00:50	01:00	01:10	01:20	01:30	01:46		02:01	02:16		02:31	02:46		03:01	03:16		03:31	03:46		04:01	04:16	04:31	04:46	05:01	05:16	05:31	05:46	06:01	06:16	06:30		06:46	07:00
BGB	00:51	01:01	01:11	01:21	01:31	01:48		02:02	02:18		02:32	02:48		03:02	03:18		03:32	03:48		04:02	04:18	04:32	04:48	05:02	05:18	05:32	05:48	06:02	06:18	06:31		06:48	07:01
BWES	01:03	01:13	01:23	01:33	01:43	02:00	02:05	02:15	02:30	02:35	02:45	03:00	03:05	03:15	03:30	03:35	03:45	04:00	04:05	04:15	04:30	04:45	05:00	05:15	05:30	05:45	06:00	06:15	06:30	06:43	06:53	07:00	07:13
BWKRR o	01:07	01:17	01:27	01:37	01:47	02:03	02:08	02:18	02:33	02:38	02:48	03:03	03:08	03:18	03:33	03:38	03:48	04:03	04:08	04:18	04:33	04:48	05:03	05:18	05:33	05:48	06:03	06:18	06:33	06:47	06:57	07:03	07:17
BWKRR	01:10	01:25	01:27	01:40	01:55	02:04	02:10	02:25	02:34	02:40	02:55	03:04	03:10	03:25	03:34	03:40	03:55	04:04	04:10	04:25	04:40	04:55	05:10	05:25	05:40	05:55	06:10	06:25	06:37	06:47	06:57	07:07	07:17
BHAL	01:11	01:26	01:28	01:41	01:56	02:05	02:11	02:26	02:35	02:41	02:56	03:05	03:11	03:26	03:35	03:41	03:56	04:05	04:11	04:26	04:41	04:56	05:11	05:26	05:41	05:56	06:11	06:26	06:39	06:49	06:59	07:09	07:19
BSGR o	01:20	01:35		01:50	02:05		02:20	02:35		02:50	03:05		03:20	03:35		03:50	04:05		04:20	04:35	04:50	05:05	05:20	05:35	05:50	06:05	06:20	06:35	06:48	06:58	07:08	07:18	07:28
BSGR	01:21	01:36		01:51	02:06		02:21	02:36		02:51	03:06		03:21	03:36		03:51	04:06		04:21	04:36	04:51	05:06	05:21	05:36	05:51	06:06	06:21	06:36	06:48	06:58	07:08	07:18	07:28
BSKR o	01:22	01:37		01:52	02:07		02:22	02:37		02:52	03:07		03:22	03:37		03:52	04:07		04:22	04:37	04:52	05:07	05:22	05:37	05:52	06:07	06:22	06:37	06:50	07:00	07:10	07:20	07:30
nach	↺	HAL		↺	HAL		↺	HAL		↺	HAL		↺	↺		↺	↺		↺	↺	↺	↺	↺	↺	↺	↺	↺	↺	↺	↺	↺	↺	↺

BADL	3/4	3	45	BER Terminal 1-2 ✈
			46	Königs Wusterhausen
			8	Zeuthen
			85	Grünau
			9	BER Terminal 1-2 ✈
		4	45	Südkreuz
			46	Westend
			8	Birkenwerder
			85	Pankow
			9	Spandau
BAF	41	41	7	Ankunft
			7	Potsdam Hbf
	42/44	42	7	Ankunft
			7	Potsdam Hbf
		44		Regionalverkehr
BAGL	1/2	1	45	BER Terminal 1-2 ✈
			9	BER Terminal 1-2 ✈
		2	45	Südkreuz
			9	Spandau
BAHU	A	1		kein Zugverkehr
		2	1	Wannsee
			2	Blankenfelde
			25	Teltow Stadt
			26	Teltow Stadt
	B	3	1	Oranienburg
		4	2	Bernau
			25	Hennigsdorf
			26	Waidmannslust
BALX	B	3	3	Erkner
			5	Strausberg Nord
			7	Ahrensfelde
			9	BER Terminal 1-2 ✈
		4	3	Spandau
			5	Westkreuz
			7	Potsdam Hbf
			9	Spandau
BARF	1	1	25	Teltow Stadt
			25	Hennigsdorf
BATS	1/2	1	2	Blankenfelde
		2	2	Bernau
BBAB	1/2	1	7	Ahrensfelde
		2	7	Potsdam Hbf
BBCH	1/2	1	2	Blankenfelde
		2	2	Bernau
BBDF	1	1	5	Westkreuz
	2	2	5	Strausberg Nord
BBER	1/2	1	2	Ankunft
			2	Blankenfelde
		2	2	Ankunft
			2	Blankenfelde
BBEU	1/2	1	41	Ring ↻
		2	42	Ring ↻
BBEV	3/4	3	3	Erkner
			5	Strausberg Nord
			7	Ahrensfelde
			9	BER Terminal 1-2 ✈
		4	3	Spandau
			5	Westkreuz
			7	Potsdam Hbf
			9	Spandau
BBFD	3	3	2	Ankunft
			2	Bernau
BBFE	1/2	1	8	Zeuthen
		2	8	Birkenwerder
BBGT	1/2	1	1	Wannsee
		2	1	Oranienburg
BBIS	1/2	1	5	Westkreuz
		2	5	Strausberg Nord
BBIW	4/6	4	1	Oranienburg
			8	Ankunft
		6	1	Wannsee
			8	Zeuthen
BBLB	1/4	1	2	Blankenfelde
			8	Zeuthen
			8	Zeuthen
		4	2	Bernau
			8	Birkenwerder
			8	Ankunft
BBMW	A	3	8	Zeuthen
			85	Grünau
			9	BER Terminal 1-2 ✈
		5	45	BER Terminal 1-2 ✈
			46	Königs Wusterhausen
			47	Spindlersfeld
	B	4	45	Südkreuz
			46	Westend
			47	Hermannstraße
			8	Birkenwerder
			85	Pankow
			9	Spandau
BBOR	1/2	1	1	Oranienburg
		2	1	Wannsee

BBOS	A	1	1	Wannsee
			25	Teltow Stadt
			26	Teltow Stadt
		2	2	Blankenfelde
			8	Zeuthen
			85	Grünau
	B	3	2	Bernau
			8	Birkenwerder
			85	Pankow
		4	1	Oranienburg
			25	Hennigsdorf
			26	Waidmannslust
BBRF	1	1	2	Bernau
			2	Blankenfelde
BBU	1/2	1	2	Bernau
			2	Ankunft
		2	2	Lichtenrade
			2	Blankenfelde
BBUP	1/2	1	41	Ring ↻
			46	Westend
		2	42	Ring ↻
			46	Königs Wusterhausen
BCHS	C	6	3	Erkner
			5	Strausberg Nord
			7	Ahrensfelde
			9	BER Terminal 1-2 ✈
	D	7	7	Potsdam Hbf
		8	3	Spandau
			5	Westkreuz
			9	Spandau
BE	31/32	31	3	Ankunft
			3	Westkreuz
		32	3	Ankunft
			3	Westkreuz
BEBD	2	2	25	Teltow Stadt
			25	Hennigsdorf
BEIW	3/4	3	46	Königs Wusterhausen
			8	Zeuthen
		4	46	Westend
			8	Birkenwerder
BFA	1/2	1	41	Ring ↻
			8	Zeuthen
			85	Grünau
		2	42	Ring ↻
			8	Birkenwerder
			85	Pankow
BFB	1/2	1	1	Wannsee
		2	1	Oranienburg
BFBB ✈	5/6	5	9	Ankunft
			9	Spandau
		6	45	Ankunft
			45	Südkreuz
BFD	15/16	15	5	Strausberg Nord
		16	5	Westkreuz
BFFO	1/2	1	5	Strausberg Nord
			7	Ahrensfelde
			75	Wartenberg
		2	5	Westkreuz
			7	Potsdam Hbf
			75	Warschauer Straße
BFLH ✈	A	11	45	BER Terminal 1-2 ✈
			9	BER Terminal 1-2 ✈
		13	45	Südkreuz
			9	Spandau
BFOH	1/2	1	1	Ankunft
			1	Oranienburg
		2	1	Wannsee
			1	Wannsee
BFRH	1/4	1	3	Spandau
			3X	Ostbahnhof
			3	Ostbahnhof
		4	3	Ankunft
			3X	Ankunft
			3	Erkner
BFRU	1/2	1	1	Wannsee
		2	1	Oranienburg
BFST	C	5	3	Erkner
			5	Strausberg Nord
			7	Ahrensfelde
			9	BER Terminal 1-2 ✈
		6	3	Spandau
			5	Westkreuz
			7	Potsdam Hbf
			9	Spandau
BFSTT	D	11	1	Wannsee
			2	Blankenfelde
			25	Teltow Stadt
			26	Teltow Stadt
		12	1	Oranienburg
			2	Bernau
			25	Hennigsdorf
			26	Waidmannslust

BGAS	A	1	46	Königs Wusterhausen
			8	Zeuthen
		2	8	Ankunft
			85	Ankunft
	B	3	8	Birkenwerder
			85	Pankow
		4	46	Westend
			8	Birkenwerder
BGB	A	1	1	Wannsee
			2	Blankenfelde
			25	Teltow Stadt
			26	Teltow Stadt
		2	42	Ring ↻
	B	3	41	Ring ↻
		4	1	Oranienburg
			2	Bernau
			25	Hennigsdorf
			26	Waidmannslust
BGBA	1/2	1	45	BER Terminal 1-2 ✈
			9	BER Terminal 1-2 ✈
		2	45	Südkreuz
			9	Spandau
BGGS	1/2	1	1	Wannsee
		2	1	Oranienburg
BGRI	1/2	1	7	Potsdam Hbf
		2	7	Ahrensfelde
BGSE	1/2	1	75	Wartenberg
		2	75	Warschauer Straße
BGSS	1/2	1	41	Ring ↻
			8	Zeuthen
			85	Grünau
		2	42	Ring ↻
			8	Birkenwerder
			85	Pankow
BGWD	A	1	7	Potsdam Hbf
		2	3	Ankunft
			5	Ankunft
			7	Ankunft
	B	3	3	Erkner
			5	Mahlsdorf
			7	Ahrensfelde
		4	7	Ahrensfelde
BHAL	1/2	1	41	Ring ↻
			46	Westend
		2	42	Ring ↻
			46	Königs Wusterhausen
BHBF	15/16	15	3	Erkner
			5	Strausberg Nord
			7	Ahrensfelde
			9	BER Terminal 1-2 ✈
		16	3	Spandau
			5	Westkreuz
			7	Potsdam Hbf
			9	Spandau
BHD	A	1	25	Ankunft
			25	Teltow Stadt
				Regionalverkehr
		5	25	Ankunft
			25	Teltow Stadt
				Regionalverkehr
BHED	1/2	1	1	Oranienburg
		2	1	Wannsee
BHEI	1/2	1	41	Ring ↻
			46	Westend
		2	42	Ring ↻
			46	Königs Wusterhausen
BHER	1/2	1	41	Ring ↻
			45	Südkreuz
			46	Westend
			47	Ankunft
		2	42	Ring ↻
			45	BER Terminal 1-2 ✈
			46	Königs Wusterhausen
			47	Spindlersfeld
BHGM	1	1	5	Strausberg Nord
			5	Westkreuz
BHH	1/2	1	75	Wartenberg
		2	75	Warschauer Straße
BHI	1/2	1	3	Westkreuz
		2	3	Erkner
BHKM	3/4	3	3	Erkner
			5	Strausberg Nord
			7	Ahrensfelde
			9	BER Terminal 1-2 ✈
		4	3	Spandau
			5	Westkreuz
			7	Potsdam Hbf
			9	Spandau

BHLS	1/2	1	25	Hennigsdorf
			25	Teltow Stadt
BHN	3/4	3	1	Oranienburg
			8	Birkenwerder
		4	1	Wannsee
			8	Zeuthen
BHO	1/2	1	41	Ring ↻
			46	Westend
		2	42	Ring ↻
			46	Königs Wusterhausen
BHPG	4/5	4	5	Westkreuz
			5	Westkreuz
		5	5	Ankunft
			5	Westkreuz
BHST	1/2	1	3	Erkner
			9	BER Terminal 1-2 ✈
		2	3	Spandau
			9	Spandau
BHUM	1/2	1	1	Wannsee
			2	Blankenfelde
			25	Teltow Stadt
			26	Teltow Stadt
		2	1	Oranienburg
			2	Bernau
			25	Hennigsdorf
			26	Waidmannslust
BIP	1/2	1	41	Ring ↻
			46	Westend
		2	42	Ring ↻
			46	Königs Wusterhausen
BJB	3/4	3	3	Erkner
			5	Strausberg Nord
			7	Ahrensfelde
			9	BER Terminal 1-2 ✈
		4	3	Spandau
			5	Westkreuz
			7	Potsdam Hbf
			9	Spandau
BJLB	1	1	1	Wannsee
	2	2	1	Oranienburg
BJUN	B	5	41	Ring ↻
		6	42	Ring ↻
BKAD	1/2	1	5	Westkreuz
		2	5	Strausberg Nord
BKBO	2	2	25	Teltow Stadt
			25	Hennigsdorf
BKHD	1/2	1	45	Südkreuz
			46	Westend
			47	Hermannstraße
		2	45	BER Terminal 1-2 ✈
			46	Königs Wusterhausen
			47	Spindlersfeld
BKLH	11/12	11	3	Spandau
			3X	Ostbahnhof
		12	3	Erkner
			3X	Friedrichshagen
BKPK	1/2	1	3	Spandau
			3X	Ostbahnhof
		2	3	Erkner
			3X	Friedrichshagen
BKRW	1/2	1		Regionalverkehr
		2	2	Bernau
			2	Blankenfelde
BKW	B	2	46	Ankunft
			46	Westend
		3		Regionalverkehr
BLAK	2	2	25	Teltow Stadt
			26	Teltow Stadt
			25	Hennigsdorf
			26	Waidmannslust
BLEN	1/2	1	1	Oranienburg
		2	1	Wannsee
BLI	1/2	1	5	Strausberg Nord
			7	Ahrensfelde
			75	Wartenberg
		2	5	Westkreuz
			7	Potsdam Hbf
			75	Warschauer Straße
BLIO	1/2	1	25	Teltow Stadt
			26	Teltow Stadt
		2	25	Hennigsdorf
			26	Waidmannslust
BLIS	1/2	1	25	Teltow Stadt
			26	Teltow Stadt
		2	25	Hennigsdorf
			26	Waidmannslust

BLRD	1/2	1	2	Blankenfelde
			2	Bernau
		2	2	Ankunft
			2	Buch
BLST	1/2	1	41	Ring ↻
			8	Zeuthen
			85	Grünau
		2	42	Ring ↻
			8	Birkenwerder
			85	Pankow
BLWE	1/2	1	1	Wannsee
		2	1	Oranienburg
BMAH	2/3	2	2	Bernau
		3	2	Blankenfelde
BMAZ	1/2	1	7	Ahrensfelde
		2	7	Potsdam Hbf
BMDF	1/2	1	5	Ankunft
			5	Westkreuz
			5	Ostbahnhof
		2	5	Westkreuz
	3/4	3	5	Strausberg Nord
		4	5	Ankunft
			5	Strausberg Nord
BMEA	1/2	1	7	Ahrensfelde
		2	7	Potsdam Hbf
BMEX	1/2	1	1	Wannsee
		2	1	Oranienburg
BMF	1/2	1	2	Blankenfelde
		2	2	Bernau
BMM	6	6	8	Birkenwerder
			8	Zeuthen
BMN	1/2	1	41	Ring ↻
			46	Westend
		2	42	Ring ↻
			46	Königs Wusterhausen
BMS	1/2	1	3	Erkner
			9	BER Terminal 1-2 ✈
		2	3	Spandau
			9	Spandau
BNB	A	1	1	Oranienburg
			2	Blankenfelde
			25	Teltow Stadt
			26	Teltow Stadt
		2	25	Teltow Stadt
	B	3	25	Ankunft
		4	1	Oranienburg
			2	Bernau
			25	Hennigsdorf
			26	Waidmannslust
BNIS	3/4	3	7	Potsdam Hbf
		4	7	Ahrensfelde
BNIW	1/2	1	1	Wannsee
		2	1	Oranienburg
BNG	1	1	5	Strausberg Nord
			5	Westkreuz
BNK	1/2	1	41	Ring ↻
			45	Südkreuz
			46	Westend
			47	Hermannstraße
		2	42	Ring ↻
			45	BER Terminal 1-2 ✈
			46	Königs Wusterhausen
			47	Spindlersfeld
BNPL	1/2	1	5	Strausberg Nord
			7	Ahrensfelde
			75	Wartenberg
		2	5	Westkreuz
			7	Potsdam Hbf
			75	Warschauer Straße
BOK	F	11	41	Ring ↻
			8	Zeuthen
			85	Grünau
		12	42	Ring ↻
			8	Birkenwerder
			85	Pankow
BOKS	D	5	3	Ostbahnhof
			5	Ostbahnhof
			75	Warschauer Straße
		6	3	Spandau
			3X	Ostbahnhof
			5	Westkreuz
			7	Potsdam Hbf
	E	3	3	Erkner
			3X	Friedrichshagen
			5	Strausberg Nord
			7	Ahrensfelde
		4	75	Wartenberg

BOLS	A	1	3	Erkner
			9	BER Terminal 1-2 ✈
		2	3	Spandau
			9	Spandau
	B-E			bei Veranstaltungen
BORB	A	30	1	Ankunft
			1	Wannsee
		32		kein Zugverkehr
BORS	1/2	1	1	Wannsee
			2	Blankenfelde
			25	Teltow Stadt
			26	Teltow Stadt
		2	1	Oranienburg
			2	Bernau
			25	Hennigsdorf
			26	Waidmannslust
BOSB	D	8	3	Erkner
			5	Strausberg Nord
			7	Ahrensfelde
			9	BER Terminal 1-2 ✈
		9	3	Erkner
			3X	Friedrichshagen
			5	Mahlsdorf
	E	10	3	Ankunft
			3X	Ankunft
			5	Ankunft
		11	3	Spandau
			5	Westkreuz
			7	Potsdam Hbf
			9	Spandau
BOSP	1	1	47	Spindlersfeld
			47	Hermannstraße
BOSS	1/2	1	25	Teltow Stadt
			26	Teltow Stadt
		2	25	Hennigsdorf
			26	Waidmannslust
BPDH	C	6	7	Ankunft
			7	Ahrensfelde
		7	7	Ankunft
			7	Ahrensfelde
BPEN	1	1	5	Strausberg Nord
			5	Westkreuz
BPHD	1/2	1	2	Blankenfelde
			8	Zeuthen
		2	2	Bernau
			8	Birkenwerder
BPIC	1/2	1	3	Erkner
			9	BER Terminal 1-2 ✈
		2	3	Spandau
			9	Spandau
BPKW	1/2	1	2	Bernau
			8	Birkenwerder
		2	2	Blankenfelde
			8	Zeuthen
			85	Ankunft
			85	Grünau
BPLA	1/2	1	41	Ring ↻
			8	Zeuthen
			85	Grünau
		2	42	Ring ↻
			8	Birkenwerder
			85	Pankow
BPOE	1/2	1	7	Ahrensfelde
		2	7	Potsdam Hbf
BPOP	A	11	1	Wannsee
			2	Blankenfelde
			25	Teltow Stadt
			26	Teltow Stadt
		12	1	Zehlendorf
			26	Teltow Stadt
	B	14	1	Oranienburg
			1	Ankunft
			2	Bernau
			25	Hennigsdorf
			26	Waidmannslust
			26	Ankunft
BPRS	A	1	2	Blankenfelde
		3	25	Teltow Stadt
			26	Teltow Stadt
	B	2	2	Bernau
		4	25	Hennigsdorf
			26	Waidmannslust
BPWA	3/4	3	8	Zeuthen
			85	Grünau
			9	BER Terminal 1-2 ✈
		4	8	Birkenwerder
			85	Pankow
			9	Spandau

BRB	1/2	1	3	Spandau
		2	3	Erkner
BRD	1/2	1	3	Spandau
		2	3	Erkner
BRGT	1	1	2	Blankenfelde
			2	Bernau
BRH	1/2	1	3	Spandau
		2	3	Erkner
BRST	1/2	1	1	Wannsee
		2	1	Oranienburg
BRW	1/2	1	7	Ahrensfelde
		2	7	Potsdam Hbf
BSAL	1/2	1	41	Ring ⟳
			8	Zeuthen
			85	Grünau
		2	42	Ring ⟳
			8	Birkenwerder
			85	Pankow
BSAP	3/4	3	3	Erkner
			5	Strausberg Nord
			7	Ahrensfelde
			9	BER Terminal 1-2 ✈
		4	3	Spandau
			5	Westkreuz
			7	Potsdam Hbf
			9	Spandau
BSC	1/2	1	2	Blankenfelde
		2	2	Bernau
BSCF	3/4	3	45	BER Terminal 1-2 ✈
			46	Königs Wusterhausen
			8	Zeuthen
			85	Grünau
			9	BER Terminal 1-2 ✈
		4	45	Südkreuz
			46	Westend
			8	Birkenwerder
			85	Pankow
			9	Spandau
BSLS	1/2	1	1	Wannsee
		2	1	Oranienburg
BSDE	1/2	1	25	Teltow Stadt
			26	Teltow Stadt
		2	25	Hennigsdorf
			26	Waidmannslust
BSDG	1/2	1	1	Wannsee
		2	1	Oranienburg
BSGR	11/12	11	41	Ring ⟳
			46	Westend
		12	42	Ring ⟳
			46	Königs Wusterhausen
BSGV	1/2	1	1	Wannsee
		2	1	Oranienburg
BSKR	11/12	11	41	Ring ⟳
			45	Ankunft
			46	Westend
		12	42	Ring ⟳
			45	BER Terminal 1-2 ✈
			46	Königs Wusterhausen
BSKV	1/2	1	2	Blankenfelde
			25	Teltow Stadt
			26	Teltow Stadt
		2	2	Bernau
			25	Hennigsdorf
			26	Waidmannslust
BSNF	6/8	6	8	Birkenwerder
		8	8	Zeuthen
BSNH	3/4	3	1	Oranienburg
			25	Hennigsdorf
			26	Waidmannslust
		4	1	Wannsee
			25	Teltow Stadt
			26	Teltow Stadt
BSO	1/2	1	41	Ring ⟳
		2	42	Ring ⟳
BSPA	A	1	3	Ankunft
			3	Erkner
		2	9	Ankunft
			9	BER Terminal 1-2 ✈
BSPF	1	1	47	Ankunft
			47	Hermannstraße
BSPH	20/21	20	7	Potsdam Hbf
			75	Warschauer Straße
		21	7	Ahrensfelde
			75	Wartenberg
BSRW	1/2	1	3	Spandau
			9	Spandau
		2	3	Erkner
			9	BER Terminal 1-2 ✈

BSTN	1	1	5	Ankunft
			5	Westkreuz
BSTO	1/2	1	41	Ring ⟳
			8	Zeuthen
			85	Grünau
		2	42	Ring ⟳
			8	Birkenwerder
			85	Pankow
BSTR	1	1	5	Strausberg Nord
			5	Westkreuz
BSTV	8/9	8	5	Strausberg Nord
			5	Westkreuz
		9	5	Ankunft
			5	Westkreuz
BSW	3/4	3	45	BER Terminal 1-2 ✈
			46	Königs Wusterhausen
			8	Zeuthen
			85	Grünau
			9	BER Terminal 1-2 ✈
		4	47	Spindlersfeld
			47	Ankunft
			47	Spindlersfeld
			85	Ankunft
			85	Pankow
	5/6	5	45	Südkreuz
			46	Westend
			47	Hermannstraße
			8	Birkenwerder
			85	Pankow
			9	Spandau
		6		kein Zugverkehr
BSZF	1	1	25	Teltow Stadt
			25	Hennigsdorf
BTG	1/6	1	25	Hennigsdorf
		6	25	Teltow Stadt
BTGN	3/4	3	3	Erkner
			5	Strausberg Nord
			7	Ahrensfelde
			9	BER Terminal 1-2 ✈
		4	3	Spandau
			5	Westkreuz
			7	Potsdam Hbf
			9	Spandau
BTHF	1/2	1	41	Ring ⟳
			45	Südkreuz
			46	Westend
		2	42	Ring ⟳
			45	BER Terminal 1-2 ✈
			46	Königs Wusterhausen
BTLS	1/2	1	26	Ankunft
			26	Waidmannslust
		2	25	Ankunft
			25	Hennigsdorf
BTOR	1/2	1	1	Wannsee
			2	Blankenfelde
			25	Teltow Stadt
			26	Teltow Stadt
		2	1	Oranienburg
			2	Bernau
			25	Hennigsdorf
			26	Waidmannslust
BTP	A	1	41	Ring ⟳
			85	Grünau
		3	8	Zeuthen
			9	BER Terminal 1-2 ✈
	B	2	42	Ring ⟳
		4	8	Birkenwerder
			85	Pankow
			9	Spandau
BWAB	11/12	11	75	Ankunft
			75	Warschauer Straße
		12	75	Ankunft
			75	Warschauer Straße
BWAF	1/2	1	45	BER Terminal 1-2 ✈
			9	BER Terminal 1-2 ✈
		2	45	Südkreuz
			9	Spandau
BWAI	1/2	1	1	Oranienburg
		2	1	Wannsee
			26	Ankunft
			26	Teltow Stadt
BWED	1/2	1	41	Ring ⟳
		2	42	Ring ⟳

BWES	1/2	1	41	Ring ⟳
			46	Ankunft
		2	42	Ring ⟳
			46	Königs Wusterhausen
BWH		1	41	Ring ⟳
		2	42	Ring ⟳
BWHH	1/2	1	3	Spandau
		2	3	Erkner
BWI	3/4	3	46	Königs Wusterhausen
		4	46	Westend
BWIG	1/2	1	3	Spandau
		2	3	Erkner
BWIN		1	1	Oranienburg
			26	Waidmannslust
		2	1	Wannsee
			26	Teltow Stadt
BWKRR	11/12	11	41	Ring ⟳
			46	Westend
		12	42	Ring ⟳
			46	Königs Wusterhausen
BWKS	A	1	3	Spandau
			7	Potsdam Hbf
			9	Spandau
		2	5	Ankunft
	B	3	5	Strausberg Nord
		4	3	Erkner
			7	Ahrensfelde
			9	BER Terminal 1-2 ✈
BWM	1/2	1	1	Oranienburg
			26	Waidmannslust
		2	1	Wannsee
			26	Teltow Stadt
BWOK	3/4	3	1	Oranienburg
			25	Hennigsdorf
			26	Waidmannslust
		4	1	Wannsee
			25	Teltow Stadt
			26	Teltow Stadt
BWRS	A	1	3	Erkner
			3X	Friedrichshagen
			5	Strausberg Nord
			7	Ahrensfelde
			9	BER Terminal 1-2 ✈
		2	3	Erkner
			5	Mahlsdorf
			75	Wartenberg
	B	3	3	Ostbahnhof
			5	Ostbahnhof
			75	Ankunft
		4	3	Spandau
			3X	Ostbahnhof
			5	Westkreuz
			7	Potsdam Hbf
			9	Spandau
BWSS	A	1	7	Potsdam Hbf
		2	1	Ankunft
	B	3	1	Oranienburg
		4	7	Ahrensfelde
BWT	11/1	11	5	Westkreuz
		1	U5	Alexanderplatz
	12/2	2	U5	Hönow
		12	5	Strausberg Nord
BYOR	1/2	1	2	Blankenfelde
			25	Teltow Stadt
			26	Teltow Stadt
		2	2	Bernau
			25	Hennigsdorf
			26	Waidmannslust
BZD	1/2	1	1	Wannsee
		2	1	Oranienburg
			1	Ankunft
			1	Potsdamer Platz
BZEP	4/6	4	2	Bernau
		6	2	Blankenfelde
BZOS	5/6	5	3	Erkner
			5	Strausberg Nord
			7	Ahrensfelde
			9	BER Terminal 1-2 ✈
		6	3	Spandau
			5	Westkreuz
			7	Potsdam Hbf
			9	Spandau
BZTH	3/4	3	46	Königs Wusterhausen
			8	Ankunft
			8	Birkenwerder
		4	46	Westend

Nachtverkehr				
BADL	3/4	3	46	Königs Wusterhausen
			8	Grünau
			9	BER Terminal 1-2 ✈
		4	46	Südkreuz
			8	Pankow
			9	Spandau
BAF	41/42	41	7	Ankunft
			7	Potsdam Hbf
		42		kein Zugverkehr
BAGL	1/2	1	9	BER Terminal 1-2 ✈
		2	9	Spandau
BAHU	1/2	1		kein Zugverkehr
		2	1	Wannsee
			2	Blankenfelde
			25	Teltow Stadt
	3/4	3	1	Oranienburg
		4	2	Bernau
			25	Hennigsdorf
BALX	3/4	3	7	Ahrensfelde
			9	BER Terminal 1-2 ✈
		4	7	Potsdam Hbf
			9	Spandau
BARF	1	1	25	Teltow Stadt
			25	Hennigsdorf
BATS	1/2	1	2	Blankenfelde
		2	2	Bernau
BBAB	1/2	1	7	Potsdam Hbf
		2	7	Ahrensfelde
BBCH	1/2	1	2	Blankenfelde
		2	2	Bernau
BBDF	1	1	5	Ostbahnhof
		2	5	Mahlsdorf
BBER	1/2	2	2	Ankunft
			2	Blankenfelde
BBEU	1/2	1	41	Ring ⟳
		2	42	Ring ⟳
			42	Halensee
BBEV	3/4	3	7	Ahrensfelde
			9	BER Terminal 1-2 ✈
		4	7	Potsdam Hbf
			9	Spandau
BBFD	3	3	2	Ankunft
			2	Bernau
BBFE	1/2			kein Zugverkehr
BBGT	1/2	1	1	Wannsee
		2	1	Oranienburg
BBIS	1/2	1	5	Mahlsdorf
		2	5	Strausberg Nord
BBIW	4/6	4	1	Oranienburg
		6	1	Wannsee
BBLB	1/4	1	2	Blankenfelde
		4	2	Bernau
BBMW	3/5	3	8	Grünau
			9	BER Terminal 1-2 ✈
		5	46	Königs Wusterhausen
	4	4	46	Südkreuz
			8	Pankow
			9	Spandau
BBOR	1/2	1	1	Oranienburg
		2	1	Wannsee
BBOS	A	1	1	Wannsee
			25	Teltow Stadt
		2	2	Blankenfelde
			8	Grünau
	B	3	2	Bernau
			8	Pankow
		4	1	Oranienburg
			25	Hennigsdorf
BBRF	1	1	2	Bernau
			2	Blankenfelde
BBU	1/2	1	2	Blankenfelde
		2	2	Bernau
BBUP	1/2	1	41	Ring ⟳
			41	Westend
		2	42	Ring ⟳

BCHS	5/6	5		kein Zugverkehr
		6	7	Ahrensfelde
			9	BER Terminal 1-2 ✈
	7/8	7		kein Zugverkehr
		8	7	Potsdam Hbf
			9	Spandau
BE	31/32	31	3	Ankunft
			3	Ostkreuz
		32		kein Zugverkehr
	34	34		kein Zugverkehr
BEBD	2	2	25	Teltow Stadt
			25	Hennigsdorf
BEIW	3/4	3	46	Königs Wusterhausen
		4	46	Südkreuz
BFA	1/2	1	41	Ring ⟳
			8	Grünau
		2	42	Ring ⟳
			8	Pankow
BFB	1/2	1	1	Wannsee
		2	1	Oranienburg
BFD	15/16	15	5	Strausberg Nord
		16	5	Mahlsdorf
BFFO	1/2	1	5	Mahlsdorf
			7	Ahrensfelde
			75	Wartenberg
		2	5	Ostbahnhof
			7	Potsdam Hbf
			75	Lichtenberg
BFBB ✈	5/6	5	9	Ankunft
			9	Spandau
		6		kein Zugverkehr
BFLH ✈	11/13	11	9	BER Terminal 1-2 ✈
		13	9	Spandau
BFOH	1/2	1	1	Oranienburg
		2	1	Wannsee
BFRH	1/2	1	3	Ostkreuz
		2	3	Erkner
BFRU	1/2	1	1	Wannsee
		2	1	Oranienburg
BFST	5/6	5	7	Ahrensfelde
			9	BER Terminal 1-2 ✈
		6	7	Potsdam Hbf
			9	Spandau
BFSTT	11/12	11	1	Wannsee
			2	Blankenfelde
			25	Teltow Stadt
		12	1	Oranienburg
			2	Bernau
			25	Hennigsdorf
BGAS	1/2	1	46	Königs Wusterhausen
		2	8	Ankunft
	3/4	3	8	Pankow
		4	46	Südkreuz
BGB	1/2	1	1	Wannsee
			2	Blankenfelde
			25	Teltow Stadt
		2	42	Ring ⟳
			42	Halensee
	3/4	3	41	Ring ⟳
		4	1	Oranienburg
			2	Bernau
			25	Hennigsdorf
BGBA	1/2	1	9	BER Terminal 1-2 ✈
		2	9	Spandau
BGGS	1/2	1	1	Wannsee
		2	1	Oranienburg
BGRI	1/2	1	7	Potsdam Hbf
		2	7	Ahrensfelde
BGSE	51/52	51	75	Wartenberg
		52	75	Lichtenberg
BGSS	1/2	1	41	Ring ⟳
			8	Grünau
		2	42	Ring ⟳
			8	Pankow
BGWD	1/2	1	7	Potsdam Hbf
		2		kein Zugverkehr
	3/4	3		kein Zugverkehr
		4	7	Ahrensfelde
BHAL	1/2	1	41	Ring ⟳
			41	Ring ⟳
			41	Westend
		2	42	Ring ⟳
			42	Ankunft

BHBF	15/16	15	7	Ahrensfelde
			9	BER Terminal 1-2 ✈
		16	7	Potsdam Hbf
			9	Spandau
BHD	1/5	1	25	Ankunft
			25	Teltow Stadt
		5	25	Ankunft
			25	Teltow Stadt
BHED	1/2	1	1	Oranienburg
		2	1	Wannsee
BHEI	1/2	1	41	Ring ⟳
			41	Westend
		2	42	Ring ⟳
BHER	1/2	1	41	Ring ⟳
			41	Westend
			46	Südkreuz
		2	42	Ring ⟳
			46	Königs Wusterhause
BHGM	1	1	5	Strausberg Nord
			5	Mahlsdorf
BHH	1/2	1	75	Wartenberg
		2	75	Lichtenberg
BHI	1/2	1	3	Ostkreuz
		2	3	Erkner
BHKM	3/4	3	7	Ahrensfelde
			9	BER Terminal 1-2 ✈
		4	7	Potsdam Hbf
			9	Spandau
BHLS	1/2	1	25	Hennigsdorf
		2	25	Teltow Stadt
BHN	3/4	3	1	Oranienburg
		4	1	Wannsee
BHO	1/2	1	41	Ring ⟳
			41	Westend
		2	42	Ring ⟳
BHPG	4/5	4	5	Strausberg Nord
			5	Mahlsdorf
		5		kein Zugverkehr
BHST	1/2	1	9	BER Terminal 1-2 ✈
		2	9	Spandau
BHUM	1/2	1	1	Wannsee
			2	Blankenfelde
			25	Teltow Stadt
		2	1	Oranienburg
			2	Bernau
			25	Hennigsdorf
BIP	1/2	1	41	Ring ⟳
			41	Westend
		2	42	Ring ⟳
BJB	3/4	3	7	Ahrensfelde
			9	BER Terminal 1-2 ✈
		4	7	Potsdam Hbf
			9	Spandau
BJLB	1/2	1	1	Wannsee
		2	1	Oranienburg
BJUN	5/6	5	41	Ring ⟳
		6	42	Ring ⟳
			42	Halensee
BKAD	1/2	1	5	Mahlsdorf
		2	5	Strausberg Nord
BKBO	2	2	25	Teltow Stadt
			25	Hennigsdorf
BKHD	1/2	1	46	Südkreuz
		2	46	Königs Wusterhause
BKLH	11/12	11	3	Ostkreuz
		12	3	Erkner
BKPK	1/2	1	3	Ostkreuz
		2	3	Erkner
BKRW	3/4	3	2	Bernau
		4	2	Blankenfelde
BKW	2	2	46	Ankunft
			46	Südkreuz
BLAK	2	2	25	Teltow Stadt
			25	Hennigsdorf
BLEN	1/2	1	1	Oranienburg
		2	1	Wannsee

BLI	1/2	1	5	Mahlsdorf
			7	Ahrensfelde
			75	**Wartenberg**
		2	5	Ostbahnhof
			7	Potsdam Hbf
			75	**Ankunft**
BLIO	1/2	1	25	Teltow Stadt
		2	25	Hennigsdorf
BLIS	1/2	1	25	Teltow Stadt
		2	25	Hennigsdorf
BLRD	1/2	1	2	Blankenfelde
			2	Bernau
		2		kein Zugverkehr
BLST	1/2	1	41	Ring ⟲
			8	Grünau
		2	42	Ring ⟲
			42	Halensee
			8	Pankow
BLWE	1/2	1	1	Wannsee
		2	1	Oranienburg
BMAH	2/3	2	2	Bernau
		3	2	Blankenfelde
BMAZ	1/2	1	7	Ahrensfelde
		2	7	Potsdam Hbf
BMDF	1/2			kein Zugverkehr
	3/4	3	5	**Ankunft**
			5	**Ostbahnhof**
		4	5	**Ankunft**
			5	**Strausberg Nord**
BMEA	1/2	1	7	Ahrensfelde
		2	7	Potsdam Hbf
BMEX	1/2	1	1	Wannsee
		2	1	Oranienburg
BMF	1/2	1	2	Blankenfelde
		2	2	Bernau
BMM	6	6		kein Zugverkehr
BMN	1/2	1	41	Ring ⟲
			41	Westend
		2	42	Ring ⟲
			42	Halensee
BMS	1/2	1	9	BER Terminal 1-2 ✈
		2	9	Spandau
BNB	1/2	1	1	Wannsee
			2	Blankenfelde
			25	Teltow Stadt
		2		kein Zugverkehr
	3/4	3		kein Zugverkehr
		4	1	Oranienburg
			2	Bernau
			25	Hennigsdorf
BNIS	3/4	3	7	Potsdam Hbf
		4	7	Ahrensfelde
BNIW	1/2	1	1	Wannsee
		2	1	Oranienburg
BNG	1	1	5	Strausberg Nord
			5	Mahlsdorf
BNK	1/2	1	41	Ring ⟲
			41	Westend
			46	Südkreuz
		2	42	Ring ⟲
			46	Königs Wusterhausen
BNPL	1/2	1	5	Mahlsdorf
			7	Ahrensfelde
		2	5	Ostbahnhof
			7	Potsdam Hbf
BOK	F	11	41	Ring ⟲
			41	Westend
			8	Grünau
		12	42	Ring ⟲
			42	Halensee
			8	Pankow
BOKS	D	5	3	Ostbahnhof
			5	Ostbahnhof
		6	7	Potsdam Hbf
	E	3	3	Erkner
			7	Ahrensfelde
		4	5	Mahlsdorf
BOLS	A	1	9	BER Terminal 1-2 ✈
		2	9	Spandau
BORB	A	30	1	**Ankunft**
			1	**Wannsee**
		32		kein Zugverkehr

BORS	1/2	1	1	Wannsee
			2	Blankenfelde
			25	Teltow Stadt
		2	1	Oranienburg
			2	Bernau
			25	Hennigsdorf
BOSB	D	8	7	Ahrensfelde
			9	BER Terminal 1-2✈
		9	5	**Ankunft**
			5	**Mahlsdorf**
	E	10	3	**Ankunft**
			3	**Erkner**
		11	7	Potsdam Hbf
			9	Spandau
BOSP	1	1	47	Spindlersfeld
			47	Schöneweide
BOSS	1/2	1	25	Teltow Stadt
		2	25	Hennigsdorf
BPDH	C	6	7	**Ankunft**
			7	**Ahrensfelde**
		7		kein Zugverkehr
BPEN	1	1	5	Strausberg Nord
			5	Mahlsdorf
BPHD	1/2	1	2	Blankenfelde
		2	2	Bernau
BPIC	1/2	1	9	BER Terminal 1-2 ✈
		2	9	Spandau
BPKW	1/2	1	2	Bernau
			8	**Ankunft**
		2	2	Blankenfelde
			8	**Grünau**
BPLA	1/2	1	41	Ring ⟲
			8	Grünau
		2	42	Ring ⟲
			42	Halensee
			8	Pankow
BPOE	1/2	1	7	Ahrensfelde
		2	7	Potsdam Hbf
BPOP	A	11	1	Wannsee
			2	Blankenfelde
			25	Teltow Stadt
		12		kein Zugverkehr
	B	13		kein Zugverkehr
		14	1	Oranienburg
			2	Bernau
			25	Hennigsdorf
BPRS	A	1	2	Blankenfelde
		3	25	Teltow Stadt
	B	2	2	Bernau
		4	25	Hennigsdorf
BPWA	3/4	3	8	Grünau
			9	BER Terminal 1-2 ✈
		4	8	Pankow
			9	Spandau
BRB	1/2	1	3	Ostkreuz
		2	3	Erkner
BRD	1/2	1	3	Ostkreuz
		2	3	Erkner
BRGT	1	1	2	Blankenfelde
			2	Bernau
BRH	1/2	1	3	Ostkreuz
		2	3	Erkner
BRST	1/2	1	1	Wannsee
		2	1	Oranienburg
BRW	1/2	1	7	Ahrensfelde
		2	7	Potsdam Hbf
BSAL	1/2	1	41	Ring ⟲
			8	Grünau
		2	42	Ring ⟲
			42	Halensee
			8	Pankow
BSAP	3/4	3	7	Ahrensfelde
			9	BER Terminal 1-2 ✈
		4	7	Potsdam Hbf
			9	Spandau
BSC	1/2	1	2	Blankenfelde
		2	2	Bernau
BSCF	3/4	3	46	Königs Wusterhausen
			8	Grünau
			9	BER Terminal 1-2 ✈
		4	46	Südkreuz
			8	Pankow
			9	Spandau

BSLS	1/2	1	1	Wannsee
		2	1	Oranienburg
BSDE	1/2	1	25	Teltow Stadt
		2	25	Hennigsdorf
BSDG	1/2	1	1	Wannsee
		2	1	Oranienburg
BSGR	11/12	11	41	Ring ⟲
			41	Westend
		12	42	Ring ⟲
BSGV	1/2	1	1	Wannsee
		2	1	Oranienburg
BSKR	11/12	11	41	Ring ⟲
			41	Westend
			46	**Ankunft**
		12	42	Ring ⟲
			46	**Königs Wusterhausen**
BSKV	1/2	1	2	Blankenfelde
			25	Teltow Stadt
		2	2	Bernau
			25	Hennigsdorf
BSNF	6/8			kein Zugverkehr
BSNH	3/4	3	1	Oranienburg
			25	Hennigsdorf
		4	1	Wannsee
			25	Teltow Stadt
BSO	1/2	1	41	Ring ⟲
			41	Westend
		2	42	Ring ⟲
BSPA	1/2	1	9	**Ankunft**
			9	**BER Terminal 1-2 ✈**
		2	9	**Ankunft**
			9	**BER Terminal 1-2 ✈**
BSPF	1	1	47	**Ankunft**
			47	**Schöneweide**
BSPH	20/21	20	7	Potsdam Hbf
			75	Lichtenberg
		21	7	Ahrensfelde
			75	Wartenberg
BSRW	1/2	1	9	Spandau
		2	9	BER Terminal 1-2 ✈
BSTN	1	1	5	**Ankunft**
			5	**Mahlsdorf**
BSTO	1/2	1	41	Ring ⟲
			8	Grünau
		2	42	Ring ⟲
			42	Halensee
			8	Pankow
BSTR	1	1	5	Strausberg Nord
			5	Mahlsdorf
BSTV	8/9	8	5	Strausberg Nord
			5	Mahlsdorf
		9		kein Zugverkehr
BSW	3/4	3	46	Königs Wusterhausen
			8	Grünau
			9	BER Terminal 1-2 ✈
		4		kein Zugverkehr
	5/6	5		kein Zugverkehr
		6	46	Südkreuz
			47	**Ankunft**
			47	**Spindlersfeld**
			8	Pankow
			9	Spandau
BSZF	1	1	25	Teltow Stadt
			25	Hennigsdorf
BTG	1/6	1	25	Hennigsdorf
		6	25	Teltow Stadt
BTGN	3/4	3	7	Ahrensfelde
			9	BER Terminal 1-2 ✈
		4	7	Potsdam Hbf
			9	Spandau
BTHF	1/2	1	41	Ring ⟲
			41	Westend
			46	Südkreuz
		2	42	Ring ⟲
			46	Königs Wusterhausen
BTLS	1/2	1		kein Zugverkehr
		2	25	**Ankunft**
			25	**Hennigsdorf**

BTOR	1/2	1	1	Wannsee
			2	Blankenfelde
			25	Teltow Stadt
		2	1	Oranienburg
			2	Bernau
			25	Hennigsdorf
BTP	A	1	41	Ring ⟲
			41	Westend
		3	8	Grünau
			9	BER Terminal 1-2 ✈
	B	2	42	Ring ⟲
			8	Pankow
		4	9	Spandau
BWAB	11/12	11		kein Zugverkehr
		12	75	**Ankunft**
			75	**Lichtenberg**
BWAF	1/2	1	9	BER Terminal 1-2 ✈
		2	9	Spandau
BWAI	1/2	1	1	Oranienburg
		2	1	Wannsee
BWED	1/2	1	41	Ring ⟲
		2	42	Ring ⟲
			42	Halensee
BWES	1/2	1	41	Ring ⟲
			41	**Ankunft**
		2	42	Ring ⟲
			42	**Ring ⟲**
			42	Halensee
BWH		1	41	Ring ⟲
		2	42	Ring ⟲
			42	Westend
BWHH	1/2	1	3	Ostkreuz
		2	3	Erkner
BWI	3/4	3	46	Königs Wusterhausen
		4	46	Südkreuz
BWIG	1/2	1	3	Ostkreuz
		2	3	Erkner
BWIN		1	1	Oranienburg
		2	1	Wannsee
BWKRR	11/12	11	41	Ring ⟲
			41	Westend
		12	42	Ring ⟲
			42	Halensee
BWKS	A	1	7	Potsdam Hbf
			9	Spandau
		2		kein Zugverkehr
	B	3		kein Zugverkehr
		4	7	Ahrensfelde
			9	BER Terminal 1-2 ✈
BWM	1/2	1	1	Oranienburg
		2	1	Wannsee
BWOK	3/4	3	1	Oranienburg
			25	Hennigsdorf
		4	1	Wannsee
			25	Teltow Stadt
BWRS	A	1	3	Erkner
			7	Ahrensfelde
			9	BER Terminal 1-2 ✈
		2	5	Mahlsdorf
	B	3	3	Ostbahnhof
			5	Ostbahnhof
		4	7	Potsdam Hbf
			9	Spandau
BWSS	A	1	7	Potsdam Hbf
		2	1	**Ankunft**
	B	3	1	**Oranienburg**
		4	7	Ahrensfelde
BWT	11/1	11	5	Ostbahnhof
		1	U5	Alexanderplatz
	12/2	2	U5	Hönow
		12	5	Mahlsdorf
BYOR	1/2	1	2	Blankenfelde
			25	Teltow Stadt
		2	2	Bernau
			25	Hennigsdorf
BZD	1/2	1	1	Wannsee
		2	1	Oranienburg
BZEP	4/6	4	2	Bernau
		6	2	Blankenfelde
BZOS	5/6	5	7	Ahrensfelde
			9	BER Terminal 1-2 ✈
		6	7	Potsdam Hbf
			9	Spandau
BZTH	3/4	3	46	Königs Wusterhausen
		4	46	Südkreuz

A	1/2	1	2	Ruhleben
		2	2	Pankow
Ad	1/2	1	7	Rudow
		2	7	Rathaus Spandau
Afr	1/2	1	6	Alt-Mariendorf
		2	6	Alt-Tegel
Al	1/3	1	5	Hauptbahnhof
		3		kein Zugverkehr
	2/4	2	5	Hönow
		4		kein Zugverkehr
Am	1/2	1	9	Rathaus Steglitz
		2	9	Osloer Straße
Ap	1/2	1	8	Hermannstraße
		2	8	Wittenau
AS	1/2	1	7	Rudow
		2	7	Rathaus Spandau
At	1/2	1	6	Alt-Mariendorf
		2	6	Alt-Tegel
Au	1	1	3	Krumme Lanke
	2	2	3	Warschauer Straße
B	1/2	1	8	Hermannstraße
		2	8	Wittenau
Beo	1	1	9	Rathaus Steglitz
	2	2	9	Osloer Straße
Beu	1/2	1	7	Rudow
		2	7	Rathaus Spandau
Bi	1/2	1	9	Rathaus Steglitz
		2	9	Osloer Straße
Bk	1/2	1	6	Alt-Mariendorf
		2	6	Alt-Tegel
Bl	1/2	1	7	Rudow
		2	7	Rathaus Spandau
Bli	1/2	1	7	Rudow
		2	7	Rathaus Spandau
Bmo	1	1	2	Ruhleben
	2	2	2	Pankow
Bmu	1/2	1	7	Rudow
		2	7	Rathaus Spandau
Bo	1/2	1	8	Hermannstraße
		2	8	Wittenau
Bpo	1/2	1	4	Innsbrucker Platz
		2	4	Nollendorfplatz
Bpu	1/2	1	7	Rudow
		2	7	Rathaus Spandau
Br	1/2	1	7	Rudow
		2	7	Rathaus Spandau
BRT	1/2	1	5	Hauptbahnhof
		2	5	Hönow
Bs	1	1	2	Ruhleben
	2	2	2	Pankow
Bt	1/2	1	3	Krumme Lanke
		2	3	Warschauer Straße
Bu	1	1	9	Rathaus Steglitz
	2	2	9	Osloer Straße
Bü	1	1	5	Hauptbahnhof
	2/3	2	5	Hönow
		3	5	**Hauptbahnhof**
BUN	1/2	1	5	Hauptbahnhof
		2	5	Hönow
C	1/2	1	5	Hauptbahnhof
		2	5	Hönow
Dd	1/2	1	3	Krumme Lanke
		2	3	Warschauer Straße
E	1/2	1	5	Hauptbahnhof
		2	5	Hönow
EB	1/2	1	2	Ruhleben
		2	2	Pankow
Ei	1/2	1	7	Rudow
		2	7	Rathaus Spandau
F	1/2	1	6	Alt-Mariendorf
		2	6	Alt-Tegel
Ff	1/2	1	5	Hauptbahnhof
		2	5	Hönow

Fi	1/2	1	5	Hauptbahnhof
		2	5	Hönow
FN	1/2	1	8	Hermannstraße
		2	8	Wittenau
Fpo	1/2	1	3	Krumme Lanke
		2	3	Warschauer Straße
Fpu	1/2	1	7	Rudow
		2	7	Rathaus Spandau
Ft	1/2	1	5	Hauptbahnhof
		2	5	Hönow
Fw	1/2	1	9	Rathaus Steglitz
		2	9	Osloer Straße
Gb	1/2	1	8	Hermannstraße
		2	8	Wittenau
GK	1/2	1	5	Hauptbahnhof
		2	5	Hönow
Go	1/2	1	1	Uhlandstraße
		3		Krumme Lanke
		2	1	Warschauer Straße
		3		Warschauer Straße
Gr	1	1	1	Uhlandstraße
		3		Krumme Lanke
	2	2	1	Warschauer Straße
		3		Warschauer Straße
Gs	1/2	1	7	Rudow
		2	7	Rathaus Spandau
Gt	1/2	1	9	Rathaus Steglitz
		2	9	Osloer Straße
Gu	1/2	1	2	Ruhleben
		2	2	Pankow
Gz	1/2	1	7	Rudow
		2	7	Rathaus Spandau
Ha	1/2	1	9	Rathaus Steglitz
		2	9	Osloer Straße
Hb	1/2	1	3	Krumme Lanke
		2	3	Warschauer Straße
HBF	1/2	1	5	**Ankunft**
		2	5	**Hönow**
Hd	1/2	1	5	Hauptbahnhof
		2	5	Hönow
He	1/2	1	8	Hermannstraße
		2	8	Wittenau
Hh	1/2	1	6	Alt-Mariendorf
		2	6	Alt-Tegel
Hl	1/2	1	7	Rudow
		2	7	Rathaus Spandau
HMS	1/2	1	8	**Ankunft**
		8		**Wittenau**
		2	8	**Ankunft**
		8		**Wittenau**
Ho	1	1	1	Uhlandstraße
		3		Krumme Lanke
	2	2	1	Warschauer Straße
		3		Warschauer Straße
Hö	1/2	1	5	**Ankunft**
		5		**Hauptbahnhof**
		2	5	**Ankunft**
		5		**Hauptbahnhof**
	3	3	5	kein Zugverkehr
Hpo	1/2	1	8	Hermannstraße
		2	8	Wittenau
Hpu	1/2	1	7	Rudow
		2	7	Rathaus Spandau
Hs	1/2	1	7	Rudow
		2	7	Rathaus Spandau
Hu	1/2	1	6	Alt-Mariendorf
		2	6	Alt-Tegel
Hv	1/2	1	2	Ruhleben
		2	2	Pankow
Hz	1/2	1	3	Krumme Lanke
		2	3	Warschauer Straße
Ip	1/2	1	4	**Ankunft**
		4		**Nollendorfplatz**
		2	4	**Ankunft**
		4		**Nollendorfplatz**

Jho	1/3	1	7	Rudow
		3		kein Zugverkehr
Jhu	2/4	2	7	Rathaus Spandau
		4		kein Zugverkehr
JK	1/2	1	7	Rudow
		2	7	Rathaus Spandau
Jn	1/2	1	8	Hermannstraße
		2	8	Wittenau
Jt	1/2	1	7	Rudow
		2	7	Rathaus Spandau
K	1/2	1	3	**Ankunft**
		3		**Warschauer Straße**
		2	3	**Ankunft**
		3		**Warschauer Straße**
Ka	1/2	1	6	Alt-Mariendorf
		2	6	Alt-Tegel
KB	1/2	1	8	Hermannstraße
		2	8	Wittenau
Kbo	1/2	1	1	Uhlandstraße
		3		Krumme Lanke
		2	1	Warschauer Straße
		3		Warschauer Straße
Kbu	1/2	1	8	Hermannstraße
		2	8	Wittenau
Kd	1	1	2	Ruhleben
	2	2	2	Pankow
Kfo	1	1	1	Uhlandstraße
	2	2	1	Warschauer Straße
Kfu	1/2	1	9	Rathaus Steglitz
		2	9	Osloer Straße
KL	1/2	1	5	Hauptbahnhof
		2	5	Hönow
KM	1/2	1	7	Rudow
		2	7	Rathaus Spandau
Kn	1/2	1	7	Rudow
		2	7	Rathaus Spandau
Ko	1/2	1	2	Ruhleben
		2	2	Pankow
Ks	1/2	1	6	Alt-Mariendorf
		2	6	Alt-Tegel
Kt	1/2	1	7	Rudow
		2	7	Rathaus Spandau
Kus	1/2	1	1	Uhlandstraße
		3		Krumme Lanke
		2	1	Warschauer Straße
		3		Warschauer Straße
L	1/2	1	8	Hermannstraße
		2	8	Wittenau
La	1/2	1	7	Rudow
		2	7	Rathaus Spandau
LD	1	1	8	Hermannstraße
	2	2	8	Wittenau
Li	1/2	1	5	Hauptbahnhof
		2	5	Hönow
LL	1/2	1	5	Hauptbahnhof
		2	5	Hönow
Lpo	1	1	6	Alt-Mariendorf
	2	2	6	Alt-Tegel
Lpu	1/2	1	9	Rathaus Steglitz
		2	9	Osloer Straße
Lu	1/2	1	2	Ruhleben
		2	2	Pankow
MB	1	1	2	Ruhleben
	2	2	2	Pankow
Md	1/2	1	5	Hauptbahnhof
		2	5	Hönow
Me	1/3	1	6	Alt-Mariendorf
		3	7	Rudow
	2/4	2	6	Alt-Tegel
		4	7	Rathaus Spandau
Mf	1/2	1	6	**Ankunft**
		6		**Alt-Tegel**
		2	6	**Ankunft**
		6		**Alt-Tegel**
MH	1/2	1	2	Ruhleben
		2	2	Pankow
Mi	1/2	1	2	Ruhleben
		2	2	Pankow
Mic	1/2	1	6	Alt-Mariendorf
		2	6	Alt-Tegel

Mk	1/2	1	2	Ruhleben
		2	2	Pankow
Mo	1	1	1	Uhlandstraße
		3		Krumme Lanke
	2	2	1	Warschauer Straße
		3		Warschauer Straße
Mp	1/2	1	7	Rudow
		2	7	Rathaus Spandau
Mr	1/2	1	8	Hermannstraße
		2	8	Wittenau
Mu	1/2	1	7	Rudow
		2	7	Rathaus Spandau
MUI	1/2	1	5	Hauptbahnhof
		2	5	Hönow
NA	1/2	1	6	Alt-Mariendorf
		2	6	Alt-Tegel
Nd	1/2	1	2	Ruhleben
		2	2	Pankow
Nk	1/2	1	7	Rudow
		2	7	Rathaus Spandau
Nm	2/4	2	1	Warschauer Straße
		3		Warschauer Straße
		3		**Ankunft**
		4	4	**Ankunft**
		4		**Innsbrucker Platz**
No	1	1	2	Ruhleben
	2	2	2	Pankow
Np	1/2	1	9	Rathaus Steglitz
		2	9	Osloer Straße
Nu	1/3	1	1	Uhlandstraße
		3		Krumme Lanke
		3	3	**Krumme Lanke**
Ob	1/2	1	6	Alt-Mariendorf
		2	6	Alt-Tegel
Obi	1/3	1	2	Ruhleben
		3		kein Zugverkehr
	2/4	2	2	Pankow
		4		kein Zugverkehr
Olo	1/2	1	9	**Rathaus Steglitz**
		2	9	**Ankunft**
Olu	1/2	1	8	Hermannstraße
		2	8	Wittenau
Os	1/2	1	3	Krumme Lanke
		2	3	Warschauer Straße
Ot	1/2	1	3	Krumme Lanke
		2	3	Warschauer Straße
OTI	1/2	1	6	Alt-Mariendorf
		2	6	Alt-Tegel
P	1/2	1	7	Rudow
		2	7	Rathaus Spandau
PA	1/2	1	2	**Ruhleben**
		2	2	**Ankunft**
PB	1/2	1	8	Hermannstraße
		2	8	Wittenau
Pd	1/2	1	2	Ruhleben
		2	2	Pankow
Pi	1/2	1	7	Rudow
		2	7	Rathaus Spandau
Pk	1/2	1	8	Hermannstraße
		2	8	Wittenau
PL	1/2	1	6	Alt-Mariendorf
		2	6	Alt-Tegel
Po	1/2	1	3	Krumme Lanke
		2	3	Warschauer Straße
Pr	1	1	1	Uhlandstraße
		3		Krumme Lanke
	2	2	1	Warschauer Straße
		3		Warschauer Straße
Ps	1/2	1	6	Alt-Mariendorf
		2	6	Alt-Tegel
R	1/2	1	7	**Ankunft**
		2	7	**Rathaus Spandau**
Rb	1/2	1	6	Alt-Mariendorf
		2	6	Alt-Tegel
Rd	1/2	1	3	Krumme Lanke
		2	3	Warschauer Straße
RE	1/2	1	8	Hermannstraße
		2	8	Wittenau
RHO	1	1	5	Hauptbahnhof
	2	2	5	Hönow
Ri	1/2	1	6	Alt-Mariendorf
		2	6	Alt-Tegel
Rk	1/2	1	7	Rudow
		2	7	Rathaus Spandau

Rl	1/2	1	2	**Ankunft**
		2		**Pankow**
		2	2	**Ankunft**
		2		**Pankow**
Rm	1/2	1	7	Rudow
		2	7	Rathaus Spandau
Ro	1/2	1	8	Hermannstraße
		2	8	Wittenau
RP	1	1	2	Ruhleben
	2	2	2	Pankow
RR	1/2	1	8	Hermannstraße
		2	8	Wittenau
RS	1/2	1	4	Innsbrucker Platz
		2	4	Nollendorfplatz
RSp	1/3	1	7	**Rudow**
		3		kein Zugverkehr
	2/4	2	7	**Ankunft**
		4		kein Zugverkehr
Rw	1/2	1	7	Rudow
		2	7	Rathaus Spandau
Rzu	1/2	1	9	**Ankunft**
		2	9	**Osloer Straße**
S	1	1	1	Uhlandstraße
		3		Krumme Lanke
	2	2	1	Warschauer Straße
		3		Warschauer Straße
Sa	1/2	1	5	Hauptbahnhof
		2	5	Hönow
Sch	1/2	1	6	Alt-Mariendorf
		2	6	Alt-Tegel
Scha	1/2	1	6	Alt-Mariendorf
		2	6	Alt-Tegel
Sd	1/3	1	2	Ruhleben
		3	2	**Ankunft**
		2		**Pankow**
	2	2	2	Pankow
Se	1/3	1	6	Alt-Mariendorf
		3	6	**Ankunft**
		6		**Alt-Mariendorf**
	2	2	6	Alt-Tegel
Sh	1/2	1	2	Ruhleben
		2	2	Pankow
Si	1/2	1	5	Hauptbahnhof
		2	5	Hönow
Sie	1/2	1	7	Rudow
		2	7	Rathaus Spandau
SK	1/2	1	6	Alt-Mariendorf
		2	6	Alt-Tegel
Slo	2/4	2	9	Osloer Straße
		4		kein Zugverkehr
Slu	1/3	1	9	Rathaus Steglitz
		3		kein Zugverkehr
Sno	1	1	3	Krumme Lanke
	2	2	3	Warschauer Straße
Snu	1/2	1	9	Rathaus Steglitz
		2	9	Osloer Straße
So	1	1	2	Ruhleben
	2	2	2	Pankow
Sp	1/2	1	2	Ruhleben
		2	2	Pankow
Sr	1/2	1	5	Hauptbahnhof
		2	5	Hönow
ST	1/2	1	8	Hermannstraße
		2	8	Wittenau
Sü	1/2	1	7	Rudow
		2	7	Rathaus Spandau
Sz	1/2	1	2	Ruhleben
		2	2	Pankow
T	1/2	1	3	Krumme Lanke
		2	3	Warschauer Straße
Tg	1/2	1	6	**Ankunft**
		6		**Alt-Mariendorf**
		2	6	**Ankunft**
		6		**Alt-Mariendorf**
Th	1	1	2	Ruhleben
		2		**Ankunft**
	2	2	2	**Pankow**
		2		Pankow
Tk	1/2	1	5	Hauptbahnhof
		2	5	Hönow

Tm	1/2	1	9	Rathaus Steglitz
		2	9	Osloer Straße
Ts	1/2	1	6	Alt-Mariendorf
		2	6	Alt-Tegel
U	1/2	1	1	**Ankunft**
		2	1	**Warschauer Straße**
ULO	1	1	6	Alt-Mariendorf
	2	2	6	Alt-Tegel
Ull	1/2	1	6	Alt-Mariendorf
		2	6	Alt-Tegel
ULU	1/2	1	5	Hauptbahnhof
		2	5	Hönow
V	1/2	1	4	Innsbrucker Platz
		2	4	Nollendorfplatz
VIN	1/2	1	2	Ruhleben
		2	2	Pankow
Vo	1/2	1	8	Hermannstraße
		2	8	Wittenau
W	1/2	1	8	Hermannstraße
		2	8	Wittenau
WA	1/2	1	1	**Ankunft**
		1		**Uhlandstraße**
		3		**Ankunft**
		3		**Krumme Lanke**
		2	1	**Ankunft**
		1		**Uhlandstraße**
		3		**Ankunft**
		3		**Krumme Lanke**
	3	3	1	bei Veranstaltungen
Wd	1/2	1	7	Rudow
		2	7	Rathaus Spandau
We	1/2	1	6	Alt-Mariendorf
		2	6	Alt-Tegel
WF	1/2	1	9	Rathaus Steglitz
		2	9	Osloer Straße
Wh	11/1	11	S5	Westkreuz
		1	5	Hauptbahnhof
	12/2	2	5	Hönow
		12	S5	Strausberg Nord
WIU	1/2	1	8	**Hermannstraße**
		2	8	**Ankunft**
Wk	1/2	1	7	Rudow
		2	7	Rathaus Spandau
Wl	1/2	1	6	Alt-Mariendorf
		2	6	Alt-Tegel
WR	1/2	1	5	Hauptbahnhof
		2	5	Hönow
Wsg	1/2	1	9	Rathaus Steglitz
		2	9	Osloer Straße
Wt	I	1	1	Uhlandstraße
		3		Krumme Lanke
		3	2	Ruhleben
	II	2	2	Pankow
		4	3	Warschauer Straße
	III	6	1	Warschauer Straße
Y	1/2	1	7	Rudow
		2	7	Rathaus Spandau
Zd	1/2	1	7	Rudow
		2	7	Rathaus Spandau
Zi	1	1	7	Rudow
	2	2	7	Rathaus Spandau
Zo	1	1	2	Ruhleben
	2	2	2	Pankow
Zu	1/2	1	9	Rathaus Steglitz
		2	9	Osloer Straße

Bahnhof	Kürzel DB	Kürzel S	Kürzel U	Tagesverkehr	Nachtverkehr Fr/Sa + Sa/So	Nachtverkehr sonstige
Adenauerplatz			Ad	U7 M19 M29 X10 109 110 310	U7 M19 M29 N10	N7 M19 M29 N10
Adlershof		BADL		S45 S46 S8 S85 S9 M17 61 63 162 163 164 260	S46 S8 S9 M17 N60 N64 N68	M17 N60 N64 N68
Afrikanische Straße			Afr	U6 221	U6	N6
Ahrensfelde	BAHR	BAF		RB26 S7 197 390 901	S7 N97	N97
Ahrensfelde Friedhof	BAFR			RB26 390 901		
Ahrensfelde Nord	BAFN			RB26		
Albrechtshof	BAS			RB10 RB14 237		
Alexanderplatz	BALE	BALX	A, Al, Ap	RE1 RE2 RE7 RB14 S8 S85 S7 S9 U2 U5 U8 M2 M4 M5 M6 100 200 248 300	S7 S9 U2 U5 U8 M2 M4 M5 N40 N42 N60 N65	N2 N6 N8 M2 M4 M5 N40 N42 N60 N65
Altstadt Spandau			AS	U7 X33	U7	N7
Alt-Mariendorf			Mf	U6 M76 M77 X71 X76 179 181 277	U6 M76 M77 N77	N6 M76 M77 N77
Alt-Reinickendorf		BARF	⇒ PB	S25 ⇒ U8 120 122 320 322	S25 ⇒ U8 N20	⇒ N8 N20
Alt-Tegel		⇒ BTG	Tg	U6 124 125 133 220 222 ⇒ S25	U6 N22 N24 N25 N33 ⇒ S25	N6 N22 N24 N25 N33
Alt-Tempelhof			At	U6 M46 140 184 246	U6 M46 N84	N6 M46 N84 N7X
Altglienicke		BAGL		S45 S9 160 ⇒ 363	S9	
Amrumer Straße			Am	U9 142 221	U9	N9
Anhalter Bahnhof		BAHU		S1 S2 S25 S26 M29 M41	S1 S2 S25 M29 M41	M29 M41
Attilastraße		BATS ⇒ BSDE		S2 184 282 ⇒ S25 S26	S2 N84 ⇒ S25	N84
Augsburger Straße			Au	U3	U3	
Babelsberg		BBAB		S7 94 99 601 602 616 619 690 693 694 715 750	S7 N13 N14 N17	N13 N14 N17
Bad Saarow	BBSP			RB36 430 431		
Bad Saarow Klinikum	BBSK			RB36 ⇒ 430 431		
Basdorf	BBAS			RB27 ⇒ 891		
Baumschulenweg		BBMW		S45 S46 S47 S8 S85 S9 170 265 365	S46 S8 S9 N70	N70
Bayerischer Platz			Bpo, Bpu	U4 U7 ⇒ M46	U7 ⇒ M46	N7 ⇒ M46
Beelitz-Heilstätten	BBEL			RE7 645		
Beelitz Stadt	BBZS			RB33 ⇒ X43 642 643 644 645 647		
Bellevue		BBEV		S3 S5 S7 S9	S7 S9	
BER Terminal 1-2 ✈	BFBI	BFBB		FEX RE7 RB14 RB22 S45 S9 X7 X71 263 734 735 736 743	S9 N7 N36 N60	N7 N36 N60 N7X
BER Terminal 5 ✈	BFHS	BFLH		S45 S9 X7 X71 163 164 171 743 744	S9 N7 N60	N7 N60 N7X
Bergfelde		BBFE		S8 809		
Berliner Straße			Beo, Beu	U7 U9 M43 143	U7 U9 M43 N43	N7 N9 M43 N43 N7X
Bernau	BBRN	BBER		DB RE3 RE24 S2 868 869 870 890 891 892 894 895 896 897 898 899 901 907 908 909	S2	
Bernau-Friedenstal		BBRF		S2 ⇒ 868 891 901	S2	
Bernauer Straße			B	U8 M10 247	U8 M10	N8 M10
Bestensee	BBST			RB24 724 726		
Betriebsbahnhof Rummelsburg		BRB		S8 ⇒ 194	S8	
Beusselstraße		BBEU		S41 S42 S46 106 123	S41 S42 N26	N26
Biesdorf		BBDF		S5 192	S5	
Biesdorf-Süd			Bü	U5	U5	
Biesenthal	WBT			RB24 907 909 913		
Birkengrund	BBGN			RE4 701 710 720		
Birkenstein		BBIS		S5 941	S5	
Birkenstraße			Bi	U9 ⇒ M27	U9 ⇒ M27	N9 ⇒ M27
Birkenwerder	BBI	BBIW		RB20 S1 S8	S1	
Bismarckstraße			Bmo, Bmu	U2 U7 ⇒ 109	U2 U7	N2 N7
Blankenburg		BBLB		S2 S8 150 154	S2	
Blankenfelde	BBF	BBFD		RE5 RE7 S2 704 713 720 792 793 794 797	S2	
Blaschkoallee			Bl	U7 170 ⇒ 171	U7	⇒ N7
Blissestraße			Bli	U7 101 143 249 310	U7 N43	N7 N43
Blumberg	BBLU			RB26 895 899 901		
Blumberg-Rehhahn	BAHH			RB26		
Boddinstraße			Bo	U8 M43 166	U8 M43	N8 M43
Borgsdorf		BBOR		S1 S16	S1	
Bornholmer Straße		BBOS		S1 S2 S25 S26 S8 S85 M13 50	S1 S2 S25 S8 M13	M13
Borsigwerke			Bk	U6 133	U6	N6
Botanischer Garten		BBGT		S1 188 ⇒ M48	S1 N88 ⇒ M48	N88 ⇒ M48
Brandenburger Tor		BTOR	BRT	S1 S2 S25 S26 U5 100 ⇒ 300	S1 S2 S25 U5	N5
Breitenbachplatz			Bt	U3 101 248 282	U3	N3
Brieselang	BBRI			RB10 RB14 649 656 657 667		
Britz-Süd			Br	U7 M46 181	U7 M46	M46 ⇒ N7
Buch		BBU		S2 150 158 259 353 891 893	S2 N58	N58
Buckower Chaussee		BBCH		S2 M11 X11 277 710 711	S2 M11	M11
Bülowstraße			Bs ⇒ Kus	U2 M19 M48 M85 106 187 ⇒ U1 U3	U2 M19 M48 ⇒ U1	N1 N2 M19 M48
Bundesplatz		BBUP	Bu	S41 S42 S46 U9 248	S41 S42 U9	N9
Bundestag			BUN	U5 ⇒ 100	U5	
Caputh-Geltow	BCAP			RB23		
Caputh Schwielowsee	BSIS			RB23 607		
Charlottenburg	BCHB	BCHS	⇒ Wd	RE1 RE7 RB14 RB21 RB22 S3 S5 S7 S9 X49 109 309 310 ⇒ U7 M49 X34	S7 S9 ⇒ U7 M49	N7 ⇒ M49
Cottbusser Platz			C	U5 195	U5	N5
Dabendorf	BDAB			RE5 RE7 716 789 791 ⇒ 701 714		
Dahlem-Dorf			Dd	U3 M11 X83 ⇒ 110	U3 M11 ⇒ N10	N3 M11 ⇒ N10
Dahlewitz	BDT			RE6 RE7 713 792		
Dallgow-Döberitz	BDL			RE4 RB13 653 655 663 670		
Deutsche Oper			Obi	U2 ⇒ 101	U2	N2
Eberswalde Hbf	WE			RE3 RE66 RB24 861 862 863 883 913 916 918 919 921		
Eberswalder Straße			EB	U2 M1 M10 12	U2 M1 M10	N2 M1 M10
Eichborndamm		BEBD		S25 221 322	S25	
Eichwalde		BEIW		S46 S8 731 738	S46	
Eisenacher Straße			Ei	U7 ⇒ M46	U7 ⇒ M46	N7 ⇒ M46
Elstal	BETN			RE4 RB13 662 668		
Elsterwerdaer Platz			E	U5 X69 108 154 169 190 398	U5 N69	N69
Erkner	BERK	BE		RE1 S8 161 418 420 424 428 429 436 950	S8	
Ernst-Reuter-Platz			RP	U2 M45 245	U2 M45	N2 M45
Falkensee	BFKS			RE2 RE6 RB10 RB14 X37 604 651 652 653 654 655 656		

Bahnhof	Kürzel DB	Kürzel S	Kürzel U	Tagesverkehr	Nachtverkehr Fr/Sa + Sa/So	Nachtverkehr sonstige
Fangschleuse	BFS			RE1 Bus 429 436		
Fehrbelliner Platz			Fpo, Fpu	U3 U7 Bus 101 115 143	U3 U7 NachtBus N43	N3 N7 NachtBus N43
Ferch-Lienewitz	BFLZ			RB28		
Feuerbachstraße		BFB		S1 M76 X76 Bus 181	S1 M76 NachtBus N81	M76 NachtBus N81
Finkenkrug	BFIN			RB10 RB14 Bus 653 656		
Frankfurter Allee		BFA	Ff	S41 S42 S8 S85 U5 M13 Tram 16	S41 S42 S8 U5 M13	N5 M13
Frankfurter Tor			Ft	U5 M10 Tram 21	U5 M10	N5 M10
Franz-Neumann-Platz (Am Schäfersee)			FN	U8 Bus 128 250 327	U8	N8
Fredersdorf		BFD		S5 Bus 933 948 949 951	S5	
Freie Universität (Thielplatz)			T	U3 Bus 110	U3	N3
Friedenau		BFRU		S1 ⇒ Bus 143 187	S1	
Friedersdorf	BFDF			RB36 Bus 722 723		
Friedrichsfelde			Fi	U5 Bus 194 296 396	U5 NachtBus N50	NachtBus N50
Friedrichsfelde Ost		BFFO		S5 S7 S75 M17 Tram 27 37 Bus 192 194	S5 S7 S75 M17	M17
Friedrichshagen		BFRH		S8 Bus 60 61 88	S8 NachtBus N65	NachtBus N65
Friedrichstraße	BFRI	BFST, BFSTT	F	RE1 RE2 RE7 RB14 RB21 RB22 S1 S2 S25 S26 S3 S5 S7 S9 U6 M1 Tram 12 Bus 147	S1 S2 S25 U6 S7 S9 M1	N6 M1
Friedrich-Wilhelm-Platz			Fw	U9 M76 Bus 186 246	U9	N9
Frohnau		BFOH		S1 Bus 125 220	S1 NachtBus N20	NachtBus N20
Fürstenwalde	BFUW			RE1 RB36 Bus 403 411 412 413 414 430 431 432 433 434 435 436		
Fürstenwalde Süd	BFUS			RB36 Bus 403 411 413 431 435		
Gartenfeld [außer Betrieb]		BGTF		⇒ X33 Bus 133	⇒ NachtBus N33	⇒ NachtBus N33
Gehrenseestraße		BGSE		S75 Bus 294	S75 NachtBus N56	NachtBus N56
Gesundbrunnen	BGS	BGB	Gb	DB RB3 RB5 RB6 S1 S2 S25 S26 S41 S42 S46 U8 Bus 247	S1 S2 S25 S41 S42 U8	N8
Gleisdreieck			Go, Gu	U1 U2 U3	U1 U2	
Gneisenaustraße			Gs	U7 Bus 140 248	U7	N7
Görlitzer Bahnhof			Gr	U1 U3 M29	U1 M29	N1 M29
Greifswalder Straße		BGSS		S41 S42 S8 S85 M4 Bus 158	S41 S42 S8 M4	M4
Grenzallee			Gz	U7 Bus 171	U7	N7
Griebnitzsee	BGBS	BGRI		RB21 RB22 S7 Bus 616 694 696	S7 NachtBus N17	NachtBus N17
Großbeeren	BGSB			RE4 Bus 703 710 711		
Großgörschenstraße		BGGS ⇒ BYOR ⇒ Y		S1 M19 ⇒ S2 S25 S26 U7	S1 M19 ⇒ S2 S25 U7	N7 M19
Groß Köris	BTPI			RB24 Bus 477 726 727		
Groß Schönebeck	BGSK			RB27 Bus 904 905		
Grünau		BGAS		S46 S8 S85 Tram 68 Bus 163 263 363	S46 S8 NachtBus N62 N68	NachtBus N62 N68
Grünbergallee		BGBA		S45 S9 ⇒ 160 163	S9	
Grüneberg	WGRG			RB12 Bus 832		
Grunewald		BGWD		S7 M19 Bus 186 349	S7	
Güntzelstraße			Gt	U9	U9	N9 NachtBus N7X
Hackescher Markt		BHKM		S3 S5 S7 S9 M1 M4 M5 M6	S7 S9 M1 M4 M5 NachtBus N42	NachtBus N42
Halemweg			Hl	U7 Bus 123	U7	⇒ N7
Halensee		BHAL		S41 S42 S46 M19 M29 X10 Bus 143	S41 S42 M19 M29 NachtBus N43	M19 M29 NachtBus N43
Hallesches Tor			Ho, Hu	U1 U3 U6 M41 Bus 248	U1 U6 M41 NachtBus N42	N1 NachtBus N42 ⇒ N6
Hangelsberg	BHGB			RE1 Bus 436		
Hansaplatz			Ha	U9 Bus 106	U9 NachtBus N26	NachtBus N26 ⇒ N9
Haselhorst			Hs	U7 M36 X33 Bus 133	U7 M36 NachtBus N33	N7 M36 NachtBus N33
Hauptbahnhof	BLS, BL	BHBF	HBF	DB RE1 RE2 RE3 RE4 RE5 RE7 RB10 RB14 RB21 RB22 S3 S5 S7 S9 U5 M5 M8 M10 M41 M85 TXL Bus 120 123 142 147 245	S7 S9 U5 M10 M41 NachtBus N20 N40	N5 M10 M41 NachtBus N20 N40
Hausvogteiplatz			Hv	U2 ⇒ Bus 147 200 265	U2	⇒ N2
Heerstraße		BHST		S3 S9 M49 X34 X49 Bus 218 349	S9 M49	M49
Hegermühle		BHGM		S5 ⇒ Tram 89 Bus 885 923 926 927 929 931 937 955 966	S5	
Heidelberger Platz		BHEI	Hb	S41 S42 S46 U3 Bus 249 310	S41 S42 U3	N3
Heiligensee		BHLS		S25 Bus 124	S25 NachtBus N24	NachtBus N24
Heinrich-Heine-Straße			He ⇒ Mk	U8 Bus 165 265 ⇒ U2 Bus 147	U8 NachtBus N60 N65 ⇒ U2	N8 NachtBus N60 N65
Hellersdorf			Hd	U5 M6 Tram 18 X54 Bus 195	U5 M6	N5 M6
Hennigsdorf	BHND	BHD		RB3 RB20 RB55 S25 Bus 136 651 807 808 809 811 824 ⇒ Bus 814	S25	
Hermannplatz			Hpo, Hpu	U7 U8 M29 M41 Bus 171 194	U7 U8 M29 M41 NachtBus N94	N7 N8 M29 M41 NachtBus N94
Hermannstraße		BHER	HMS	S41 S42 S45 S46 S47 U8 M44 Bus 246 277 377	S41 S42 S46 U8 M44 NachtBus N77	N8 M44 NachtBus N77
Hermsdorf		BHED		S1 Bus 326 806 809	S1 NachtBus N25	NachtBus N25
Herrensee	BHE			RB26		
Hirschgarten		BHI		S3 ⇒ Tram 60	S3 ⇒ NachtBus N65	⇒ NachtBus N65
Hohen Neuendorf		BHN		S1 S8 Bus 809 822	S1	
Hohen Neuendorf West	BHOW			RB20 ⇒ Bus 822		
Hohenschönhausen	BHSH	BHH		RB12 RB24 S75 M4 M17 X54 Bus 154 197 256 893	S75 M4 NachtBus N56	M4 NachtBus N56
Hohenzollerndamm		BHO		S41 S42 S46 Bus 115	S41 S42 NachtBus N10	N3 NachtBus N10
Hohenzollernplatz			Hz	U3 Bus 249	U3	N3
Holzhauser Straße			Hh	U6 X33 Bus 133	U6 NachtBus N33	N6 NachtBus N33
Hönow			Hö	U5 Bus 395 941 943	U5	N5
Hoppegarten		BHPN		S5 Bus 940 942 943 944 945	S5	
Humboldthain		BHUM		S1 S2 S25 S26 Bus 247 ⇒ M27	S1 S2 S25 ⇒ M27	⇒ M27
Innsbrucker Platz (Hauptstraße)		BIP	Ip	S41 S42 S46 U4 M48 M85 Bus 143 187 248	S41 S42 M48	M48
Jakob-Kaiser-Platz			JK	U7 M21 X21 Bus 109 123	U7 M21	N7 M21
Jannowitzbrücke		BJB	Jn	S3 S5 S7 S9 U8 Bus 300	S7 S9 U8 NachtBus N40 N60 N65	N8 NachtBus N40 N60 N65
Johannisthal		BSCF		S45 S46 S8 S85 S9	S46 S8 S9	
Johannisthaler Chaussee (Gropiusstadt)			Jt	U7 M11 X11 X71 Bus 172 744	U7 M11	M11 ⇒ N7
Julius-Leber-Brücke		BJLB		S1 M43 Bus 106 204 ⇒ M48 M85 Bus 187	S1 M43 ⇒ M48	M43 ⇒ M48
Jungfernheide	BJUF	BJUN	Jho, Jhu	RE1 RE6 RB10 RB13 S41 S42 S46 U7 M21 M27 X21 Bus 109	S41 S42 U7 M21 M27	N7 M21 M27
Kablow	BKAB			RB36 ⇒ Bus 723		
Kaiserdamm		⇒ BMN	Kd	U2 Bus 139 ⇒ S41 S42 S46 M49 X34 X49 Bus 218	U2 ⇒ S41 S42 M49	N2 ⇒ M49
Kaiserin-Augusta-Straße			Ka	U6 Bus 184	U6	N6
Karl-Bonhoeffer-Nervenklinik		BKBO	KB	S25 U8 M21 X21 ⇒ Bus 322	S25 U8 M21	N8 M21
Karl-Marx-Straße			KM	U7	U7	N7
Karlshorst	BKH	BKLH		S3 M17 Tram 27 37 Bus 296 396	S3 M17	M17
Karow	BKAR	BKRW		RB27 S2 Bus 350	S2	
Kaulsdorf		BKAD		S5 Bus 197 269 399	S5 NachtBus N64 N95	NachtBus N64 N95

Bahnhof	Kürzel DB	Kürzel S	Kürzel U	Tagesverkehr	Nachtverkehr Fr/Sa + Sa/So	Nachtverkehr sonstige
Kaulsdorf-Nord			KL	U5 191 197 269 291	U5 N91	N5 N91
Kienberg (Gärten der Welt)			GK	U5 197	U5	N5
Klandorf	BKLD			RB27 ⇒ 902 905		
Kleistpark			Kt	U7 M48 M85 106 187 204	U7 M48	N7 M48
Klosterfelde	BKLF			RB27 897 902		
Klosterstraße			Ko	U2 ⇒ 300	U2 ⇒ N40 N42	⇒ N8 N40 N42
Kochstraße (Checkpoint Charlie)			Ks	U6 M29	U6 M29	N6 M29
Köllnische Heide		BKHD		S45 S46 S47 M41 341 ⇒ 377	S46 M41 ⇒ N77	M41 ⇒ N77
Königs Wusterhausen	BKW	BKW		RE2 RB22 RB24 RB36 S46 721 722 723 724 727 728 729 730 733 735 736 737 739 790 S46		
Konstanzer Straße			Kn	U7 101	U7	N7
Köpenick		BKPK		S8 62 63 68 X69 164 169 269	S8 N64 N90	N64 N90
Kottbusser Tor			Kbo, Kbu	U1 U8 U8 140	U1 U8	N1 N8
Krumme Lanke		⇒ BMEX	K	U8 X11 118 622 ⇒ S1	U8 ⇒ S1	N8
Kummersdorf	BKUM			RB36 ⇒ 406		
Kurfürstendamm			Kfo, Kfu	U1 U9 M19 M29 M46 X10 109 110 204 249	U1 U9 M19 M29 M46 N10 N26	N1 N2 N8 N9 M19 M29 M46 N10 N26 N7X
Kurfürstenstraße			Kus ⇒ Bs	U1 U8 M48 M85 ⇒ U2 M19	U1 M48 ⇒ U2 M19	N1 N2 M48 ⇒ M19
Kurt-Schumacher-Platz			Sch	U6 M21 X21 122 125 128 221	U6 M21	N6 M21
Landsberger Allee		BLST		S41 S42 S8 S85 M5 M6 M8 156	S41 S42 S8 M5 M6 M8	M5 M6 M8
Lankwitz		BLAK		S25 S26 M82 X83 181 187 283 284 ⇒ 184 284	S25 M82 N81 ⇒ N84	M82 N81 ⇒ N84
Lehnitz		BLEN		S1	S1	
Leinestraße			L	U8	U8	N8
Leopoldplatz			Lpo, Lpu	U6 U9 120 142 147 221 247 327	U6 U9 N20	N6 N9 N20
Lichtenberg	BLO	BLI	Li	DB RB12 RB24 RB25 RB26 S5 S7 S75 U5 21 37 108 240 256 296	S5 S7 S75 U5 N50 N94	N50 N94 ⇒ N5
Lichtenrade		BLRD		S2 M76 172 175 275 743	S2 M76	M76
Lichterfelde Ost	BLIH	BLIO		RE3 RE4 RE5 S25 S26 M11 X11 184 284 ⇒ 380	S25 M11 N84	M11 N84
Lichterfelde Süd		BLIS		S25 S26 M85 186	S25 M85 N88	M85 N88
Lichterfelde West		BLWE		S1 M11 ⇒ M48 101 188	S1 M11 ⇒ M48 N88	M11 ⇒ M48 N88
Lindauer Allee			LD	U8 322 ⇒ M21	U8 ⇒ M21	N8 ⇒ M21
Lipschitzallee			La	U7 744 ⇒ M11 172	U7 ⇒ M11	⇒ M11
Lottschesee	BLOS			RB27		
Louis-Lewin-Straße			LL	U5 195	U5	N5
Löwenberg (Mark)	WLO			RE5 RB12 802 830 831 832 857		
Ludwigsfelde	BLF			RE3 RE4 619 621 701 702 705 708 709 710 714 715 720 750 751		
Ludwigsfelde-Struveshof	BSTH			RB22 621 702 708		
Magdalenenstraße			Md	U5 240	U5 N50 N56 N94	N5 N50 N56 N94
Mahlow		BMAH		S2 600 794 797	S2	
Mahlsdorf	BMHL	BMDF		RB26 S5 62 195 197 395 398 ⇒ 399	S5 N90 N95	N90 N95
Marienfelde		BMF		S2 M77 283 ⇒ 277	S2 M77 N81	M77 N81
Märkisches Museum			Mk ⇒ He	U2 147 165 265 ⇒ U8 200 248	U2 ⇒ U8 N42	⇒ N2 N8 N42
Marquardt	BMQU			RB20 RB21 ⇒ 609 614 650		
Marzahn		BMAZ		S7 M6 16 X54 191 192 195 291	S7 M6	M6
Mehringdamm			Me	U6 U7 M19 140	U6 U7 M19 N42	N6 N7 M19 N42
Mehrower Allee		BMEA		S7 X69 197	S7	
Melchow	WMCH			RB24 ⇒ 919		
Mendelssohn-Bartholdy-Park			MB	U2 M29	U2 M29	N1 M29
Messe Nord/ICC		BMN	⇒ Kd	S41 S42 S46 M49 X34 X49 139 218 ⇒ U2	S41 S42 M49 ⇒ U2	M49 ⇒ N2
Messe Süd		BMS		S8 S9 349	S9	
Mexikoplatz		BMEX	⇒ K	S1 118 622 ⇒ U8 X11	S1 ⇒ U8	N8
Michendorf	BMIP			RE7 RB23 RB33 X43 608 613 643 646	643	
Mierendorffplatz			Mp	U7 M27	U7 M27	N7 M27
Möckernbrücke			Mo, Mu	U1 U8 U7	U1 U7	N1
Mohrenstraße			MH	U2 M48 300	U2 M48	M48
Moritzplatz			Mr	U8 M29 ⇒ 140	U8 M29	N8 M29
Mühlenbeck-Mönchmühle		BMM		S8 806 810		
Müncheberg (Mark)	BMB			RB26 926 928 929 939 955		
Museumsinsel			MUI	U5 100 300	U5	N5
Nassenheide	WNAS			RB12 803		
Naturkundemuseum			NA	U6 M5 M8 M10 12	U6 M10 N40	N6 M10 N40
Nauen	BNAU			RE2 RB10 RB14 650 658 659 660 661 663 664 666 667 669 680		
Nauener Platz			Np	U9 247 327	U9	N9
Neu-Westend			Nd	U2 143 349	U2	N2
Neuenhagen		BNG		S5 940 949	S5	
Neukölln		BNK	Nk	S41 S42 S46 S46 S47 U7 171 377	S41 S42 S46 U7 N77	N7 N77
Niederlehme	BNDL			RB36 ⇒ 733		
Nikolassee		BNIS, BNIW		S1 S7 112 312 ⇒ 218	S1 S7 N16 N18	N16 N18
Nöldnerplatz		BNPL ⇒ BRH		S6 S7 S75 194 240 396 ⇒ S8 21	S5 S7 N94 ⇒ S8	N94
Nollendorfplatz			Nm, No, Nu	U1 U2 U8 U4 M19 106 187	U1 U2 U8 M19 N26	N1 N2 M19 N26
Nordbahnhof		BNB		S1 S2 S25 S26 M8 M10 12 247	S1 S2 S25 M10 N40	M10 N40
Olympiastadion		BOLS	⇒ Sd	S8 S9 ⇒ U2 M49 218	S9 ⇒ U2 M49	⇒ M49
Olympia-Stadion		⇒ BOLS	Sd	U2 ⇒ S8 S9	U2 ⇒ S9	
Onkel Toms Hütte			Ot	U8 118	U8	⇒ N8
Oranienburg	BOR	BORB		RE5 RB12 RB20 S1 800 801 802 803 804 805 821 824	S1	
Oranienburger Straße		BORS		S1 S2 S25 S26 M1 M5	S1 S2 S25 M1	M1
Oranienburger Tor			Ob	U6 M1 M5 12	U6 M1	N6 M1
Osdorfer Straße		BOSS		S25 S26 112 186	S25 N88	N88
Oskar-Helene-Heim			Os	U8 X10 110 115 285 623	U8 N10	N8 N10
Osloer Straße			Olo, Olu	U8 U9 M13 50 125 128 150 255	U8 U9 M13 N52	N8 N9 M13 N52
Ostbahnhof	BHF	BOSB		DB RB1 RB7 RB14 S8 S5 S7 S75 S9 140 142 147 240 300 347	S5 S7 S9 N40	N40
Ostkreuz	BOKN, BOKO, BOKR	BOK, BOKS		RE1 RE2 RE7 RB12 RB14 RB24 RB25 RB26 S8 S41 S42 S5 S7 S75 S8 S85 M43 194 347	S3 S41 S42 S5 S7 S8 M43 N94	M43 N94
Otisstraße			OTI	U6 ⇒ 125	U6	⇒ N6
Pankow		BPKW	PA	S2 S8 S85 U2 M1 50 M27 X54 155 250 255	S2 S8 U2 M1 M27 N50	N2 M1 M27 N50
Pankow-Heinersdorf		BPHD		S2 S8 50	S2 N50	N50
Pankstraße			Pk	U8 M27 ⇒ M13 50	U8 M27 ⇒ M13	N8 M27 ⇒ M13
Paracelsus-Bad		⇒ BARF	PB	U8 120 122 320 322 ⇒ S25	U8 N20 ⇒ S25	N8 N20

Bahnhof	Kürzel DB	Kürzel S	Kürzel U	Tagesverkehr	Nachtverkehr Fr/Sa + Sa/So	Nachtverkehr sonstige
Paradestraße			Ps	U6	U6	N6
Parchimer Allee			Pi	U7 M46 ⇒ 171 181	U7 M46	M46 ⇒ N7
Paulsternstraße			P	U7 139	U7 N39	N7 N39
Petershagen Nord		BPEN		S5 931 932 933 948 949	S5	
Pichelsberg		BPIC		S3 S9 ⇒ M49 218	S9 ⇒ M49	⇒ M49
Plänterwald		BPWA		S3 S5 S9 165 166 377 ⇒ 265	S3 S9 N60 N65 N77	N60 N65 N77
Platz der Luftbrücke			PL	U6 M43 248	U6 M43 N42	N6 M43 N42
Podbielskiallee			Po	U3 ⇒ 110	U3 ⇒ N10	⇒ N10
Poelchaustraße		BPOE		S7 291 ⇒ 191	S7	
Potsdam Charlottenhof	BPDC			RE1 RB20 RB21 RB22 RB23 91 94 98 X5 580 605 606 610 631	N14	N14
Potsdam Golm	BGOL			RB20 RB21 RB22 X5 605 606 612	N14	N14
Potsdam Hauptbahnhof	BPD	BPDH		RE1 RB20 RB21 RB22 RB23 S7 91 92 93 96 98 99 X1 X5 X15 580 601 603 604 605 606 607 608 611 614 619 631 638 643 650 690 691 694 695 715 750	S7 607 611 631 N13 N14 N15 N16 N17 N43	N13 N14 N16 N17
Potsdam Medienstadt Babelsberg	BDW			RE7 RB33 601 619 690 696	N13	N13
Potsdam Park Sanssouci	BWP			RE1 RB20 RB21 RB22 X5 605 606 610 695	N14	N14
Potsdam Pirschheide	BPDP			RB23 91 94 695 ⇒ 580 631	631	
Potsdam Rehbrücke	BRC			RE7 RB33 91 93 98 602 611 693 699 750	N14	N14
Potsdamer Platz	BPOF	BPOP	Pd	RE3 RE4 RE5 RB10 S1 S2 S25 S26 U2 M41 M48 M85 200 300	S1 S2 S25 U2 M41 M48	N2 M41 M48
Prenzlauer Allee		BPLA		S41 S42 S8 S85 M2 156	S41 S42 S8 M2	M2
Priesterweg		BPRS		S2 S25 S26 M76 X76 170 246 ⇒ 187	S2 S25 M76	M76
Prinzenstraße			Pr	U1 U3 140 ⇒ M41	U1 ⇒ M41	N1 ⇒ M41
Priort	BPOT			RB20 RB21 662		
Rahnsdorf		BRD		S8 87 161	S8 N61 ⇒ N65	N61 ⇒ N65
Rangsdorf	BRSF			RE5 RE7 713		
Raoul-Wallenberg-Straße		BRW		S7 X54 154	S7	
Rathaus Neukölln			Rk	U7 M43 166 ⇒ M41	U7 M43 N94 ⇒ M41	N7 M43 N94 ⇒ M41
Rathaus Reinickendorf			RR	U8 X33 220 221 322 ⇒ 124	U8 ⇒ N24	N8 ⇒ N24
Rathaus Schöneberg			RS	U4 ⇒ M43 M46 143	⇒ M43 M46	⇒ M43 M46
Rathaus Spandau	⇒ BSPD	⇒ BSPA	RSp	U7 M32 M36 M37 M45 X33 X37 130 134 135 136 137 237 337 638 671 ⇒ RE2 RE4 RE6 RE10 RB13 RB14 S3 S9	U7 M32 M36 M37 M45 N30 N34 ⇒ S9	N7 M32 M36 M37 M45 N30 N34
Rathaus Steglitz		BRST	Rzu	S1 U9 M48 M82 M85 X83 170 186 188 282 283 284 285	S1 U9 M48 M82 M85 N88	N9 M48 M82 M85 N88
Rehberge			Rb	U6 ⇒ 120 221	U6 ⇒ N20	N6 ⇒ N20
Rehfelde	BRE			RB26 934		
Reinickendorfer Straße			Ri	U6 M27 120 147	U6 M27 N20	N6 M27 N20
Residenzstraße			RE	U8 122 125 327	U8	N8
Richard-Wagner-Platz			Rw	U7 M45	U7 M45	N7 M45
Rohrdamm			Rm	U7 123 139	U7 N23 N39	N7 N23 N39
Röntgental		BRGT		S2	S2	
Rosa-Luxemburg-Platz			Lu	U2 M8 142	U2	N2
Rosenthaler Platz			Ro	U8 M1 M8 142	U8 M1 N40	N8 M1 N40
Rotes Rathaus			RHO	U5 200 300 ⇒ M4 M5 M6 100 248	U5 N40 N42 N60 N65 ⇒ M4 M5	N2 N8 N40 N42 N60 N65 ⇒ N5 M4 M5
Rüdesheimer Platz			Rd	U3 186 ⇒ 101 248	U3	⇒ N3
Rüdnitz	WRZ			RB24 ⇒ 896 909		
Rudow			R	U7 X7 X71 162 171 172 260 271 371 372 744	U7 N7	N7
Ruhleben			Rl	U2 M45 X37 130 131	U2 M45	N2 M45
Ruhlsdorf-Zerpenschleuse	BRUZ			RB27 902 905		
Rummelsburg		BRH ⇒ BNPL		S8 21 194 240 ⇒ S5 S7 S75 396	S8 N94 ⇒ S5 S7	N94
Saarmund	BSAM			RB22 ⇒ 624		
Sachsenhausen	BSAH			RB12 804 821		
Samariterstraße			Sa	U5	U5	N5
Savignyplatz		BSAP		S3 S5 S7 S9 ⇒ M49 X34	S7 S9 ⇒ M49	⇒ M49
Scharnweberstraße			Scha	U6 221 ⇒ 125	U6	N6
Schichauweg		BSC		S2 X83 275	S2	
Schillingstraße			Si	U5	U5	N5
Schlachtensee		BSLS		S1	S1	
Schlesisches Tor			S	U1 U3 165 265	U1 N60 N65	N1 N60 N65
Schloßstraße			Slo, Slu	U9 M48 M85 186 282	U9 M48	N9 M48
Schmachtenhagen	BSHN			RB27 805		
Schöneberg		BSGR, BSGV		S1 S41 S42 S46 M46 248	S1 S41 S42 M46	M46 N7X
Schönerlinde	BSL			RB27 ⇒ 891		
Schöneweide	BSWP	BSW		RB24 S45 S46 S47 S8 S85 S9 M17 21 37 60 61 67 M11 X11 160 163 165 166 265	S46 S47 S8 S9 M17 M11 N60 N65	M17 M11 N60 N65
Schönfließ		BSNF		S8 ⇒ 809 810		
Schönhauser Allee		BSAL	Sh	S41 S42 S8 S85 U2 M1	S41 S42 S8 U2 M1	N2 M1
Schönholz		BSNH		S1 S25 S26 150 327 ⇒ 155	S1 S2 N52	N52
Schönleinstraße			ST	U8 ⇒ M41	U8 ⇒ M41	N8 ⇒ M41
Schönwalde (BAR)	BSWH			RB27 891		
Schulzendorf		BSZF		S25 124	S25 N24	N24
Schwartzkopffstraße			SK	U6	U6	N6
Seddin	BSE			RE7 RB23 643 646		
Seegefeld	BSFD			RB10 RB14 648		
Seestraße			Se	U6 M13 50 106 120	U6 M13 N20 N26	N6 M13 N20 N26
Senefelderplatz			Sz	U2 ⇒ M1 M2 12	U2 ⇒ M1 M2	N2 ⇒ M1 M2
Siemensdamm			Sie	U7 123 139	U7	N7
Siemensstadt [außer Betrieb]		BSMS	⇒ Rm	⇒ U7 123 139	⇒ U7 N23 N39	⇒ N7 N23 N39
Sonnenallee		BSO		S41 S42 M41 171	S41 S42 M41 N77	N7 M41 N77
Sophie-Charlotte-Platz			So	U2 309	U2	N2
Spandau	BSPD	BSPA	⇒ RSp	RE2 RE4 RE6 RE10 RB13 RB14 S3 S9 ⇒ U7 M32 M36 M37 M45 X33 130 134 135 136 137 237 337 638 671	S9 ⇒ U7 M32 M36 M37 M45 N30 N34	⇒ N7 M32 M36 M37 M45 N30 N34
Spichernstraße			Sno, Snu	U3 U9 204	U3 U9	N3 N9 N7X
Spindlersfeld		BSPF		S47 61 63 165	S47 N64 N65	N64 N65
Spittelmarkt			Sp	U2 200 248 265	U2 N42	N2 N42
Springpfuhl		BSPH		S7 S75 M8 18 194	S7 S75 M8	M8
Staaken	BSTA			RE4 RB13 M32 ⇒ 237	M32	M32
Stadtmitte			Mi, Mic	U2 U6 200 265	U2 U6	N2 N6

Bahnhof	Kürzel DB	Kürzel S	Kürzel U	Tagesverkehr	Nachtverkehr Fr/Sa + Sa/So	Nachtverkehr sonstige
Storkow (Mark)	BSTW			RB36 405 406 407 435		
Storkower Straße		BSTO		S41 S42 S8 S85 156 240 ⇒ M13 16 21	S41 S42 S8 ⇒ M13 N50	⇒ M13 N50
Strausberg	BST	BSTV		RB26 S5 89 885 923 926 927 929 931 932 933 934 936 937 950 955 966	S5	
Strausberg Nord		BSTN		S5 885 927 929 931 937 946 947 966	S5	
Strausberg Stadt		BSTR		S5 923 926 927 929 931 937 947 966	S5	
Strausberger Platz			Sr	U5 142	U5	N5
Stresow		BSRW		S8 S9 130 ⇒ M45	S9 ⇒ M45	⇒ M45
Südende		BSDE ⇒ BATS		S25 S26 282 ⇒ S2 184	S25 ⇒ S2 N84	⇒ N84
Südkreuz	BPAF	BSKR, BSKV		RB3 RB24 RB5 RB10 S2 S25 S26 S41 S42 S45 S46 M46 106 184 204 248	S2 S25 S41 S42 M46	M46
Südstern			Sü	U7 ⇒ M41	U7 ⇒ M41	N7 ⇒ M41
Sundgauer Straße		BSDG		S1 X11 ⇒ M48 101	S1 ⇒ M48	⇒ M48
Tegel		BTG	⇒ Tg	S25 133 ⇒ U6 124 125 220 222	S25 N25 ⇒ U6 N22 N24 N33	N25 ⇒ N22 N24 N33
Teltow	BTL			RE4 X1 600 601 704		
Teltow Stadt		BTLS		S25 S26 X1 X10 600 601 615 620 621 625 626 704	S25 N13	N13
Tempelhof		BTHF	Ts	S41 S42 S45 S46 U6 140 184	S41 S42 S46 U6 N84	N6 N84
Theodor-Heuss-Platz			Th	U2 M49 X34 X49 143 218 349	U2 M49 N43	N2 M49 N43
Tiergarten		BTGN		S3 S5 S7 S9	S7 S9	N9
Tierpark			Tk	U5 M17 27 37 296	U5 M17 50	M17 50
Treptower Park		BTP		S41 S42 S8 S85 S9 M43 165 166 194 265	S41 S42 S8 S9 M43 N60 N65 N94	N60 N65 N94
Turmstraße			Tm	U9 M27 101 123 187 245	U9 M27 N40	N9 M27 N40
Uhlandstraße			U	U1 M19 M29 X10 109 110	U1 M19 M29 N10	M19 M29 N10
Ullsteinstraße			Ull	U6 170	U6	N6
Unter den Linden			ULO, ULU	U5 U6 100 147 300	U5 U6	N5 N6
Velten	BVLT			REG RB55 807 816 824		
Viktoria-Luise-Platz			V	U4 ⇒ M46 204	⇒ M46	⇒ M46
Vinetastraße			VIN	U2 M1 50 250	U2 M1	N2 M1
Voltastraße			Vo	U8 247	U8	N8
Waidmannslust		BWAI		S1 S26 222 ⇒ 122 220 322	S1 N22 ⇒ N20	N22 ⇒ N20
Walther-Schreiber-Platz			Wsg	U9 M48 M76 M85 X76 181 186	U9 M48 M76 N81	N9 M48 M76 N81
Wandlitz	BWAZ			RB27 891 894 897 902 909		
Wandlitzsee	BWAS			RB27 894 897 902 909		
Wannsee	BWS	BWSS		RB1 RB7 RE21 RE22 RB33 S1 S7 114 118 218 316 318 620 F10	S1 S7 N16	N16
Warschauer Straße		BWRS	WA	S3 S5 S7 S75 S9 U1 U3 M10 M13 300 347	S5 S7 S9 U1 M10 M13	N1 M10 M13
Wartenberg		BWAB		S75 256 ⇒ M4 M5	S75 N56 ⇒ M5	N56 ⇒ M5
Waßmannsdorf		BWAF		S45 S9 600 720 743	S9	
Weberwiese			WR	U5 347	U5	N5
Wedding		BWED	We	S41 S42 S46 U6 M27 120 147	S41 S42 U6 M27 N20	N6 M27 N20
Weinmeisterstraße			W	U8 M1	U8 M1 N40 N42	N8 M1 N40 N42
Wensickendorf	BWSD			RB27 805		
Werder (Havel)	BWE			RE1 607 630 631 632 633 634		
Wernerwerk [außer Betrieb]		BWRK	⇒ Sie	⇒ U7 123 139	⇒ U7	⇒ N7
Westend		BWES		S41 S42 S46 M45 ⇒ 139 309	S41 S42 M45	M45
Westhafen		BWH	WF	S41 S42 S46 U9	S41 S42 U9	N9
Westkreuz		BWKRR, BWKS		S3 S41 S42 S46 S5 S7 S9 143	S41 S42 S7 S9 N43	N43
Westphalweg			Wl	U6 282	U6	N6
Wildau		BWI		S46 736 737 738	S46	
Wilhelmshagen		BWIG		S3 161	S3 N61	N61
Wilhelmshorst	BWHO			RE7 RB33 ⇒ 608 613		
Wilhelmsruh		BWM		S1 S26 122 ⇒ 155	S1	
Wilmersdorfer Straße	⇒ BCHB	⇒ BCHS	Wd	U7 X34 X49 309 310 ⇒ RE1 RE7 RB14 RE21 RE22 S3 S5 S7 S9 109	U7 M49 ⇒ S7 S9	M49
Wittenau		BWIN	WIU	S1 S26 U8 M21 X21 X33 120 122 124 220 221	S1 U8 M21 N20 N24	N8 M21 N20 N24
Wittenbergplatz			Wt	U1 U2 U3 M19 M29 M46	U1 U2 U3 M19 M29 M46	N1 N2 N3 M19 M29 M46
Wollankstraße		BWOK		S1 S25 S26 M27 250 255	S1 S25 M27	M27
Wuhletal		BWT	Wh	S5 U5 191 291	S5 U5 N64 N90 N91 N95	N5 N64 N90 N91 N95
Wuhlheide		BWHH		S3 190	S3	
Wünsdorf-Waldstadt	BWUE			RE3 RE7 700 706 712 770		
Wustermark	BWUS			RE4 RB13 RB21 649 650 663		
Wutzkyallee			Wk	U7 ⇒ M11	U7 ⇒ M11	⇒ N7 M11
Yorckstraße		BYOR ⇒ BGGS	Y	S2 S25 S26 U7 M19 ⇒ S1	S2 S25 U7 M19 ⇒ S1	N7 M19
Zeesen	BZS			RB24 724 727		
Zehlendorf		BZD		S1 X10 101 112 115 285 623 ⇒ M48 X11 118	S1 N10 N12 N84 ⇒ M48 N18	N10 N12 N84 ⇒ M48 N18
Zepernick		BZEP		S2 867 868 891 893 899 900 901	S2	
Zernsdorf	BZF			RB36 ⇒ 721 723		
Zeuthen		BZTH		S46 S8 731 733 734	S46	
Zitadelle			Zi	U7 X33	U7	N7
Zoologischer Garten	BZOO	BZOS	Zo, Zu	RE1 RE2 RE7 RB14 RB21 RB22 S3 S5 S7 S9 U2 U9 M45 M46 M49 X10 X34 100 109 110 200 204 245 249	S7 S9 U2 U9 M45 M46 M49 N10 N26	N1 N2 N9 M45 M46 M49 N10 N26 N7X
Zossen	BZO			RE3 RE7 700 701 706 707 714 716 729 770 771 789 790 791 795 796		
Zühlsdorf	BZUH			RB27 806 ⇒ 891		
Zwickauer Damm			Zd	U7 271 ⇒ M11 171	U7 ⇒ M11	⇒ N7 M11

Linie	Fahrtweg	Takt
M1	BPKW $\overset{3}{\leftrightarrow}$ VIN $\overset{4}{\leftrightarrow}$ BSAL $\overset{4}{\leftrightarrow}$ EB $\overset{5}{\leftrightarrow}$ Ro $\overset{2}{\leftrightarrow}$ BHKM $\overset{3}{\leftrightarrow}$ BORS $\overset{3}{\leftrightarrow}$ Ob $\overset{2}{\leftrightarrow}$ BFST	t: 7,5-10, f/a: 20, n: 30
M2	BPLA $\overset{12}{\leftrightarrow}$ BALX	t: 5-7, f/a: 10, n: 30
M4	BHH $\overset{18}{\leftrightarrow}$ BGSS $\overset{12}{\leftrightarrow}$ BALX $\overset{3}{\leftrightarrow}$ BHKM	t: 3-10, f/a: 20, n: 30
M5	BLST $\overset{13}{\leftrightarrow}$ BALX $\overset{3}{\leftrightarrow}$ BHKM $\overset{3}{\leftrightarrow}$ BORS $\overset{2}{\leftrightarrow}$ Ob $\overset{3}{\leftrightarrow}$ NA $\overset{5}{\leftrightarrow}$ BHBF	t: 5-10, f/a: 10-20, n: 30
M6	Hd $\overset{18}{\leftrightarrow}$ BMAZ $\overset{18}{\leftrightarrow}$ BLST $\overset{13}{\leftrightarrow}$ BALX $\overset{3}{\leftrightarrow}$ BHKM	t: 10, f/a: 15-20, n: 30
M8	BSPH $\overset{15}{\leftrightarrow}$ BLST $\overset{11}{\leftrightarrow}$ Lu $\overset{2}{\leftrightarrow}$ Ro $\overset{5}{\leftrightarrow}$ BNB $\overset{3}{\leftrightarrow}$ NA $\overset{4}{\leftrightarrow}$ BHBF	t: 5-10, f/a: 20, n: 30
M10	BHBF $\overset{5}{\leftrightarrow}$ NA $\overset{2}{\leftrightarrow}$ BNB $\overset{3}{\leftrightarrow}$ B $\overset{5}{\leftrightarrow}$ EB $\overset{16}{\leftrightarrow}$ Ft $\overset{5}{\leftrightarrow}$ BWRS	t: 5, f/a: 10-15, n: 30
M13	Se $\overset{5}{\leftrightarrow}$ Olo $\overset{5}{\leftrightarrow}$ BBOS $\overset{33}{\leftrightarrow}$ BFA $\overset{10}{\leftrightarrow}$ BWRS	t: 10, f/a: 20, n: 30
M17	BHH $\overset{18}{\leftrightarrow}$ BFFO $\overset{6}{\leftrightarrow}$ Tk $\overset{5}{\leftrightarrow}$ BKLH $\overset{11}{\leftrightarrow}$ BSW $\overset{20}{\leftrightarrow}$ BADL	t: 10, f/a: 20, n: 30
12	EB $\overset{8}{\leftrightarrow}$ BNB $\overset{3}{\leftrightarrow}$ NA $\overset{3}{\leftrightarrow}$ Ob $\overset{2}{\leftrightarrow}$ BFST	t: 10, f/a: 20
16	BMAZ $\overset{23}{\leftrightarrow}$ BFA	t: 10, f/a: 20, So: –
18	Hd $\overset{20}{\leftrightarrow}$ BSPH	H: 10, N: 20, So: –
21	BLI $\overset{22}{\leftrightarrow}$ Ft $\overset{9}{\leftrightarrow}$ BRH $\overset{19}{\leftrightarrow}$ BSW	t/f/a: 20
27	BFFO $\overset{6}{\leftrightarrow}$ Tk $\overset{5}{\leftrightarrow}$ BKLH	t/f/a: 20
37	BLI $\overset{11}{\leftrightarrow}$ BFFO $\overset{6}{\leftrightarrow}$ Tk $\overset{5}{\leftrightarrow}$ BKLH $\overset{11}{\leftrightarrow}$ BSW	t: 20, Sa/So: –

Linie	Fahrtweg	Takt
50	BPDH $\overset{7}{\leftrightarrow}$ BPKW $\overset{3}{\leftrightarrow}$ VIN $\overset{7}{\leftrightarrow}$ BBOS $\overset{5}{\leftrightarrow}$ Olo $\overset{5}{\leftrightarrow}$ Se	t: 10, f/a: 20
60	BSW $\overset{28}{\leftrightarrow}$ BFRH	t: 20
61	(BSW $\overset{17}{\leftrightarrow}$) BADL $\overset{6}{\leftrightarrow}$ BSPF $\overset{24}{\leftrightarrow}$ BFRH	t: 20
62	BKPK $\overset{20}{\leftrightarrow}$ BMDF	t: 20
63	BADL $\overset{6}{\leftrightarrow}$ BSPF $\overset{13}{\leftrightarrow}$ BKPK	t: 20
68	BKPK $\overset{19}{\leftrightarrow}$ BGAS	t: 20
M11	Dd $\overset{7}{\leftrightarrow}$ BLWE $\overset{10}{\leftrightarrow}$ BLIO $\overset{15}{\leftrightarrow}$ BBCH $\overset{15}{\leftrightarrow}$ Jt $\overset{22}{\leftrightarrow}$ BSW	t: 10, f/a: 20, n: 30
M19	BGWD $\overset{9}{\leftrightarrow}$ BHAL $\overset{4}{\leftrightarrow}$ Ad $\overset{6}{\leftrightarrow}$ U $\overset{2}{\leftrightarrow}$ Kfo $\overset{4}{\leftrightarrow}$ Wt $\overset{2}{\leftrightarrow}$ Nm $\overset{2}{\leftrightarrow}$ BS $\overset{4}{\leftrightarrow}$ BGGS $\overset{1}{\leftrightarrow}$ BYOR $\overset{3}{\leftrightarrow}$ Me	t: 10, f/a: 20, n: 30
M21	BWIN $\overset{8}{\leftrightarrow}$ BKBO $\overset{5}{\leftrightarrow}$ Sch $\overset{9}{\leftrightarrow}$ JK $\overset{4}{\leftrightarrow}$ BJUN	t: 10, f/a: 20, n: 30
M27	BPKW $\overset{6}{\leftrightarrow}$ BWOK $\overset{6}{\leftrightarrow}$ Pk $\overset{5}{\leftrightarrow}$ BWED $\overset{1}{\leftrightarrow}$ Ri $\overset{12}{\leftrightarrow}$ Tm $\overset{11}{\leftrightarrow}$ Mp $\overset{4}{\leftrightarrow}$ BJUN	t: 6-7, f/a: 10-20, n: 30
M29	BHAL $\overset{4}{\leftrightarrow}$ Ad $\overset{6}{\leftrightarrow}$ U $\overset{2}{\leftrightarrow}$ Kfo $\overset{4}{\leftrightarrow}$ Wt $\overset{8}{\leftrightarrow}$ MB $\overset{3}{\leftrightarrow}$ BAHU $\overset{4}{\leftrightarrow}$ Ks $\overset{5}{\leftrightarrow}$ Mr $\overset{7}{\leftrightarrow}$ Gr $\overset{10}{\leftrightarrow}$ Hpo	t: 5-10, f/a: 10-20, n: 30
M32	BSPA $\overset{15}{\leftrightarrow}$ BSTA	t: 5-7, f/a: 10-20, n: 30
M36	BSPA $\overset{21}{\leftrightarrow}$ Hs	t: 5, f/a: 10, n: 30
M41	BKHD $\overset{4}{\leftrightarrow}$ BSO $\overset{10}{\leftrightarrow}$ Hpo $\overset{11}{\leftrightarrow}$ Ho $\overset{4}{\leftrightarrow}$ BAHU $\overset{2}{\leftrightarrow}$ BPOP $\overset{7}{\leftrightarrow}$ BHBF	t: 4-10, f/a: 20, n: 30

Linie	Fahrtweg	Takt
M43	Beu/Beu $\overset{11}{\leftrightarrow}$ BJLB $\overset{6}{\leftrightarrow}$ PL $\overset{9}{\leftrightarrow}$ Bo $\overset{5}{\leftrightarrow}$ Rk $\overset{10}{\leftrightarrow}$ BTP $\overset{4}{\leftrightarrow}$ BOK/BOKS	t: 5/10, f/a: 20, n: 30
M45	BSPA $\overset{11}{\leftrightarrow}$ Rl $\overset{10}{\leftrightarrow}$ BWES $\overset{7}{\leftrightarrow}$ Rw $\overset{5}{\leftrightarrow}$ RP $\overset{4}{\leftrightarrow}$ BZOS	t: 6-10, f/a: 20, n: 30
M46	BZOS $\overset{3}{\leftrightarrow}$ Kfo $\overset{4}{\leftrightarrow}$ Wt $\overset{11}{\leftrightarrow}$ BSGR $\overset{4}{\leftrightarrow}$ BSKR $\overset{9}{\leftrightarrow}$ At $\overset{16}{\leftrightarrow}$ Pi $\overset{8}{\leftrightarrow}$ Br	t: 5-10, f/a: 20, n: 30
M48	BRST $\overset{4}{\leftrightarrow}$ Slo $\overset{2}{\leftrightarrow}$ Wsg $\overset{5}{\leftrightarrow}$ BIP $\overset{7}{\leftrightarrow}$ Kt $\overset{3}{\leftrightarrow}$ BS $\overset{1}{\leftrightarrow}$ Kus $\overset{8}{\leftrightarrow}$ BPOP $\overset{2}{\leftrightarrow}$ MH	t: 10, f/a: 20, n: 30
M49	BHST $\overset{3}{\leftrightarrow}$ Th $\overset{4}{\leftrightarrow}$ BMN $\overset{6}{\leftrightarrow}$ Wd $\overset{7}{\leftrightarrow}$ BZOS	t: 10, f/a: 20, n: 30
M76	Wsg $\overset{2}{\leftrightarrow}$ BFB $\overset{6}{\leftrightarrow}$ BPRI $\overset{11}{\leftrightarrow}$ Mf $\overset{22}{\leftrightarrow}$ BLRD	t: 5-10, f/a: 20, n: 30
M77	Mf $\overset{8}{\leftrightarrow}$ BMF	t: 10, f/a: 20, n: 30
M82	BRST $\overset{10}{\leftrightarrow}$ BLAK	t: 6-10, f/a: 20, n: 30
M85	BLIS $\overset{24}{\leftrightarrow}$ BRST $\overset{4}{\leftrightarrow}$ Slo $\overset{2}{\leftrightarrow}$ Wsg $\overset{5}{\leftrightarrow}$ BIP $\overset{7}{\leftrightarrow}$ Kt $\overset{3}{\leftrightarrow}$ BS $\overset{1}{\leftrightarrow}$ Kus $\overset{8}{\leftrightarrow}$ BPOP $\overset{6}{\leftrightarrow}$ BHBF	t: 10, f/a: 20, n: 30
X7	R $\overset{7}{\leftrightarrow}$ BFLH $\overset{11}{\leftrightarrow}$ BFBB	t: 10, f/a: 20
X10	BZOS $\overset{3}{\leftrightarrow}$ Kfo $\overset{1}{\leftrightarrow}$ U $\overset{5}{\leftrightarrow}$ Ad $\overset{3}{\leftrightarrow}$ BHAL $\overset{12}{\leftrightarrow}$ Os $\overset{7}{\leftrightarrow}$ BZD ($\overset{12}{\leftrightarrow}$ BTLS, nur zur HVZ)	t: 10-20, f/a: 20
X11	K $\overset{10}{\leftrightarrow}$ BSDG $\overset{14}{\leftrightarrow}$ BLIO $\overset{12}{\leftrightarrow}$ BBCH $\overset{12}{\leftrightarrow}$ Jt $\overset{15}{\leftrightarrow}$ BSW	t: 10-20, f/a: 20
X21	BWIN $\overset{6}{\leftrightarrow}$ BKBO $\overset{4}{\leftrightarrow}$ Sch $\overset{8}{\leftrightarrow}$ JK $\overset{4}{\leftrightarrow}$ BJUN	t: 10, f/a: 20
X33	BSPA $\overset{2}{\leftrightarrow}$ AS $\overset{3}{\leftrightarrow}$ Zi $\overset{2}{\leftrightarrow}$ Hs $\overset{17}{\leftrightarrow}$ Hh $\overset{8}{\leftrightarrow}$ RR $\overset{3}{\leftrightarrow}$ BWIN	t: 6-10, f/a: 20
X34	BHST $\overset{2}{\leftrightarrow}$ Th $\overset{3}{\leftrightarrow}$ BMN $\overset{5}{\leftrightarrow}$ Wd $\overset{7}{\leftrightarrow}$ BZOS	t: 10, f/a: 20, So: 20
X37	BFKS $\overset{26}{\leftrightarrow}$ BSPA $\overset{9}{\leftrightarrow}$ Rl	t: 20/20/30, f/a: 30/30/60

Linie	Fahrtweg	Takt
X49	BHST $\overset{2}{\leftrightarrow}$ Th $\overset{3}{\leftrightarrow}$ BMN $\overset{4}{\leftrightarrow}$ BCHS	H: 10-20, Sa/So: –
X54	BPKW $\overset{25}{\leftrightarrow}$ BHH $\overset{9}{\leftrightarrow}$ BRWA $\overset{4}{\leftrightarrow}$ BMAZ ($\overset{14}{\leftrightarrow}$ Hd, nur Mo-Sa)	t: 10-20, f/a: 20
X69	BMEA $\overset{18}{\leftrightarrow}$ E $\overset{13}{\leftrightarrow}$ BKPK	t: 20
X71	Mf $\overset{16}{\leftrightarrow}$ Jt $\overset{8}{\leftrightarrow}$ R $\overset{6}{\leftrightarrow}$ BFLH $\overset{12}{\leftrightarrow}$ BFBB	t: 20
X76	Wsg $\overset{2}{\leftrightarrow}$ BFB $\overset{4}{\leftrightarrow}$ BPRI $\overset{11}{\leftrightarrow}$ Mf	t: 20, So: –
X83	Dd $\overset{8}{\leftrightarrow}$ BRST $\overset{8}{\leftrightarrow}$ BLAK $\overset{19}{\leftrightarrow}$ BSC	t: 5-10, f/a: 20
100	BZOS $\overset{17}{\leftrightarrow}$ BTOR $\overset{2}{\leftrightarrow}$ ULO $\overset{2}{\leftrightarrow}$ MUI $\overset{5}{\leftrightarrow}$ BALX	t: 5-10, f/a: 20
101	Tm $\overset{23}{\leftrightarrow}$ Kn $\overset{2}{\leftrightarrow}$ Fpo $\overset{2}{\leftrightarrow}$ Bli $\overset{8}{\leftrightarrow}$ Bt $\overset{16}{\leftrightarrow}$ BZD	t: 10-20, f/a: 20
106	Se $\overset{11}{\leftrightarrow}$ BBEU $\overset{10}{\leftrightarrow}$ Ha $\overset{9}{\leftrightarrow}$ Nm $\overset{2}{\leftrightarrow}$ BS $\overset{3}{\leftrightarrow}$ Kt $\overset{3}{\leftrightarrow}$ BJLB $\overset{5}{\leftrightarrow}$ BSKR	t: 20, f/a: 20
108	BLI $\overset{14}{\leftrightarrow}$ E	t: 10-20, f/a: 20
109	JK $\overset{2}{\leftrightarrow}$ BJUN $\overset{11}{\leftrightarrow}$ BCHS $\overset{2}{\leftrightarrow}$ Ad $\overset{5}{\leftrightarrow}$ U $\overset{2}{\leftrightarrow}$ Kfo $\overset{2}{\leftrightarrow}$ BZOS	t: 10, f/a: 20
110	BZOS $\overset{3}{\leftrightarrow}$ Kfo $\overset{1}{\leftrightarrow}$ U $\overset{5}{\leftrightarrow}$ Ad $\overset{19}{\leftrightarrow}$ T $\overset{2}{\leftrightarrow}$ Os	t: 20, f/a: 20
112	BNIS $\overset{15}{\leftrightarrow}$ BZD $\overset{19}{\leftrightarrow}$ BOSS	t: 10-20, f/a: 20
115	BZD $\overset{7}{\leftrightarrow}$ Os $\overset{14}{\leftrightarrow}$ BHO $\overset{3}{\leftrightarrow}$ Fpo	t: 10-20, f/a: 20-30
118	Ot $\overset{5}{\leftrightarrow}$ K $\overset{2}{\leftrightarrow}$ BMEX $\overset{16}{\leftrightarrow}$ BWSS	t: 10-20, f/a: 20

Linie	Fahrtweg	Takt
120	BWIN $\overset{9}{\leftrightarrow}$ PB $\overset{13}{\leftrightarrow}$ Se $\overset{4}{\leftrightarrow}$ Lpo $\overset{3}{\leftrightarrow}$ BWED $\overset{3}{\leftrightarrow}$ Ri $\overset{7}{\leftrightarrow}$ BHBF	t: 10-20, f/a: 20
122	Sch $\overset{5}{\leftrightarrow}$ PB $\overset{7}{\leftrightarrow}$ RE $\overset{6}{\leftrightarrow}$ BWM $\overset{28}{\leftrightarrow}$ BWIN	t: 5-20, f/a: 20
123	BHBF $\overset{15}{\leftrightarrow}$ Tm $\overset{6}{\leftrightarrow}$ BBEU $\overset{16}{\leftrightarrow}$ JK $\overset{5}{\leftrightarrow}$ Hl $\overset{5}{\leftrightarrow}$ Sie $\overset{3}{\leftrightarrow}$ Rm	t: 10-20, f/a: 20
124	BWIN $\overset{10}{\leftrightarrow}$ BTG $\overset{4}{\leftrightarrow}$ Tg $\overset{9}{\leftrightarrow}$ BSZF $\overset{4}{\leftrightarrow}$ BHLS	t: 10-20, f/a: 20
125	Olo $\overset{10}{\leftrightarrow}$ RE $\overset{9}{\leftrightarrow}$ Sch $\overset{22}{\leftrightarrow}$ BTG $\overset{4}{\leftrightarrow}$ Tg $\overset{22}{\leftrightarrow}$ BFOH	t: 10-20, f/a: 20
128	Sch $\overset{12}{\leftrightarrow}$ FN $\overset{3}{\leftrightarrow}$ Olo	t: 10, f/a: 20-30
130	BSPA $\overset{5}{\leftrightarrow}$ BSRW ($\overset{8}{\leftrightarrow}$ Rl, nur Mo-Fr zur HVZ)	t: 10-20, f/a: 20
133	Tg $\overset{3}{\leftrightarrow}$ BTG $\overset{4}{\leftrightarrow}$ Bk $\overset{4}{\leftrightarrow}$ Hh $\overset{17}{\leftrightarrow}$ Hh	t: 10-20, f/a: 20
136	RSp $\overset{32}{\leftrightarrow}$ BHD	H: 20, N: 30-60
139	P $\overset{2}{\leftrightarrow}$ Rm $\overset{2}{\leftrightarrow}$ Sie $\overset{11}{\leftrightarrow}$ Kd $\overset{3}{\leftrightarrow}$ BMN	t: 20
140	BTHF $\overset{2}{\leftrightarrow}$ At $\overset{14}{\leftrightarrow}$ Me $\overset{1}{\leftrightarrow}$ Gs $\overset{6}{\leftrightarrow}$ Pr $\overset{7}{\leftrightarrow}$ Kbo $\overset{12}{\leftrightarrow}$ BOSB	t: 10-20, f/a: 20
142	BOSB $\overset{5}{\leftrightarrow}$ Sr $\overset{10}{\leftrightarrow}$ Lu $\overset{2}{\leftrightarrow}$ Ro $\overset{4}{\leftrightarrow}$ Ob $\overset{8}{\leftrightarrow}$ BHBF ($\overset{17}{\leftrightarrow}$ Am $\overset{3}{\leftrightarrow}$ Lpo, nur Mo-Sa tagsüber)	t: 20, a/f: 20
143	Nd $\overset{4}{\leftrightarrow}$ Th $\overset{7}{\leftrightarrow}$ BHAL $\overset{8}{\leftrightarrow}$ Fpo $\overset{2}{\leftrightarrow}$ Bli $\overset{3}{\leftrightarrow}$ Beo $\overset{8}{\leftrightarrow}$ BIP $\overset{3}{\leftrightarrow}$ BFRU	t: 20
147N	Lpo $\overset{3}{\leftrightarrow}$ BWED $\overset{1}{\leftrightarrow}$ Ri $\overset{11}{\leftrightarrow}$ BHBF $\overset{8}{\leftrightarrow}$ BFST $\overset{1}{\leftrightarrow}$ ULO → weiter als 265N nach Mi	t: 10-20, a/f: 20
147S	BOSB $\overset{10}{\leftrightarrow}$ Mk	t: 20, f/a: 20
150	Olo $\overset{6}{\leftrightarrow}$ BSNH $\overset{15}{\leftrightarrow}$ BBLB $\overset{26}{\leftrightarrow}$ BBU	H: 10, N: 20

Linie	Fahrtweg	Takt
154	BBLB $\overset{25}{\leftrightarrow}$ BHH $\overset{11}{\leftrightarrow}$ BRWA $\overset{17}{\leftrightarrow}$ E	t: 20, a/f: 20-30
156	BSTO $\overset{4}{\leftrightarrow}$ BLST $\overset{11}{\leftrightarrow}$ BPLA	t: 20, So: –
158	BBU $\overset{47}{\leftrightarrow}$ BGSS	t: 20
160	BSW $\overset{25}{\leftrightarrow}$ BAGL	t: 20, a/f: 20
161	BRD $\overset{12}{\leftrightarrow}$ BWIG $\overset{12}{\leftrightarrow}$ BE	t: 20
162	BADL $\overset{14}{\leftrightarrow}$ R	H: 10, N: 20
163	BSW $\overset{10}{\leftrightarrow}$ BADL $\overset{14}{\leftrightarrow}$ BGAS $\overset{15}{\leftrightarrow}$ BFLH	t/f: 20, a: 30, Sa/So: 30
164	BKPK $\overset{18}{\leftrightarrow}$ BADL $\overset{16}{\leftrightarrow}$ BFLH	t: 20, f/a: 20
165	Mk $\overset{2}{\leftrightarrow}$ He $\overset{6}{\leftrightarrow}$ S $\overset{7}{\leftrightarrow}$ BTP $\overset{5}{\leftrightarrow}$ BPWD $\overset{9}{\leftrightarrow}$ BSW $\overset{11}{\leftrightarrow}$ BSPF	H: 10-20, N: 20
166	BSW $\overset{15}{\leftrightarrow}$ BPWD $\overset{6}{\leftrightarrow}$ BTP $\overset{11}{\leftrightarrow}$ Rk $\overset{5}{\leftrightarrow}$ Bo	t: 20
169	E $\overset{18}{\leftrightarrow}$ BKPK	H: 10, N: 20
170	BRST $\overset{9}{\leftrightarrow}$ BPRI $\overset{7}{\leftrightarrow}$ Ull $\overset{14}{\leftrightarrow}$ Bl $\overset{11}{\leftrightarrow}$ BBMW	t: 10-20, f/a: 20-30
171	Hpo $\overset{18}{\leftrightarrow}$ BSO $\overset{5}{\leftrightarrow}$ BNK $\overset{3}{\leftrightarrow}$ Gz $\overset{23}{\leftrightarrow}$ R $\overset{9}{\leftrightarrow}$ BFLH	H: 10-20, N: 20
172	R $\overset{23}{\leftrightarrow}$ Jt $\overset{27}{\leftrightarrow}$ BLRD	H: 10, N: 10-20
175	BLRD $\overset{23}{\rightarrow}$ BLRD $\overset{5}{\rightarrow}$ BSC $\overset{8}{\rightarrow}$ BLRD	H: 10-20, N: 20
181	Wsg $\overset{1}{\leftrightarrow}$ BFB $\overset{13}{\leftrightarrow}$ BLAK $\overset{12}{\leftrightarrow}$ Mf $\overset{12}{\leftrightarrow}$ Br	t: 5-10, f/a: 20

Linie	Fahrtweg	Takt
184	BLIO $\overset{10}{\leftrightarrow}$ BATS $\overset{9}{\leftrightarrow}$ Ka $\overset{3}{\leftrightarrow}$ At $\overset{2}{\leftrightarrow}$ BTHF ($\overset{7}{\leftrightarrow}$ BSKR, nur Mo-Sa tagsüber)	t: 10-20, a/f: 20
186	BGWD $\overset{14}{\leftrightarrow}$ Rd $\overset{4}{\leftrightarrow}$ Fw $\overset{5}{\leftrightarrow}$ Wsg $\overset{2}{\leftrightarrow}$ Slo $\overset{5}{\leftrightarrow}$ BRST $\overset{16}{\leftrightarrow}$ BOSS $\overset{4}{\leftrightarrow}$ BLIS	t: 5-20, a/f: 20
187	Tm $\overset{17}{\leftrightarrow}$ Nm $\overset{2}{\leftrightarrow}$ BS $\overset{3}{\leftrightarrow}$ Kt $\overset{7}{\leftrightarrow}$ BIP $\overset{3}{\leftrightarrow}$ BFRU $\overset{14}{\leftrightarrow}$ BLAK	H: 5-20, N: 20
188	BRST $\overset{5}{\leftrightarrow}$ BBGT	H: 10, N: 20
190	E $\overset{14}{\leftrightarrow}$ BWHH	t: 20, f/a: 20
191	BMAZ $\overset{17}{\leftrightarrow}$ KL $\overset{5}{\leftrightarrow}$ BWT	H: 10-20, N: 20
192	BFFO $\overset{12}{\leftrightarrow}$ BBDF $\overset{16}{\leftrightarrow}$ BMAZ	H: 10-20, N: 20
194	Hpo $\overset{18}{\leftrightarrow}$ BTP $\overset{5}{\leftrightarrow}$ BOK $\overset{3}{\leftrightarrow}$ BRH $\overset{1}{\leftrightarrow}$ BNPL $\overset{9}{\leftrightarrow}$ Fi $\overset{8}{\leftrightarrow}$ BFFO $\overset{7}{\leftrightarrow}$ BSPH	H: 10-20, N: 20
195	BMAZ $\overset{17}{\leftrightarrow}$ C $\overset{1}{\leftrightarrow}$ Hd $\overset{6}{\leftrightarrow}$ LL $\overset{11}{\leftrightarrow}$ BMDF	H: 6-7, N: 10, f/a: 20
197	BMDF $\overset{10}{\leftrightarrow}$ BKAD $\overset{3}{\leftrightarrow}$ KL $\overset{2}{\leftrightarrow}$ GK $\overset{20}{\leftrightarrow}$ BMEA $\overset{10}{\leftrightarrow}$ BAF $\overset{13}{\leftrightarrow}$ BHH	H: 10, N: 20
200	BZOS $\overset{14}{\leftrightarrow}$ BPOP $\overset{2}{\leftrightarrow}$ Mic $\overset{3}{\leftrightarrow}$ Sp $\overset{3}{\leftrightarrow}$ RHO $\overset{2}{\leftrightarrow}$ BALX	t: 10, f/a: 20
204	BSKR $\overset{5}{\leftrightarrow}$ BJLB $\overset{4}{\leftrightarrow}$ Kt $\overset{9}{\leftrightarrow}$ Sno $\overset{2}{\leftrightarrow}$ Kfo $\overset{3}{\leftrightarrow}$ BZOS	t: 20, So: –
218	BMN $\overset{4}{\leftrightarrow}$ Th $\overset{3}{\leftrightarrow}$ BHST $\overset{30}{\leftrightarrow}$ BWSS	Mo-Fr: 60/120, Sa/So: 30/60
220	BFOH $\overset{19}{\leftrightarrow}$ BWIN $\overset{6}{\leftrightarrow}$ RR ($\overset{9}{\leftrightarrow}$ BTG $\overset{4}{\leftrightarrow}$ Tg, nur Mo-Sa tagsüber)	t: 20, f/a: 20
221	BWIN $\overset{4}{\leftrightarrow}$ RR $\overset{4}{\leftrightarrow}$ BEBD $\overset{4}{\leftrightarrow}$ Scha $\overset{5}{\leftrightarrow}$ Sch $\overset{2}{\leftrightarrow}$ Afr $\overset{8}{\leftrightarrow}$ Am $\overset{6}{\leftrightarrow}$ Lpo	t: 10-20, f/a: 20

Linie	Fahrtweg	Takt
271	Zd $\overset{6}{\rightarrow}$ R $\overset{14}{\rightarrow}$ R $\overset{6}{\rightarrow}$ Zd	H: 10, N: 20, WE: 20
277	BHER $\overset{15}{\leftrightarrow}$ Mf $\overset{13}{\leftrightarrow}$ BBCH	H: 10, N: 20
282	Bt $\overset{5}{\leftrightarrow}$ Slo $\overset{4}{\leftrightarrow}$ BRST $\overset{8}{\leftrightarrow}$ BSDE $\overset{2}{\leftrightarrow}$ BATS $\overset{7}{\leftrightarrow}$ Wl	t: 10, f/a: 20
283	BRST $\overset{10}{\leftrightarrow}$ BLAK $\overset{11}{\leftrightarrow}$ BMF	H: 10-20, N: 20
284	BLIS $\overset{10}{\leftrightarrow}$ BLIO $\overset{6}{\leftrightarrow}$ BLAK ($\overset{10}{\leftrightarrow}$ BRST, nur Mo-Sa tagsüber)	t: 20, f/a: 20
285	Os $\overset{6}{\leftrightarrow}$ BZD $\overset{29}{\leftrightarrow}$ BRST	t: 10-20, f/a: 20, Sa-So: –
291	BMAZ $\overset{4}{\leftrightarrow}$ BPOE $\overset{12}{\leftrightarrow}$ KL $\overset{4}{\leftrightarrow}$ BWT	t: 20, So: –
296	BLI $\overset{4}{\leftrightarrow}$ Fi $\overset{10}{\leftrightarrow}$ Tk $\overset{13}{\leftrightarrow}$ BKLH	t: 10-20, f/a: 20
300	BPOP $\overset{5}{\leftrightarrow}$ MH $\overset{4}{\leftrightarrow}$ ULO $\overset{2}{\leftrightarrow}$ MUI $\overset{6}{\leftrightarrow}$ RHO $\overset{5}{\leftrightarrow}$ BALX $\overset{2}{\leftrightarrow}$ BJB $\overset{4}{\leftrightarrow}$ BOSB $\overset{7}{\leftrightarrow}$ BWRS	t: 10, f/a: 20
309	BCHS $\overset{7}{\leftrightarrow}$ So	t: 20
310	BCHS $\overset{3}{\leftrightarrow}$ Ad $\overset{18}{\leftrightarrow}$ BHEI $\overset{6}{\leftrightarrow}$ Bli	H: 20, N: –, Sa-So: –
322	PB $\overset{2}{\leftrightarrow}$ LD $\overset{6}{\leftrightarrow}$ BEBD $\overset{6}{\leftrightarrow}$ RR $\overset{7}{\leftrightarrow}$ BWAI	t: 20, Sa-So: –
327	Lpo $\overset{4}{\leftrightarrow}$ Np $\overset{5}{\leftrightarrow}$ FN $\overset{3}{\leftrightarrow}$ RE $\overset{9}{\leftrightarrow}$ BSNH	t: 20, So: –

Linie	Fahrtweg	Takt
N3	Wt $\overset{3}{\leftrightarrow}$ Kfo $\overset{3}{\leftrightarrow}$ Sno $\overset{1}{\leftrightarrow}$ Hz $\overset{2}{\leftrightarrow}$ Fpo $\overset{2}{\leftrightarrow}$ BHO $\overset{2}{\leftrightarrow}$ BHEI $\overset{5}{\leftrightarrow}$ Bt $\overset{4}{\leftrightarrow}$ DD $\overset{2}{\leftrightarrow}$ T $\overset{4}{\leftrightarrow}$ Os $\overset{4}{\leftrightarrow}$ K $\overset{2}{\leftrightarrow}$ BMEX	n: 30, WE: –
N5	BHBF $\overset{6}{\leftrightarrow}$ BTOR $\overset{2}{\leftrightarrow}$ ULO $\overset{2}{\leftrightarrow}$ MUI $\overset{7}{\leftrightarrow}$ BALX $\overset{2}{\leftrightarrow}$ Al $\overset{2}{\leftrightarrow}$ Si $\overset{2}{\leftrightarrow}$ Sr $\overset{2}{\leftrightarrow}$ WR $\overset{2}{\leftrightarrow}$ Ft $\overset{2}{\leftrightarrow}$ Sa $\overset{2}{\leftrightarrow}$ BFA $\overset{2}{\leftrightarrow}$ Md $\overset{13}{\leftrightarrow}$ BWT $\overset{4}{\leftrightarrow}$ KL $\overset{2}{\leftrightarrow}$ GK $\overset{2}{\leftrightarrow}$ C $\overset{2}{\leftrightarrow}$ Hd $\overset{4}{\leftrightarrow}$ LL $\overset{1}{\leftrightarrow}$ Hö	n: 15-30, WE: –
N6	Tg $\overset{2}{\leftrightarrow}$ Bk $\overset{2}{\leftrightarrow}$ Hh $\overset{4}{\leftrightarrow}$ Scha $\overset{3}{\leftrightarrow}$ Sch $\overset{3}{\leftrightarrow}$ Afr $\overset{1}{\leftrightarrow}$ Rb $\overset{3}{\leftrightarrow}$ Se $\overset{3}{\leftrightarrow}$ Lpo $\overset{1}{\leftrightarrow}$ BWED $\overset{2}{\leftrightarrow}$ Ri $\overset{2}{\leftrightarrow}$ Sk $\overset{2}{\leftrightarrow}$ NA $\overset{2}{\leftrightarrow}$ Ob $\overset{1}{\leftrightarrow}$ BFST $\overset{2}{\leftrightarrow}$ ULO $\overset{1}{\leftrightarrow}$ Mi $\overset{2}{\leftrightarrow}$ Ks $\overset{10-15}{\leftrightarrow}$ Me $\overset{1}{\leftrightarrow}$ PL $\overset{2}{\leftrightarrow}$ Ps $\overset{1}{\leftrightarrow}$ BTHF $\overset{2}{\leftrightarrow}$ At $\overset{2}{\leftrightarrow}$ Ka $\overset{2}{\leftrightarrow}$ Ull $\overset{2}{\leftrightarrow}$ Wl $\overset{2}{\leftrightarrow}$ Mf	n: 30, WE: –
N7	BSPA $\overset{2}{\leftrightarrow}$ AS $\overset{1}{\leftrightarrow}$ Zi $\overset{2}{\leftrightarrow}$ Hs $\overset{2}{\leftrightarrow}$ P $\overset{2}{\leftrightarrow}$ Rm $\overset{2}{\leftrightarrow}$ Sie $\overset{5}{\leftrightarrow}$ JK $\overset{3}{\leftrightarrow}$ BJUN $\overset{2}{\leftrightarrow}$ Mp $\overset{2}{\leftrightarrow}$ Rw $\overset{2}{\leftrightarrow}$ Bmo $\overset{3}{\leftrightarrow}$ BCHS $\overset{5}{\leftrightarrow}$ Ad $\overset{3}{\leftrightarrow}$ Kn $\overset{1}{\leftrightarrow}$ Fpo $\overset{2}{\leftrightarrow}$ Bli $\overset{7}{\leftrightarrow}$ Beo $\overset{1}{\leftrightarrow}$ Bpo $\overset{1}{\leftrightarrow}$ Ei $\overset{2}{\leftrightarrow}$ Kt $\overset{2}{\leftrightarrow}$ BGGS $\overset{1}{\leftrightarrow}$ BYOR $\overset{3}{\leftrightarrow}$ Me $\overset{2}{\leftrightarrow}$ Gs $\overset{3}{\leftrightarrow}$ Sü $\overset{5}{\leftrightarrow}$ Hpo $\overset{3}{\leftrightarrow}$ Hpo $\overset{3}{\leftrightarrow}$ Rk $\overset{7}{\leftrightarrow}$ BNK $\overset{2}{\leftrightarrow}$ Gz $\overset{17}{\leftrightarrow}$ R	n: 30, WE: –
N7	R $\overset{8}{\leftrightarrow}$ BFLH $\overset{11}{\leftrightarrow}$ BFBB	n: 30
N7X	BZOS $\overset{2}{\rightarrow}$ Kfo $\overset{3}{\rightarrow}$ Sno $\overset{1}{\rightarrow}$ Gt $\overset{2}{\rightarrow}$ Beo $\overset{5}{\rightarrow}$ BSGR $\overset{6}{\rightarrow}$ At $\overset{20}{\rightarrow}$ BFLH $\overset{9}{\rightarrow}$ BFBB	n: 15, WE: –
N8	BWIN $\overset{3}{\leftrightarrow}$ RR $\overset{3}{\leftrightarrow}$ BKBO $\overset{2}{\leftrightarrow}$ LD $\overset{2}{\leftrightarrow}$ PB $\overset{3}{\leftrightarrow}$ RE $\overset{2}{\leftrightarrow}$ FN $\overset{4}{\leftrightarrow}$ Olo $\overset{3}{\leftrightarrow}$ Pk $\overset{2}{\leftrightarrow}$ BGB $\overset{3}{\leftrightarrow}$ Vo $\overset{1}{\leftrightarrow}$ B $\overset{2}{\leftrightarrow}$ Ro $\overset{1}{\leftrightarrow}$ W $\overset{4}{\leftrightarrow}$ BALX $\overset{4}{\leftrightarrow}$ BJB $\overset{2}{\leftrightarrow}$ He $\overset{2}{\leftrightarrow}$ Mr $\overset{5-6}{\leftrightarrow}$ Kbo $\overset{2-3}{\leftrightarrow}$ ST $\overset{2}{\leftrightarrow}$ Hpo $\overset{1}{\leftrightarrow}$ Bo $\overset{2}{\leftrightarrow}$ L $\overset{2}{\leftrightarrow}$ BHER	n: 10-30, WE: –
N9	Olo $\overset{3}{\leftrightarrow}$ Np $\overset{5}{\leftrightarrow}$ Lpo $\overset{2}{\leftrightarrow}$ Am $\overset{2}{\leftrightarrow}$ BWF $\overset{1}{\leftrightarrow}$ Bi $\overset{1}{\leftrightarrow}$ Tm $\overset{3}{\leftrightarrow}$ BTGN $\overset{7}{\leftrightarrow}$ BZOS $\overset{2}{\leftrightarrow}$ Kfo $\overset{3}{\leftrightarrow}$ Sno $\overset{1}{\leftrightarrow}$ Gt $\overset{2}{\leftrightarrow}$ Beo $\overset{3}{\leftrightarrow}$ BBUP $\overset{2}{\leftrightarrow}$ Fw $\overset{3}{\leftrightarrow}$ Wsg $\overset{1}{\leftrightarrow}$ Slo $\overset{3}{\leftrightarrow}$ BRST	n: 15-30, WE: –

Linie	Fahrtweg	Takt
N61	BRD (nur am WE) $\overset{8}{\leftrightarrow}$ WIG	n: 30
N64	BWT $\overset{3}{\leftrightarrow}$ BKAD $\overset{15}{\leftrightarrow}$ BKPK $\overset{15}{\leftrightarrow}$ BSPF $\overset{5}{\leftrightarrow}$ BADL	n: 30
N65	BALX $\overset{4}{\leftrightarrow}$ BJB $\overset{1}{\leftrightarrow}$ He $\overset{5}{\leftrightarrow}$ S $\overset{6}{\leftrightarrow}$ BTP $\overset{3}{\leftrightarrow}$ BPWA $\overset{12}{\leftrightarrow}$ BSW $\overset{3}{\leftrightarrow}$ BADL $\overset{4}{\leftrightarrow}$ BSPF $\overset{17}{\leftrightarrow}$ BFRH	n: 30
N68	BADL $\overset{4}{\leftrightarrow}$ BGAS	n: 30
N77	BPWA $\overset{5}{\leftrightarrow}$ BSO $\overset{2}{\leftrightarrow}$ BNK $\overset{5}{\leftrightarrow}$ BHER $\overset{11}{\leftrightarrow}$ Mf	n: 30

Linie	Fahrtweg	Takt
222	Tg $\overset{3}{\leftrightarrow}$ BTG $\overset{9}{\leftrightarrow}$ BWAI	t: 10-20, f/a: 20
237	BSPA $\overset{19}{\leftrightarrow}$ BAS	t: 10-20, f/a: 20
240	BOSB $\overset{17}{\leftrightarrow}$ BRH $\overset{1}{\leftrightarrow}$ BNPL $\overset{6}{\leftrightarrow}$ BLI $\overset{5}{\leftrightarrow}$ Md $\overset{11}{\leftrightarrow}$ BSTO	t: 10-20, f/a: 20
245	BZOS $\overset{5}{\leftrightarrow}$ RP $\overset{13}{\leftrightarrow}$ Tm $\overset{9}{\leftrightarrow}$ BHBF	t: 5-20, f/a: 20
246	Fw $\overset{12}{\leftrightarrow}$ BPRI $\overset{11}{\leftrightarrow}$ At $\overset{11}{\leftrightarrow}$ BHER $\overset{3}{\leftrightarrow}$ Nk $\overset{5}{\leftrightarrow}$ BSO $\overset{4}{\leftrightarrow}$ BKHD	H: 10, N: 20
247	Lpo $\overset{4}{\leftrightarrow}$ Np $\overset{3}{\leftrightarrow}$ BWED $\overset{3}{\leftrightarrow}$ BHUM $\overset{3}{\leftrightarrow}$ BGB $\overset{9}{\leftrightarrow}$ B $\overset{1}{\leftrightarrow}$ Vo $\overset{7}{\leftrightarrow}$ BNB	t: 10-20, f/a: 20
248	BALX $\overset{5}{\leftrightarrow}$ Sp $\overset{9}{\leftrightarrow}$ Ho $\overset{4}{\leftrightarrow}$ Gs $\overset{7}{\leftrightarrow}$ PL $\overset{9}{\leftrightarrow}$ BSKR ($\overset{4}{\leftrightarrow}$ BSGR $\overset{3}{\leftrightarrow}$ BIP $\overset{4}{\leftrightarrow}$ BBUP $\overset{6}{\leftrightarrow}$ Bt, nur Mo-Sa tagsüber)	t: 10-20, f/a: 20
249	BZOS $\overset{3}{\leftrightarrow}$ Kfo $\overset{6}{\leftrightarrow}$ Hz $\overset{3}{\leftrightarrow}$ Bli $\overset{4}{\leftrightarrow}$ BHEI	t: 10, f/a: 20
250	BPKW $\overset{8}{\leftrightarrow}$ VIN ($\overset{11}{\leftrightarrow}$ BWOK $\overset{7}{\leftrightarrow}$ FN, nur Mo-Sa tagsüber)	t: 10-20, f/a: 20
255	BPKW $\overset{7}{\leftrightarrow}$ BWOK $\overset{7}{\leftrightarrow}$ Olo	t: 10, f/a: 20
256	BWAB $\overset{4}{\leftrightarrow}$ BHH $\overset{26}{\leftrightarrow}$ BLI	t: 20, f/a: 20
260	BADL $\overset{24}{\leftrightarrow}$ R	t: 10-20, f/a: 20
263	BGAS $\overset{25}{\leftrightarrow}$ BFBB	t: 60
265N	Mi $\overset{3}{\leftrightarrow}$ Sp → weiter als 147N nach HBF	t: 20, f/a: 20
265S	BSW $\overset{16}{\leftrightarrow}$ BBMW $\overset{11}{\leftrightarrow}$ BTP $\overset{7}{\leftrightarrow}$ S $\overset{6}{\leftrightarrow}$ He $\overset{2}{\leftrightarrow}$ Mk	t: 20, f/a: 20
269	KL $\overset{3}{\leftrightarrow}$ BKAD $\overset{21}{\leftrightarrow}$ BKPK	t: 20, f/a: 20

Linie	Fahrtweg	Takt
347	BOK $\overset{9}{\leftrightarrow}$ BWRS ($\overset{6}{\leftrightarrow}$ WR $\overset{5}{\leftrightarrow}$ BOSB, nur Mo-Sa tagsüber)	t: 20, a/f: 20
349	BGWD $\overset{3}{\rightarrow}$ BMS $\overset{8}{\rightarrow}$ Th $\overset{4}{\rightarrow}$ Nd $\overset{5}{\rightarrow}$ BHST $\overset{3}{\rightarrow}$ Th $\overset{5}{\rightarrow}$ BMS $\overset{2}{\rightarrow}$ BGWD	t: 40, Sa-So: –
377	BPWD $\overset{13}{\leftrightarrow}$ BNK $\overset{5}{\leftrightarrow}$ BHER	t: 20, f/a: 20
395	BMDF $\overset{18}{\rightarrow}$ Hö $\overset{14}{\rightarrow}$ BMDF	t: 20, f/a: 20
398	BMDF $\overset{21}{\leftrightarrow}$ E	t: 20, So: –
620	BWSS $\overset{35}{\leftrightarrow}$ BTLS	t: 20, WE: 30
622	K $\overset{2}{\leftrightarrow}$ BMEX	t: 20, a: 30, WE: 30
623	Os $\overset{8}{\leftrightarrow}$ BZD	t: 20, a: 30, WE: 30
743	BFBB $\overset{14}{\leftrightarrow}$ BFLH ($\overset{6}{\leftrightarrow}$ BWAF $\overset{17}{\leftrightarrow}$ BLRD, alle 60min)	t:30, WE: 60
744	La $\overset{24}{\leftrightarrow}$ R $\overset{15}{\leftrightarrow}$ BFLH	t: 20, a: 60, So: 60
893	BZEP $\overset{13}{\leftrightarrow}$ BBU $\overset{33}{\leftrightarrow}$ BHH	t: 20, Sa/So: 60
N1	BWRS $\overset{3}{\leftrightarrow}$ S $\overset{4}{\leftrightarrow}$ Gr $\overset{2}{\leftrightarrow}$ Kbo $\overset{1}{\leftrightarrow}$ Pr $\overset{2}{\leftrightarrow}$ Ho $\overset{4}{\leftrightarrow}$ Mo $\overset{2}{\leftrightarrow}$ MB $\overset{3}{\leftrightarrow}$ Kus $\overset{1}{\leftrightarrow}$ BS $\overset{1}{\leftrightarrow}$ Nm $\overset{3}{\leftrightarrow}$ Wt $\overset{3}{\leftrightarrow}$ Kfo $\overset{1}{\leftrightarrow}$ BZOS	n: 15-30, WE: –
N2	Rl $\overset{5}{\leftrightarrow}$ Nd $\overset{2}{\leftrightarrow}$ Th $\overset{1}{\leftrightarrow}$ Kd $\overset{2}{\leftrightarrow}$ So $\overset{3}{\leftrightarrow}$ Bmo $\overset{2}{\leftrightarrow}$ Obi $\overset{2}{\leftrightarrow}$ RP $\overset{9}{\leftrightarrow}$ BZOS $\overset{2}{\leftrightarrow}$ Kfo $\overset{3}{\leftrightarrow}$ Wt $\overset{3}{\leftrightarrow}$ Nm $\overset{1}{\leftrightarrow}$ BS $\overset{1}{\leftrightarrow}$ Kus $\overset{5}{\leftrightarrow}$ BPOP $\overset{2}{\leftrightarrow}$ Mic $\overset{3}{\leftrightarrow}$ Sp $\overset{2}{\leftrightarrow}$ RHO $\overset{8}{\leftrightarrow}$ BALX $\overset{4}{\leftrightarrow}$ Lu $\overset{1}{\leftrightarrow}$ Sz $\overset{3}{\leftrightarrow}$ EB $\overset{3}{\leftrightarrow}$ BSAL $\overset{3}{\leftrightarrow}$ VIN $\overset{3}{\leftrightarrow}$ BPKW	n: 15-30, WE: –

Linie	Fahrtweg	Takt
N10	BZOS $\overset{2}{\leftrightarrow}$ Kfo $\overset{1}{\leftrightarrow}$ U $\overset{5}{\leftrightarrow}$ Ad $\overset{5}{\leftrightarrow}$ BHO $\overset{13}{\leftrightarrow}$ Os $\overset{9}{\leftrightarrow}$ BZD	n: 30
N16	BNIS $\overset{4}{\leftrightarrow}$ BWSS $\overset{21}{\leftrightarrow}$ BPDH	n: 60
N20	BFOH $\overset{13}{\leftrightarrow}$ BWIN $\overset{7}{\leftrightarrow}$ PB $\overset{9}{\leftrightarrow}$ Se $\overset{4-8}{\leftrightarrow}$ Lpo $\overset{1-6}{\leftrightarrow}$ BWED $\overset{1}{\leftrightarrow}$ Ri $\overset{6}{\leftrightarrow}$ BHBF	n: 30
N22	Tg $\overset{3}{\leftrightarrow}$ BTG $\overset{8}{\leftrightarrow}$ BWAI	n: 30
N24	BWIN $\overset{9}{\leftrightarrow}$ BTG $\overset{3-8}{\leftrightarrow}$ Tg $\overset{8-13}{\leftrightarrow}$ BSZF $\overset{4}{\leftrightarrow}$ BHLS	n: 30
N25	BTG $\overset{2}{\leftrightarrow}$ Tg $\overset{10}{\leftrightarrow}$ BHED	n: 30
N26	Se $\overset{7}{\leftrightarrow}$ BBEU $\overset{8}{\leftrightarrow}$ Ha $\overset{5}{\leftrightarrow}$ Nm $\overset{3}{\leftrightarrow}$ Wt $\overset{3}{\leftrightarrow}$ Kfo $\overset{1}{\leftrightarrow}$ BZOS	n: 30
N33	Tg $\overset{3}{\leftrightarrow}$ BTG $\overset{4}{\leftrightarrow}$ Hh $\overset{20}{\leftrightarrow}$ Hs	n: 30
N39	Rm $\overset{2}{\leftrightarrow}$ P	n: 30
N40	Tm $\overset{7}{\leftrightarrow}$ BHBF $\overset{3}{\leftrightarrow}$ NA $\overset{1}{\leftrightarrow}$ BNB $\overset{3}{\leftrightarrow}$ Ro $\overset{1}{\leftrightarrow}$ W $\overset{3}{\leftrightarrow}$ BALX $\overset{4}{\leftrightarrow}$ BJB $\overset{4}{\leftrightarrow}$ BOSB	n: 30
N42	BSKR $\overset{10}{\leftrightarrow}$ PL $\overset{7}{\leftrightarrow}$ Me $\overset{2}{\leftrightarrow}$ Ho $\overset{6}{\leftrightarrow}$ Sp $\overset{3}{\leftrightarrow}$ RHO $\overset{2}{\leftrightarrow}$ BHKM $\overset{2}{\leftrightarrow}$ W $\overset{2}{\leftrightarrow}$ BALX	n: 30
N43	Th $\overset{5}{\leftrightarrow}$ BHAL $\overset{8}{\leftrightarrow}$ Fpo $\overset{2}{\leftrightarrow}$ Bli $\overset{2}{\leftrightarrow}$ Beo	n: 30
N50	Tk $\overset{5}{\leftrightarrow}$ Fi $\overset{2}{\leftrightarrow}$ BLI $\overset{3}{\leftrightarrow}$ Md $\overset{36}{\leftrightarrow}$ BPKW $\overset{4}{\leftrightarrow}$ BPHD	n: 30
N52	Olo $\overset{5}{\leftrightarrow}$ BSNH	n: 30
N56	Md $\overset{23}{\rightarrow}$ BHH $\overset{3}{\rightarrow}$ BWAB $\overset{7}{\rightarrow}$ BGSE $\overset{16}{\rightarrow}$ Md	n: 30
N60	BALX $\overset{4}{\leftrightarrow}$ BJB $\overset{1}{\leftrightarrow}$ He $\overset{5}{\leftrightarrow}$ S $\overset{6}{\leftrightarrow}$ BTP $\overset{3}{\leftrightarrow}$ BPWA $\overset{7}{\leftrightarrow}$ BSW $\overset{7}{\leftrightarrow}$ BADL $\overset{21}{\leftrightarrow}$ BFLH $\overset{10}{\leftrightarrow}$ BFBB	n: 30

Linie	Fahrtweg	Takt
N81	Wsg $\overset{1}{\leftrightarrow}$ BFB $\overset{11}{\leftrightarrow}$ BLAK $\overset{11}{\leftrightarrow}$ BMF	n: 30
N84	BTHF $\overset{2}{\leftrightarrow}$ At $\overset{8}{\leftrightarrow}$ BATS $\overset{8}{\leftrightarrow}$ BLIO $\overset{17}{\leftrightarrow}$ BZD	n: 30
N88	BRST $\overset{3}{\leftrightarrow}$ BBGT $\overset{17}{\leftrightarrow}$ BOSS $\overset{3}{\leftrightarrow}$ BLIS	n: 30
N90	BWT $\overset{6}{\leftrightarrow}$ BMDF $\overset{15}{\leftrightarrow}$ BKPK	n: 30
N91	BWT $\overset{5}{\leftrightarrow}$ KL	n: 30
N94	Hpo $\overset{3}{\leftrightarrow}$ Rk $\overset{10}{\leftrightarrow}$ BTP $\overset{3}{\leftrightarrow}$ BOK $\overset{1}{\leftrightarrow}$ BRH $\overset{1}{\leftrightarrow}$ BNPL $\overset{4}{\leftrightarrow}$ BLI $\overset{4}{\leftrightarrow}$ Md	n: 30