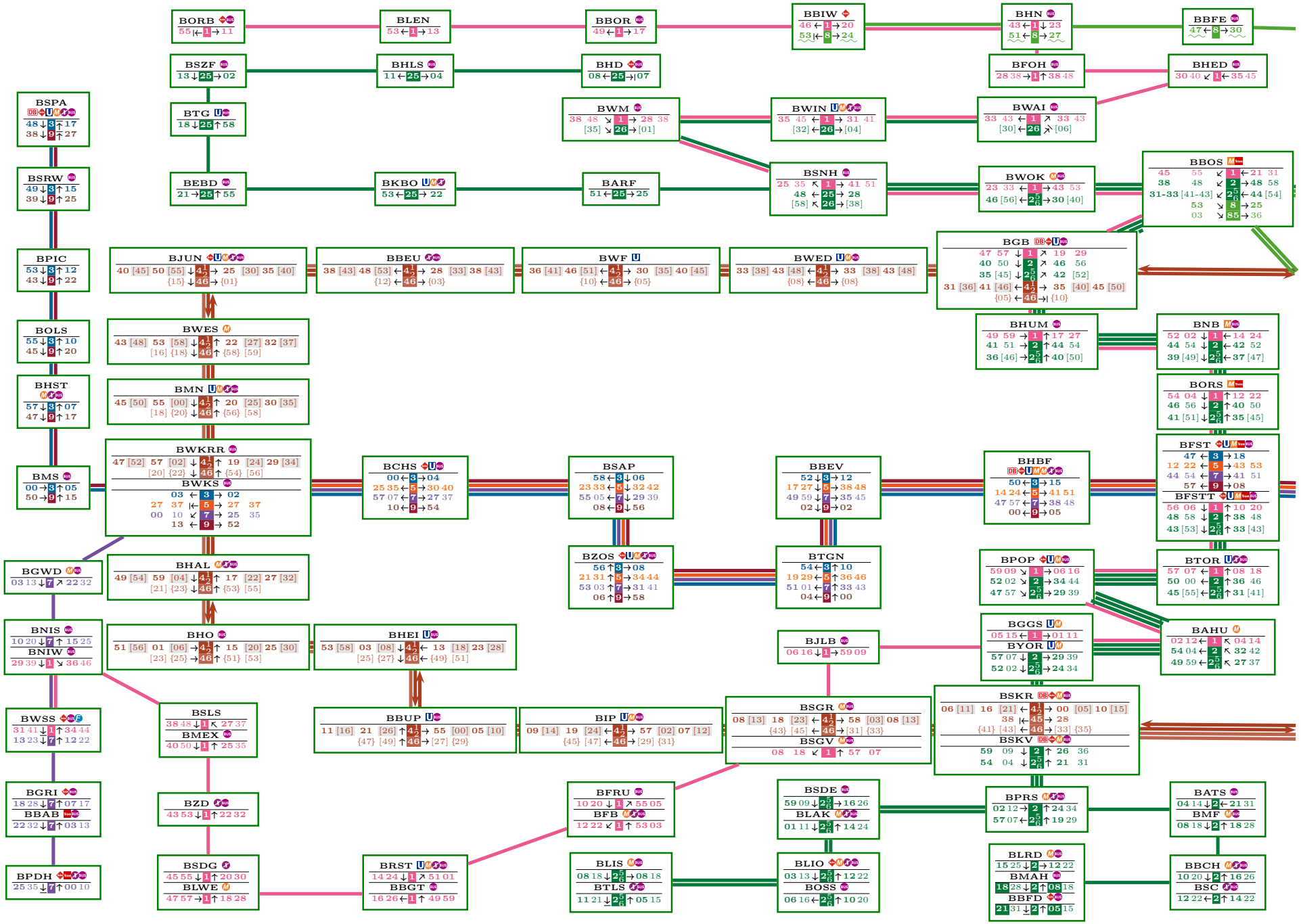
BORB
55 ← 1 → 11
BLEN
53 ← 1 → 13
BBOR
49 ← 1 → 17
BBIW
46 ← 1 → 20
53 ← 8 → 24
BHN
43 ← 1 ↓ 23
51 ← 8 → 27
BBFE
47 ← 8 → 30
BSZF
13 ↓ 25 → 02
BHLS
11 ← 25 → 04
BHD
08 ← 25 → 07
BFOH
28 38 → 1 ↑ 38 48
BHED
30 40 ↙ 1 ← 35 45
BSPA
48 ↓ 3 ↑ 17
38 ↓ 9 ↑ 27
BTG
18 ↓ 25 ↑ 58
BWM
38 48 ↘ 1 → 28 38
[35] ↘ 26 → [01]
BWIN
35 45 ← 1 → 31 41
[32] ← 26 → [04]
BWAI
33 43 ← 1 ↗ 33 43
[30] ← 26 ↗ [06]
BSRW
49 ↓ 3 ↑ 15
39 ↓ 9 ↑ 25
BEBD
21 → 25 ↑ 55
BKBO
53 ← 25 → 22
BARF
51 ← 25 → 25
BSNH
25 35 ↖ 1 → 41 51
48 ← 25 → 28
[58] ↖ 26 → [38]
BWOK
23 33 ← 1 → 43 53
46 [56] ← 2 5/6 → 30 [40]
BBOS
45 55 ↙ 1 ← 21 31
38 48 ↙ 2 → 48 58
31-33 [41-43] ↙ 2 5/6 ← 44 [54]
53 ↘ 8 → 25
03 ↘ 35 → 36
BPIC
53 ↓ 3 ↑ 12
43 ↓ 9 ↑ 22
BJUN
40 [45] 50 [55] ↓ 4 1/2 → 25 [30] 35 [40]
{15} ↓ 46 → {01}
BBEU
38 [43] 48 [53] ← 4 1/2 → 28 [33] 38 [43]
{12} ← 46 → {03}
BWF
36 [41] 46 [51] ← 4 1/2 → 30 [35] 40 [45]
{10} ← 46 → {05}
BWED
33 [38] 43 [48] ← 4 1/2 → 33 [38] 43 [48]
{08} ← 46 → {08}
BGB
47 57 ↓ 1 ↗ 19 29
40 50 ↓ 2 ↗ 46 56
35 [45] ↓ 2 5/6 ↗ 42 [52]
31 [36] 41 [46] ← 4 1/2 → 35 [40] 45 [50]
{05} ← 46 → {10}
BOLS
55 ↓ 3 ↑ 10
45 ↓ 9 ↑ 20
BWES
43 [48] 53 [58] ↓ 4 1/2 ↑ 22 [27] 32 [37]
[16] {18} ↓ 46 ↑ {58} [59]
BHUM
49 59 → 1 ↑ 17 27
41 51 → 2 ↑ 44 54
36 [46] → 2 5/6 ↑ 40 [50]
BNB
52 02 ↓ 1 ← 14 24
44 54 ↓ 2 ← 42 52
39 [49] ↓ 2 5/6 ← 37 [47]
BHST
57 ↓ 3 ↑ 07
47 ↓ 9 ↑ 17
BMN
45 [50] 55 [00] ↓ 4 1/2 ↑ 20 [25] 30 [35]
[18] {20} ↓ 46 ↑ {56} [58]
BORS
54 04 ↓ 1 ↑ 12 22
46 56 ↓ 2 ↑ 40 50
41 [51] ↓ 2 5/6 ↑ 35 [45]
BMS
00 → 3 ↑ 05
50 → 9 ↑ 15
BWKRR
47 [52] 57 [02] ↓ 4 1/2 ↑ 19 [24] 29 [34]
[20] {22} ↓ 46 ↑ {54} [56]
BWKS
03 ← 3 → 02
27 37 |← 5 → 27 37
00 10 ↙ 7 → 25 35
13 ← 9 → 52
BCHS
00 ← 3 → 04
25 35 ← 5 → 30 40
57 07 ← 7 → 27 37
10 ← 9 → 54
BSAP
58 ← 3 ↓ 06
23 33 ← 5 ↓ 32 42
55 05 ← 7 ↓ 29 39
08 ← 9 ↓ 56
BBEV
52 ↓ 3 → 12
17 27 ↓ 5 → 38 48
49 59 ↓ 7 → 35 45
02 ↓ 9 → 02
BHBF
50 ← 3 → 15
14 24 ← 5 → 41 51
47 57 ← 7 → 38 48
00 ← 9 → 05
BFST
47 ← 3 → 18
12 22 ← 5 → 43 53
44 54 ← 7 → 41 51
57 ← 9 → 08
BFSTT
56 06 ↓ 1 ↑ 10 20
48 58 ↓ 2 ↑ 38 48
43 [53] ↓ 2 5/6 ↑ 33 [43]
BGWD
03 13 ↓ 7 ↗ 22 32
BHAL
49 [54] 59 [04] ↓ 4 1/2 ↑ 17 [22] 27 [32]
[21] {23} ↓ 46 ↑ {53} [55]
BZOS
56 ↑ 3 → 08
21 31 ↑ 5 → 34 44
53 03 ↑ 7 → 31 41
06 ↑ 9 → 58
BTGN
54 ← 3 ↑ 10
19 29 ← 5 ↑ 36 46
51 01 ← 7 ↑ 33 43
04 ← 9 ↑ 00
BPOP
59 09 ↘ 1 → 06 16
52 02 ↘ 2 → 34 44
47 57 ↘ 2 5/6 → 29 39
BTOR
57 07 ← 1 ↑ 08 18
50 00 ← 2 ↑ 36 46
45 [55] ← 2 5/6 ↑ 31 [41]
BNIS
10 20 ↓ 7 ↑ 15 25
BNIW
29 39 ↓ 1 ↘ 36 46
BHO
51 [56] 01 [06] → 4 1/2 ↑ 15 [20] 25 [30]
[23] {25} → 46 ↑ {51} [53]
BHEI
53 [58] 03 [08] ↓ 4 1/2 ← 13 [18] 23 [28]
[25] {27} ↓ 46 ← {49} [51]
BJLB
06 16 ↓ 1 → 59 09
BGGS
05 15 ← 1 → 01 11
BYOR
57 07 ↓ 2 → 29 39
52 02 ↓ 2 5/6 → 24 34
BAHU
02 12 ← 1 ↖ 04 14
54 04 ← 2 ↖ 32 42
49 59 ← 2 5/6 ↖ 27 37
BWSS
31 41 ↓ 1 ↑ 34 44
13 23 ↓ 7 ↑ 12 22
BSLS
38 48 ↓ 1 ↖ 27 37
BMEX
40 50 ↓ 1 ↑ 25 35
BBUP
11 [16] 21 [26] ↑ 4 1/2 → 55 [00] 05 [10]
{47} [49] ↑ 46 → [27] {29}
BIP
09 [14] 19 [24] ← 4 1/2 → 57 [02] 07 [12]
{45} [47] ← 46 → [29] {31}
BSGR
08 [13] 18 [23] ← 4 1/2 → 58 [03] 08 [13]
{43} [45] ← 46 → [31] {33}
BSGV
08 18 ↙ 1 ↑ 57 07
BSKR
06 [11] 16 [21] ← 4 1/2 → 00 [05] 10 [15]
38 |← 45 → 28
{41} [43] ← 46 → [33] {35}
BSKV
59 09 ↓ 2 ↑ 26 36
54 04 ↓ 2 5/6 ↑ 21 31
BGRI
18 28 ↓ 7 ↑ 07 17
BBAB
22 32 ↓ 7 ↑ 03 13
BZD
43 53 ↓ 1 ↑ 22 32
BFRU
10 20 ↓ 1 ↗ 55 05
BFB
12 22 ↙ 1 ↑ 53 03
BSDE
59 09 ↓ 2 5/6 → 16 26
BLAK
01 11 ↓ 2 5/6 ↑ 14 24
BPRS
02 12 → 2 ↑ 24 34
57 07 ← 2 5/6 ↑ 19 29
BATS
04 14 ↓ 2 ← 21 31
BMF
08 18 ↓ 2 ↑ 18 28
BPDH
25 35 ↓ 7 ↑ 00 10
BSDG
45 55 ↓ 1 ↑ 20 30
BLWE
47 57 → 1 ↑ 18 28
BRST
14 24 ↓ 1 ↗ 51 01
BBGT
16 26 ← 1 ↑ 49 59
BLIS
08 18 ↓ 2 5/6 → 08 18
BTLS
11 21 ↓ 2 5/6 ↑ 05 15
BLIO
03 13 ↓ 2 5/6 ↑ 12 22
BOSS
06 16 ← 2 5/6 ↑ 10 20
BLRD
15 25 ↓ 2 → 12 22
BMAH
18 28 ↓ 2 ↑ 08 18
BBFD
21 31 ↓ 2 ↑ 05 15
BBCH
10 20 ↓ 2 ↑ 16 26
BSC
12 22 ← 2 ↑ 14 22

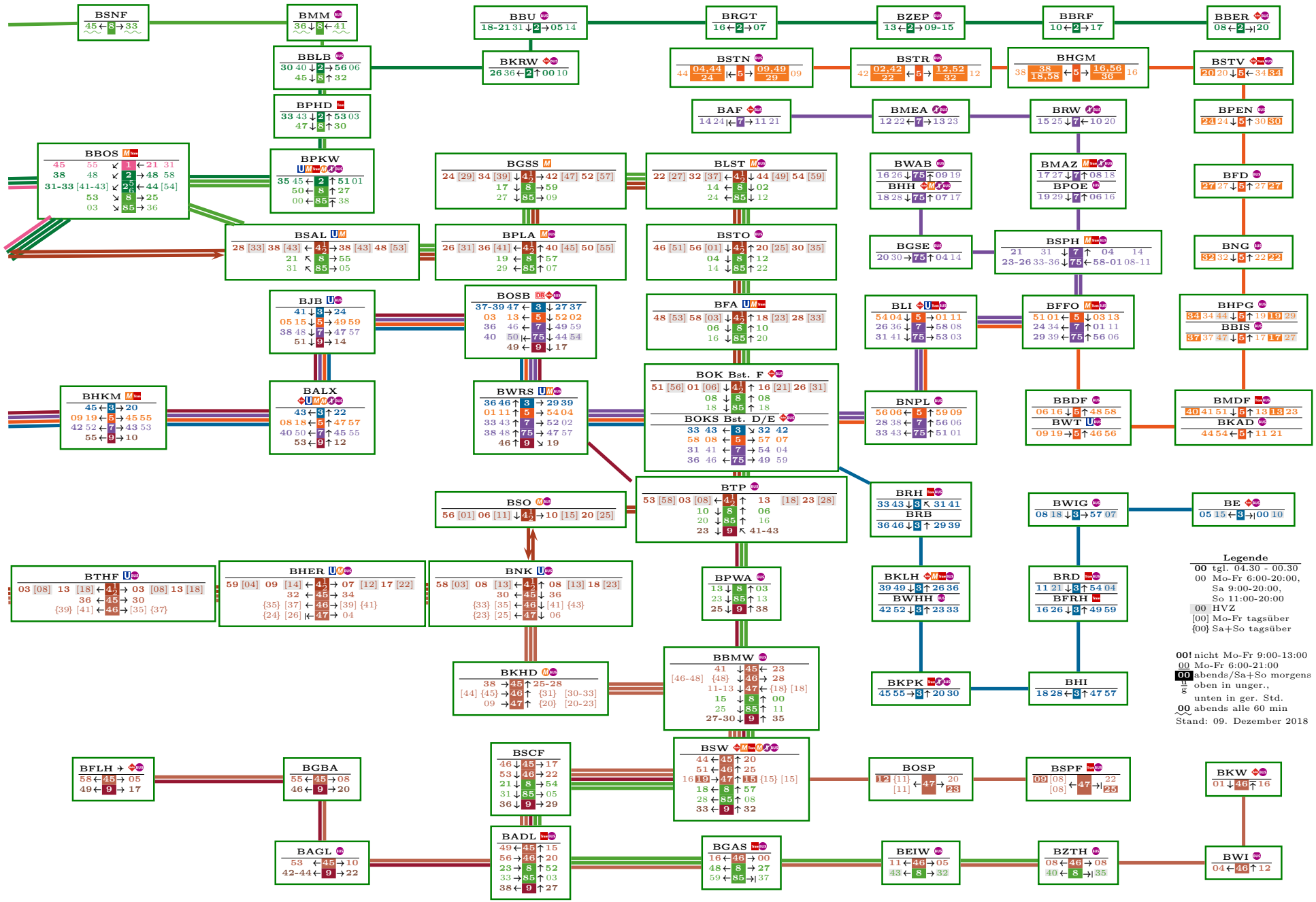
BSNF
BMM
BBU
BRGT
BZEP
BBRF
BBER
BBLB
BKRW
BSTN
BSTR
BHGM
BSTV
BPHD
BAF
BMEA
BRW
BPEN
BBOS
BPKW
BGSS
BLST
BWAB
BMAZ
BFD
BSAL
BPLA
BSTO
BGSE
BSPH
BNG
BJB
BOSB
BFA
BLI
BFFO
BHPG
BHKM
BALX
BWRS
BOK Bst. F
BNPL
BBDF
BMDF
BTP
BRH
BWIG
BE
BSO
BTHF
BHER
BNK
BPWA
BKLH
BRD
BKHD
BBMW
BKPK
BHI
BFLH
BGBA
BSCF
BSW
BOSP
BSPF
BKW
BAGL
BADL
BGAS
BEIW
BZTH
BWI
Legende
00 tgl. 04.30 - 00.30
00 Mo-Fr 6:00-20:00, Sa 9:00-20:00, So 11:00-20:00
00 HVZ
[00] Mo-Fr tagsüber
{00} Sa+So tagsüber
00! nicht Mo-Fr 9:00-13:00
00 Mo-Fr 6:00-21:00
00 abends/Sa+So morgens
u oben in unger.,
g unten in ger. Std.
00 abends alle 60 min
Stand: 09. Dezember 2018

| | S1 P (Mo-Fr) | | | | | | | | S1 P (Sa) | | | | | | S1 P (So) | | | | | | | | | |
|---|---|---|---|---|---|---|---|---|---|---|---|---|---|---|---|---|---|---|---|---|---|---|---|---|
| BWSS | 00:14 | 00:34 | 00:54 | | | 04:14 | 20 | 23:54 | 00:14 | 00:34 | NV | 04:54 | 20 | 23:54 | 00:14 | 00:34 | NV | 06:54 | 20 | 20:34 | 20:54 | 21:14 | 20 | 23:54 |
| BZD | 00:23 | 00:43 | 01:03 | | 04:03 | 04:23 | | 00:03 | 00:23 | 00:43 | | 05:03 | | 00:03 | 00:23 | 00:43 | | 07:03 | | 20:43 | 21:03 | 21:23 | | 00:03 |
| BSGV | 00:37 | 00:57 | 01:17 | 03:57 | 04:17 | 04:37 | | 00:17 | 00:37 | 00:57 | | 05:17 | | 00:17 | 00:37 | 00:57 | | 07:17 | | 20:57 | 21:17 | 21:37 | | 00:17 |
| BNB | 00:54 | 01:14 | 01:34 | 04:14 | 04:34 | 04:54 | | 00:34 | 00:54 | 01:14 | | 05:34 | | 00:34 | 00:54 | 01:14 | | 07:34 | | 21:14 | 21:34 | 21:54 | | 00:34 |
| BGB | 00:59 | 01:19 | 01:38 | 04:19 | 04:39 | 04:59 | | 00:39 | 00:59 | 01:19 | | 05:39 | | 00:39 | 00:59 | 01:19 | | 07:39 | | 21:19 | 21:39 | 21:59 | | 00:39 |
| BSNH | 01:05 | 01:24 | | 04:25 | 04:45 | 05:05 | | 00:45 | 01:05 | 01:25 | | 05:45 | | 00:45 | 01:05 | 01:25 | | 07:45 | | 21:25 | 21:45 | 22:05 | | 00:45 |
| BFOH | 01:18 | | | 04:38 | 04:58 | 05:18 | | 00:58 | 01:18 | 01:38 | | 05:58 | | 00:58 | 01:18 | 01:38 | | 07:58 | | 21:38 | 21:58 | 22:18 | | 00:58 |
| BORB | | | | 04:55 | 05:15 | 05:35 | | 01:15 | 01:35 | 01:55 | | 06:15 | | 01:15 | 01:35 | 01:55 | | 08:15 | | 21:55 | 22:15 | 22:35 | | 01:15 |

| | S1 P (Mo-Fr) | | | | | | | | S1 P (Sa) | | | | | | | | | | S1 P (So) | | | | | | | | | |
|---|---|---|---|---|---|---|---|---|---|---|---|---|---|---|---|---|---|---|---|---|---|---|---|---|---|---|---|---|
| BORB | 00:11 | 00:31 | | | | 04:11 | 20 | 23:51 | 00:11 | 00:31 | 00:51 | NV | 04:11 | | 04:41 | 05:11 | 20 | 23:51 | 00:11 | 00:31 | 00:51 | NV | 06:11 | | 06:41 | 07:11 | 20 | 23:51 |
| BFOH | 00:28 | 00:48 | | | 04:08 | 04:28 | | 00:08 | 00:28 | 00:48 | 01:08 | | 04:28 | | 04:58 | 05:28 | | 00:08 | 00:28 | 00:48 | 01:08 | | 06:28 | | 06:58 | 07:28 | | 00:08 |
| BGB | 00:47 | 01:07 | | 04:07 | 04:27 | 04:47 | | 00:27 | 00:47 | 01:07 | 01:27 | | 04:47 | 05:07 | 05:23 | 05:47 | | 00:27 | 00:47 | 01:07 | 01:27 | | 06:47 | 07:07 | 07:23 | 07:47 | | 00:27 |
| BPOP | 00:59 | 01:19 | 03:59 | 04:19 | 04:39 | 04:59 | | 00:39 | 01:09 | 01:19 | 01:39 | | 04:59 | 05:19 | 05:39 | 05:59 | | 00:39 | 01:09 | 01:19 | 01:39 | | 06:59 | 07:19 | 07:39 | 07:59 | | 00:39 |
| BSGV | 01:12 | 01:28 | 04:08 | 04:28 | 04:48 | 05:08 | | 00:48 | 01:18 | | 01:48 | | 05:08 | 05:28 | 05:48 | 06:08 | | 00:48 | 01:18 | | 01:48 | | 07:08 | 07:28 | 07:48 | 08:08 | | 00:48 |
| BZD | 01:26 | | 04:22 | 04:42 | 05:02 | 05:22 | | 01:02 | 01:32 | | 02:02 | | 05:22 | 05:42 | 06:02 | 06:22 | | 01:02 | 01:32 | | 02:02 | | 07:22 | 07:42 | 08:02 | 08:22 | | 01:02 |
| BWSS | | | 04:31 | 04:51 | 05:11 | 05:31 | | 01:11 | 01:41 | | 02:11 | | 05:31 | 05:51 | 06:11 | 06:31 | | 01:11 | 01:41 | | 02:11 | | 07:31 | 07:51 | 08:11 | 08:31 | | 01:11 |

| | S1 PI (Mo-Fr) | | | | S1 PI (abends,So-Do) | | | | | | S1 PI (abends,Fr-Sa) | | | | | | S1 PI (Sa) | | | | S1 PI (So) | | | |
|---|---|---|---|---|---|---|---|---|---|---|---|---|---|---|---|---|---|---|---|---|---|---|---|---|
| BWSS | | 05:24 | 20 | 21:04 | 21:24 | | | | | | 21:24 | | | | | | | 08:04 | 20 | 21:04 | | 09:44 | 20 | 21:04 |
| BZD | 05:13 | 05:33 | | 21:13 | 21:33 | 21:53 | 22:13 | 20 | 22:53 | 23:13 | 21:33 | 20 | 22:13 | 20 | 22:53 | 23:13 | 07:53 | 08:13 | | 21:13 | 09:33 | 09:53 | | 21:13 |
| BGB | 05:49 | 06:09 | | 21:49 | 22:09 | 22:29 | 22:48 | | 23:28 | 23:48 | 22:09 | | 22:49 | | 23:29 | 23:48 | 08:29 | 08:49 | | 21:49 | 10:09 | 10:29 | | 21:49 |
| BWAI | 06:03 | 06:23 | | 22:03 | 22:23 | 22:43 | | | | | 22:23 | | 23:03 | | 23:43 | | 08:43 | 09:03 | | 22:03 | 10:23 | 10:43 | | 22:03 |
| BFOH | 06:08 | 06:28 | | 22:08 | | | | | | | 22:28 | | 23:08 | | | | 08:48 | 09:08 | | 22:08 | 10:28 | 10:48 | | 22:08 |

| | S1 PI (Mo-Fr) | | | | | | S1 PI (abends, Mo-Do) | | | | | | | | S1 PI (abends,Fr) | | | | | S1 PI (Sa) | | | | | | | | | | | | S1 PI (So) | | | | | | | | | | | | | |
|---|---|---|---|---|---|---|---|---|---|---|---|---|---|---|---|---|---|---|---|---|---|---|---|---|---|---|---|---|---|---|---|---|---|---|---|---|---|---|---|---|---|---|---|---|---|
| BFOH | | | | 05:38 | 20 | 19:58 | 20 | 21:38 | | | | | | | 20 | 22:18 | 22:38 | | | | | | 08:18 | 20 | 19:58 | 20 | 22:18 | 22:38 | | | | | | | 09:58 | 20 | 19:58 | 20 | 21:38 | | | | | | |
| BWAI | | 05:03 | 20 | 05:43 | | 20:03 | | 21:43 | | | | | | | | 22:23 | 22:43 | | | | 07:43 | 20 | 08:23 | | 20:03 | | 22:23 | 22:43 | | | | | 09:23 | 20 | 10:03 | | 20:03 | | 21:43 | | | | | | |
| BGB | | 05:17 | | 05:57 | | 20:17 | | 21:57 | | | 22:57 | 23:17 | 20 | 23:57 | | 22:37 | 22:57 | | 23:57 | | 07:57 | | 08:37 | | 20:17 | | 22:37 | 22:57 | | | 23:57 | | 09:37 | | 10:17 | | 20:17 | | 21:57 | | | 22:57 | 23:17 | 20 | 23:57 |
| BNB | | 05:22 | | 06:02 | | 20:22 | | 22:02 | 20 | 22:42 | 23:02 | 23:22 | | 00:02 | | 22:42 | 23:02 | 20 | 00:02 | | 08:02 | | 08:42 | | 20:22 | | 22:42 | 23:02 | 23:22 | 20 | 00:02 | | 09:42 | | 10:22 | | 20:22 | | 22:02 | 20 | 22:42 | 23:02 | 23:22 | | 00:02 |
| BPOP | 05:09 | 05:29 | | 06:09 | | 20:29 | | 22:09 | | 22:49 | 23:09 | 23:29 | | 00:09 | | 22:49 | 23:09 | | 00:09 | 07:49 | 08:09 | | 08:49 | | 20:29 | | 22:49 | 23:09 | 23:29 | | 00:09 | 09:29 | 09:49 | | 10:29 | | 20:29 | | 22:09 | | 22:49 | 23:09 | 23:29 | | 00:09 |
| BZD | 05:32 | 05:52 | | 06:32 | | 20:52 | | 22:32 | | 23:12 | 23:32 | 23:52 | | | | 23:12 | 23:32 | | | 08:12 | 08:32 | | 09:12 | | 20:52 | | 23:12 | 23:32 | 23:52 | | | 09:52 | 10:12 | | 10:52 | | 20:52 | | 22:32 | | 23:12 | 23:32 | 23:52 | | |
| BWSS | 05:41 | 06:01 | | 06:41 | | 21:01 | | | | 23:21 | 23:41 | 00:01 | | | | 23:21 | 23:41 | | | 08:21 | 08:41 | | 09:21 | | 21:01 | | 23:21 | 23:41 | 00:01 | | | 10:01 | 10:21 | | 11:01 | | 21:01 | | | | 23:21 | 23:41 | 00:01 | | |

| | S2 W (Mo-Fr) | | | | | | | | | | | | | | | S2 W (Fr) | | | | | S2 W (Sa) | | | | | | | | | | | S2 W (So) | | | | | | | | | | | |
|---|---|---|---|---|---|---|---|---|---|---|---|---|---|---|---|---|---|---|---|---|---|---|---|---|---|---|---|---|---|---|---|---|---|---|---|---|---|---|---|---|---|---|---|
| BBFD | 00:05 | 00:25 | | | 04:05 | 05:45 | | | 21:45 | 20 | 22:25 | 22:45 | 23:05 | 23:25 | 23:45 | | | | 23:25 | 23:45 | 00:05 | 00:25 | NV | 04:45 | 20 | 08:25 | | 22:45 | 23:05 | 23:25 | 23:45 | 00:05 | 00:25 | NV | 06:45 | 20 | 10:05 | | 21:45 | 20 | 23:05 | 23:25 | 23:45 |
| BLRD | 00:12 | 00:32 | | | 04:12 | 05:52 | 20 | 21:32 | 21:52 | | 22:32 | 22:52 | 23:12 | 23:32 | 23:52 | 21:52 | 20 | 22:32 | 23:32 | 23:52 | 00:12 | 00:32 | | 04:52 | | 08:32 | 20 | 22:52 | 23:12 | 23:32 | 23:52 | 00:12 | 00:32 | | 06:52 | | 10:12 | 20 | 21:52 | | 23:12 | 23:32 | 23:52 |
| BSKV | 00:26 | 00:46 | | 04:06 | 04:26 | 06:06 | | 21:46 | 22:06 | | 22:46 | 23:06 | 23:26 | 23:46 | 00:06 | 22:06 | | 22:46 | 23:46 | 00:06 | 00:26 | 00:46 | | 05:06 | | 08:46 | | 23:06 | 23:26 | 23:46 | 00:06 | 00:26 | 00:46 | | 07:06 | | 10:26 | | 22:06 | | 23:26 | 23:46 | 00:06 |
| BAHU | 00:32 | 00:52 | | 04:12 | 04:32 | 06:12 | | 21:52 | 22:12 | | 22:52 | 23:12 | 23:32 | 23:52 | 00:12 | 22:12 | | 22:52 | 23:52 | 00:12 | 00:32 | 00:52 | | 05:12 | | 08:52 | | 23:12 | 23:32 | 23:52 | 00:12 | 00:32 | 00:52 | | 07:12 | | 10:32 | | 22:12 | | 23:32 | 23:52 | 00:12 |
| BPOP | 00:34 | 00:54 | | 04:14 | 04:34 | 06:14 | | 21:54 | 22:14 | | 22:54 | 23:14 | 23:34 | 23:54 | 00:14 | 22:14 | | 22:54 | 23:54 | 00:14 | 00:34 | 00:54 | | 05:14 | | 08:54 | | 23:14 | 23:34 | 23:54 | 00:14 | 00:34 | 00:54 | | 07:14 | | 10:34 | | 22:14 | | 23:34 | 23:54 | 00:14 |
| BGB | 00:49 | 01:09 | 04:06 | 04:26 | 04:46 | 06:26 | | 22:06 | 22:26 | | 23:06 | 23:26 | 23:46 | 00:06 | 00:26 | 22:26 | | 23:06 | 00:06 | 00:26 | 00:56 | 01:06 | | 05:26 | | 09:06 | | 23:26 | 23:46 | 00:06 | 00:26 | 00:56 | 01:06 | | 07:26 | | 10:46 | | 22:26 | | 23:46 | 00:06 | 00:26 |
| BBU | 01:06 | 01:25 | 04:25 | 04:45 | 05:05 | 06:45 | | 22:25 | 22:45 | | 23:25 | 23:45 | 00:05 | 00:25 | 00:45 | 22:45 | | 23:25 | 00:25 | 00:49 | 01:15 | | | 05:45 | | 09:25 | | 23:45 | 00:05 | 00:25 | 00:49 | 01:15 | | | 07:45 | | 11:05 | | 22:45 | | 00:05 | 00:25 | 00:45 |
| BBER | 01:16 | | 04:40 | 05:00 | 05:20 | 07:00 | | 22:40 | 23:00 | | 23:40 | 00:00 | 00:20 | 00:40 | 01:00 | 23:00 | | 23:40 | 00:35 | 00:59 | 01:25 | | | 06:00 | | 09:40 | | 00:00 | 00:20 | 00:35 | 00:59 | 01:25 | | | 08:00 | | 11:20 | | 23:00 | | 00:20 | 00:40 | 01:00 |

| | S2 W (Mo-Fr) | | | | | | | | | | | | | | | | S2 W (Fr) | | | | | S2 W (Sa) | | | | | | | | | | | | | | | | | | | | | | |
|---|---|---|---|---|---|---|---|---|---|---|---|---|---|---|---|---|---|---|---|---|---|---|---|---|---|---|---|---|---|---|---|---|---|---|---|---|---|---|---|---|---|---|---|---|
| BBER | 00:08 | 00:28 | 00:48 | | 04:08 | 04:28 | 20 | 20:08 | 20:28 | 20:48 | 20 | 21:28 | 21:48 | 20 | 23:28 | 23:48 | 20:28 | 20 | 21:08 | 21:28 | 23:48 | 00:08 | 00:36 | NV | 03:33 | 04:03 | | 04:33 | 05:03 | 05:28 | 20 | 07:08 | 20 | 19:28 | 19:48 | 20:08 | 20:28 | 20:48 | 21:08 | 21:28 | 21:48 | 20 | 23:28 | 23:48 |
| BGB | 00:40 | 01:00 | 01:20 | | 04:40 | 05:00 | | 20:40 | 21:00 | 21:20 | | 22:00 | 22:20 | | 00:00 | 00:20 | 21:00 | | 21:40 | 22:00 | 00:20 | 00:40 | 01:04 | | 04:07 | 04:40 | 05:00 | 05:17 | 05:40 | 06:00 | | 07:40 | | 20:00 | 20:20 | 20:40 | 21:00 | 21:20 | 21:40 | 22:00 | 22:20 | | 00:00 | 00:20 |
| BNB | 00:44 | 01:04 | 01:24 | | 04:44 | 05:04 | | 20:44 | 21:04 | 21:24 | | 22:04 | 22:24 | | 00:04 | 00:24 | 21:04 | | 21:44 | 22:04 | 00:24 | 00:44 | 01:09 | | 04:12 | 04:44 | 05:04 | 05:22 | 05:44 | 06:04 | | 07:44 | | 20:04 | 20:24 | 20:44 | 21:04 | 21:24 | 21:44 | 22:04 | 22:24 | | 00:04 | 00:24 |
| BPOP | 00:52 | 01:12 | 01:31 | 04:32 | 04:52 | 05:12 | | 20:52 | 21:12 | 21:32 | | 22:12 | 22:32 | | 00:12 | 00:32 | 21:12 | | 21:52 | 22:12 | 00:32 | 00:54 | 01:24 | | 04:22 | 04:52 | 05:12 | 05:32 | 05:52 | 06:12 | | 07:52 | | 20:12 | 20:32 | 20:52 | 21:12 | 21:32 | 21:52 | 22:12 | 22:32 | | 00:12 | 00:32 |
| BSKV | 00:59 | 01:19 | | 04:39 | 04:59 | 05:19 | | 20:59 | 21:19 | 21:39 | | 22:19 | 22:39 | | 00:19 | 00:39 | 21:19 | | 21:59 | 22:19 | 00:39 | 01:02 | 01:32 | | 04:29 | 04:59 | 05:19 | 05:39 | 05:59 | 06:19 | | 07:59 | | 20:19 | 20:39 | 20:59 | 21:19 | 21:39 | 21:59 | 22:19 | 22:39 | | 00:19 | 00:39 |
| BLRD | 01:15 | | | 04:55 | 05:15 | 05:35 | | 21:15 | 21:34 | 21:55 | | 22:35 | 22:55 | | 00:35 | 00:55 | 21:35 | | 22:15 | 22:34 | 00:57 | 01:16 | 01:46 | | 04:44 | 05:15 | 05:35 | 05:55 | 06:15 | 06:35 | | 08:15 | | 20:35 | 20:55 | 21:15 | 21:35 | 21:55 | 22:15 | 22:34 | 22:55 | | 00:35 | 00:57 |
| BBFD | 01:21 | | | 05:01 | 05:21 | 05:41 | | | 21:41 | 22:01 | | 22:41 | 23:01 | | 00:41 | 01:01 | | | | 22:41 | 01:03 | 01:23 | 01:53 | | 04:51 | 05:21 | 05:41 | 06:01 | 06:21 | 06:41 | | 08:21 | | | | | | | | 22:41 | 23:01 | | 00:41 | 01:03 |

| | S2 W (So) | | | | | | | | | | | | | | | | | |
|---|---|---|---|---|---|---|---|---|---|---|---|---|---|---|---|---|---|---|
| BBER | 00:08 | 00:36 | NV | 05:33 | 06:03 | | 06:33 | 07:03 | 07:28 | 20 | 08:48 | 20 | 20:08 | 20:28 | 20:48 | 20 | 23:28 | 23:48 |
| BGB | 00:40 | 01:04 | | 06:07 | 06:40 | 07:00 | 07:17 | 07:40 | 08:00 | | 09:20 | | 20:40 | 21:00 | 21:20 | | 00:00 | 00:20 |
| BNB | 00:44 | 01:09 | | 06:12 | 06:44 | 07:04 | 07:22 | 07:44 | 08:04 | | 09:24 | | 20:44 | 21:04 | 21:24 | | 00:04 | 00:24 |
| BLRD | 01:16 | 01:46 | | 06:44 | 07:15 | 07:35 | 07:55 | 08:15 | 08:35 | | 09:55 | | 21:15 | 21:34 | 21:55 | | 00:35 | 00:55 |
| BBFD | 01:23 | 01:53 | | 06:51 | 07:21 | 07:41 | 08:01 | 08:21 | 08:41 | | 10:01 | | | 21:41 | 22:01 | | 00:41 | 01:01 |

| | S2 WI (Mo-Fr) | | | | | | | | | S2 WI (Fr) | | | | | S2 WI (Sa) | | | | | | | | S2 WI (So) | | | | | | |
|---|---|---|---|---|---|---|---|---|---|---|---|---|---|---|---|---|---|---|---|---|---|---|---|---|---|---|---|---|---|
| BBFD | | | | | 05:55 | 20 | 20:55 | 21:15 | 21:35 | 21:15 | 20 | 21:55 | 22:15 | 22:35 | | | | 08:35 | 20 | 21:55 | 22:15 | 22:35 | | | 10:15 | 20 | 20:55 | 21:15 | 21:35 |
| BLRD | | | 05:02 | 20 | 06:02 | | 21:02 | 21:22 | 21:42 | 21:22 | | 22:02 | 22:22 | 22:42 | | 07:42 | 20 | 08:42 | | 22:02 | 22:22 | 22:42 | 09:22 | 20 | 10:22 | | 21:02 | 21:22 | 21:42 |
| BSKV | | | 05:16 | | 06:16 | | 21:16 | 21:36 | 21:56 | 21:36 | | 22:16 | 22:36 | 22:56 | | 07:56 | | 08:56 | | 22:16 | 22:36 | 22:56 | 09:36 | | 10:36 | | 21:16 | 21:36 | 21:56 |
| BAHU | | 05:02 | 05:22 | | 06:22 | | 21:22 | 21:42 | | 21:42 | | 22:22 | 22:42 | | 07:42 | 08:02 | | 09:02 | | 22:22 | 22:42 | | 09:42 | | 10:42 | | 21:22 | 21:42 | |
| BPOP | 04:44 | 05:04 | 05:24 | | 06:24 | | 21:24 | 21:44 | | 21:44 | | 22:24 | 22:44 | | 07:44 | 08:04 | | 09:04 | | 22:24 | 22:44 | | 09:44 | | 10:44 | | 21:24 | 21:44 | |
| BBLB | 05:06 | 05:26 | 05:46 | | 06:46 | | 21:46 | 22:05 | | 22:06 | | 22:46 | 23:05 | | 08:06 | 08:26 | | 09:26 | | 22:46 | 23:05 | | 10:06 | | 11:06 | | 21:46 | 22:05 | |
| BBU | 05:14 | 05:34 | 05:54 | | 06:54 | | 21:54 | | | 22:14 | | 22:54 | | | 08:14 | 08:34 | | 09:34 | | 22:54 | | | 10:14 | | 11:14 | | 21:54 | | |

| | S2 WI (Mo-Fr) | | | | | | | | | | S2 WI (Fr) | | | | | | | S2 WI (Sa) | | | | | | | | | S2 WI (So) | | | | | | | | |
|---|---|---|---|---|---|---|---|---|---|---|---|---|---|---|---|---|---|---|---|---|---|---|---|---|---|---|---|---|---|---|---|---|---|---|---|
| BBU | 04:31 | | 05:11 | 20 | 20:31 | 20:51 | 20 | 21:31 | 21:51 | | 20:51 | 20 | 21:31 | 20 | 22:31 | 22:51 | | | | 08:11 | 20 | 21:31 | 20 | 22:31 | 22:51 | | | | | 10:11 | 20 | 20:31 | 21:31 | 21:51 | |
| BBLB | 04:40 | | 05:20 | | 20:40 | 21:00 | | 21:40 | 22:00 | 22:20 | 21:00 | | 21:40 | | 22:40 | 23:00 | 23:20 | | | 08:20 | | 21:40 | | 22:40 | 23:00 | 23:20 | | | | 10:20 | | 20:40 | 21:40 | 22:00 | 22:20 |
| BGB | 04:50 | | 05:30 | | 20:50 | 21:10 | | 21:50 | 22:10 | 22:30 | 21:10 | | 21:50 | | 22:50 | 23:10 | 23:30 | | 08:10 | 08:30 | | 21:50 | | 22:50 | 23:10 | 23:30 | | 09:50 | 20 | 10:30 | | 20:50 | 21:50 | 22:10 | 22:30 |
| BNB | 04:54 | | 05:34 | | 20:54 | 21:14 | | 21:54 | 22:14 | 22:34 | 21:14 | | 21:54 | | 22:54 | 23:14 | 23:34 | | 08:14 | 08:34 | | 21:54 | | 22:54 | 23:14 | 23:34 | | 09:54 | | 10:34 | | 20:54 | 21:54 | 22:14 | 22:34 |
| BPOP | 05:01 | | 05:42 | | 21:02 | 21:22 | | 22:02 | | | 21:22 | | 22:02 | | 23:02 | | | | 08:22 | 08:42 | | 22:02 | | 23:02 | | | | 10:02 | | 10:42 | | 21:02 | 22:02 | | |
| BSKV | | 05:29 | 05:49 | | 21:09 | 21:29 | | 22:09 | | | 21:29 | | 22:09 | | 23:09 | | | 08:09 | 08:29 | 08:49 | | 22:09 | | 23:09 | | | 09:49 | 10:09 | | 10:49 | | 21:09 | 22:09 | | |
| BLRD | | 05:44 | 06:05 | | 21:25 | 21:45 | | 22:25 | | | 21:45 | | 22:25 | | 23:25 | | | 08:24 | 08:45 | 09:05 | | 22:25 | | 23:25 | | | 10:04 | 10:25 | | 11:05 | | 21:25 | 22:25 | | |
| BBFD | | 05:51 | 06:11 | | 21:31 | | | | | | 21:51 | | 22:31 | | | | | 08:31 | 08:51 | 09:11 | | 22:31 | | | | | 10:11 | 10:31 | | 11:11 | | 21:31 | | | |

| | S25 V (Mo-Fr) | | | | | | | | S25 V (Sa) | | | | | | | S25 V (So) | | | | | | | |
|---|---|---|---|---|---|---|---|---|---|---|---|---|---|---|---|---|---|---|---|---|---|---|---|
| BTLS | 00:05 | 00:25 | 00:45 | | | 04:05 | 20 | 23:45 | 00:05 | 00:25 | 00:44 | NV | 04:45 | 20 | 23:45 | 00:05 | 00:25 | 00:44 | NV | | 06:25 | 20 | 23:45 |
| BAHU | 00:27 | 00:47 | 01:07 | | 04:07 | 04:27 | | 00:07 | 00:27 | 00:47 | 01:07 | | 05:07 | | 00:07 | 00:27 | 00:47 | 01:07 | | | 06:47 | | 00:07 |
| BPOP | 00:29 | 00:49 | 01:09 | | 04:09 | 04:29 | | 00:09 | 00:29 | 00:49 | 01:09 | | 05:09 | | 00:09 | 00:29 | 00:49 | 01:09 | | 06:39 | 06:49 | | 00:09 |
| BNB | 00:37 | 00:57 | 01:17 | | 04:17 | 04:37 | | 00:17 | 00:37 | 00:57 | | | 05:17 | | 00:17 | 00:37 | 00:57 | | | 06:47 | 06:57 | | 00:17 |
| BSNH | 00:48 | 01:08 | | | 04:28 | 04:48 | | 00:28 | 00:48 | 01:08 | | | 05:28 | | 00:28 | 00:48 | 01:08 | | | 07:01 | 07:08 | | 00:28 |
| BTG | 00:58 | 01:17 | | | 04:38 | 04:58 | | 00:38 | 00:58 | 01:18 | | | 05:38 | | 00:38 | 00:58 | 01:18 | | | | 07:18 | | 00:38 |
| BHLS | 01:04 | | | 04:34 | 04:44 | 05:04 | | 00:44 | 01:04 | 01:24 | | | 05:44 | | 00:44 | 01:04 | 01:24 | | | | 07:24 | | 00:44 |
| BHD | 01:07 | | | 04:37 | 04:47 | 05:07 | | 00:47 | 01:07 | 01:27 | | | 05:47 | | 00:47 | 01:07 | 01:27 | | | | 07:27 | | 00:47 |

| | S25 V (Mo-Fr) | | | | | | | | | S25 V (Sa) | | | | | | | | | S25 V (So) | | | | | | | |
|---|---|---|---|---|---|---|---|---|---|---|---|---|---|---|---|---|---|---|---|---|---|---|---|---|---|---|
| BHD | 00:08 | 00:28 | 00:38 | | | | 04:08 | 20 | 23:48 | 00:08 | 20 | 00:48 | NV | | 05:08 | 20 | 23:28 | 23:48 | 00:08 | 20 | 00:48 | NV | | 07:08 | 20 | 23:48 |
| BHLS | 00:11 | 00:31 | 00:41 | | | | 04:11 | | 23:51 | 00:11 | | 00:51 | | | 05:11 | | 23:31 | 23:51 | 00:11 | | 00:51 | | | 07:11 | | 23:51 |
| BTG | 00:18 | 00:38 | | | | 04:08 | 04:18 | | 23:58 | 00:18 | | 00:58 | | | 05:18 | | 23:38 | 23:58 | 00:18 | | 00:58 | | | 07:18 | | 23:58 |
| BSNH | 00:28 | 00:48 | | | | 04:18 | 04:28 | | 00:08 | 00:28 | | 01:08 | | | 05:28 | | 23:48 | 00:08 | 00:28 | | 01:08 | | 07:08 | 07:28 | | 00:08 |
| BNB | 00:39 | 00:59 | | | 04:19 | 04:29 | 04:39 | | 00:19 | 00:39 | | 01:19 | | | 05:39 | | 23:59 | 00:19 | 00:39 | | 01:19 | | 07:19 | 07:39 | | 00:19 |
| BPOP | 00:47 | 01:07 | | | 04:27 | 04:36 | 04:47 | | 00:27 | 00:47 | | 01:27 | | 05:27 | 05:47 | | 00:07 | 00:27 | 00:47 | | 01:27 | | 07:27 | 07:47 | | 00:27 |
| BLIS | 01:08 | 01:27 | | 04:37 | 04:48 | | 05:08 | | 00:48 | 01:08 | | 01:48 | | 05:48 | 06:08 | | 00:28 | 00:47 | 01:08 | | 01:48 | | 07:48 | 08:08 | | 00:48 |
| BTLS | 01:11 | | | 04:41 | 04:51 | | 05:11 | | 00:51 | 01:11 | | 01:51 | | 05:51 | 06:11 | | 00:31 | 00:51 | 01:11 | | 01:51 | | 07:51 | 08:11 | | 00:51 |

| | S26 VI (Mo-Fr) | | | | | | | | | | S26 VI (Sa) | | | | | | S26 VI (So) | | | | |
|---|---|---|---|---|---|---|---|---|---|---|---|---|---|---|---|---|---|---|---|---|---|
| BTLS | | | 05:35 | 20 | 19:35 | 19:55 | 20 | 20:35 | 20 | 21:15 | 08:15 | 20 | 19:35 | 19:55 | 20 | 20:35 | 11:15 | 20 | 19:55 | 20 | 20:35 |
| BLIS | | 05:18 | 05:38 | | 19:38 | 19:58 | | 20:38 | | 21:18 | 08:18 | | 19:38 | 19:58 | | 20:38 | 11:18 | | 19:58 | | 20:38 |
| BPOP | | 05:39 | 05:59 | | 19:59 | 20:19 | | 20:59 | | | 08:39 | | 19:59 | 20:19 | | | 11:39 | | 20:19 | | |
| BNB | 05:27 | 05:47 | 06:07 | | 20:07 | 20:27 | | | | | | | 20:07 | 20:27 | | | | | | | |
| BWAI | 05:46 | 06:06 | 06:26 | | 20:26 | | | | | | | | | | | | | | | | |

| | S26 VI (Mo-Fr) | | | | | | | S26 VI (Sa) | | | | | | S26 VI (So) | | | | | |
|---|---|---|---|---|---|---|---|---|---|---|---|---|---|---|---|---|---|---|---|
| BWAI | | | | 05:50 | 20 | 20:10 | 20:30 | | | | | | | | | | | | |
| BNB | | 05:09 | 20 | 06:09 | | 20:29 | 20:49 | | | 08:09 | 08:29 | | | | | 11:09 | 11:29 | | |
| BPOP | | 05:17 | | 06:17 | | 20:37 | | | | 08:17 | 08:37 | 20 | 19:57 | | | 11:17 | 11:37 | 20 | 19:57 |
| BLIS | 05:18 | 05:38 | | 06:38 | | 20:58 | | 07:58 | 20 | 08:38 | 08:58 | | 20:18 | 10:58 | 20 | 11:38 | 11:58 | | 20:18 |
| BTLS | 05:21 | 05:41 | | 06:41 | | 21:01 | | 08:01 | | 08:41 | 09:01 | | 20:21 | 11:01 | | 11:41 | 12:01 | | 20:21 |

| | S3 B (Mo-Fr) | | | | | | | (abends) | | | S3 B (Sa) | | | | | | | | S3 B (So) | | | | | | | |
|---|---|---|---|---|---|---|---|---|---|---|---|---|---|---|---|---|---|---|---|---|---|---|---|---|---|---|
| BE | 00:05 | 00:25 | | 03:45 | 04:05 | 20 | 22:45 | 23:05 | 23:25 | 23:45 | 00:05 | 00:25 | NV | 04:25 | 20 | 06:05 | 20 | 22:45 | 00:05 | 00:25 | NV | 06:25 | 20 | 08:05 | 20 | 22:45 |
| BKPK | 00:20 | 00:40 | 03:40 | 04:00 | 04:20 | | 23:00 | 23:20 | 23:40 | 00:00 | 00:20 | 00:40 | | 04:40 | | 06:20 | | 23:00 | 00:20 | 00:40 | | 06:40 | | 08:20 | | 23:00 |
| BOSB | 00:39 | 00:57 | 03:59 | 04:19 | 04:39 | | 23:19 | 23:39 | 23:59 | 00:19 | 00:39 | 00:57 | | 04:59 | | 06:39 | | 23:19 | 00:39 | 00:57 | | 06:59 | | 08:39 | | 23:19 |
| BCHS | 01:00 | | 04:20 | 04:40 | 05:00 | | 23:40 | 00:00 | 00:20 | 00:40 | 01:00 | | | 05:20 | | 07:00 | | 23:40 | 01:00 | | | 07:20 | | 09:00 | | 23:40 |
| BWKS | 01:03 | | 04:23 | 04:43 | 05:03 | | 23:43 | 00:02 | 00:23 | 00:43 | 01:03 | | | | | 07:03 | | 23:43 | 01:03 | | | | | 09:03 | | 23:43 |
| BSPA | \| | | \| | \| | 05:17 | | 23:57 | | \| | \| | \| | | | | | 07:17 | | 23:57 | \| | | | | | 09:17 | | 23:57 |
| BGWD | 01:05 | | 04:25 | 04:45 | | | | | 00:25 | 00:45 | 01:05 | | | | | | | | 01:05 | | | | | | | |

### S3 B (Mo-Fr)

| | | | | | | | | | |
|---|---|---|---|---|---|---|---|---|---|
| BGWD | | 00:39 | | 03:59 | 20 | 04:59 | | | |
| BSPA | | \| | | \| | | \| | 05:08 | 20 | 23:48 |
| BWKS | 00:22 | 00:42 | | 04:02 | | 05:02 | 05:22 | | 00:02 |
| BCHS | 00:24 | 00:44 | | 04:04 | | 05:04 | 05:24 | | 00:04 |
| BOSB | 00:47 | 01:07 | 04:07 | 04:27 | | 05:27 | 05:47 | | 00:27 |
| BKPK | 01:05 | 01:24 | 04:25 | 04:45 | | 05:45 | 06:05 | | 00:45 |
| BE | 01:20 | | 04:40 | 05:00 | | 06:00 | 06:20 | | 01:00 |

### S3 B (Sa)

| | | | | | | | | | |
|---|---|---|---|---|---|---|---|---|---|
| BGWD | | 00:39 | | 04:59 | 05:19 | | | | |
| BSPA | | \| | | \| | \| | | 07:08 | 20 | 23:48 |
| BWKS | 00:22 | 00:42 | | 05:02 | 05:22 | | 07:22 | | 00:02 |
| BCHS | 00:24 | 00:44 | | 05:04 | 05:24 | 20 | 07:24 | | 00:04 |
| BOSB | 00:47 | 01:07 | NV | 05:27 | 05:47 | | 07:47 | | 00:27 |
| BKPK | 01:05 | 01:25 | | 05:45 | 06:05 | | 08:05 | | 00:45 |
| BE | 01:20 | 01:40 | | 06:00 | 06:20 | | 08:20 | | 01:00 |

### S3 B (So)

| | | | | | | | | | |
|---|---|---|---|---|---|---|---|---|---|
| BGWD | | 00:39 | | 06:59 | 07:19 | | | | |
| BSPA | | \| | | \| | \| | | 09:08 | 20 | 23:48 |
| BWKS | 00:22 | 00:42 | | 07:02 | 07:22 | | 09:22 | | 00:02 |
| BCHS | 00:24 | 00:44 | | 07:04 | 07:24 | 20 | 09:24 | | 00:04 |
| BOSB | 00:47 | 01:07 | NV | 07:27 | 07:47 | | 09:47 | | 00:27 |
| BKPK | 01:05 | 01:25 | | 07:45 | 08:05 | | 10:05 | | 00:45 |
| BE | 01:20 | 01:40 | | 08:00 | 08:20 | | 10:20 | | 01:00 |

### S3 BI (Mo-Fr)

| | | | | | | | | | | |
|---|---|---|---|---|---|---|---|---|---|---|
| BE | 04:35 | 20 | 08:35 | | 14:15 | 20 | 20:15 | | | 23:35 |
| BFRH | 04:46 | | 08:46 | 20 | 14:26 | | 20:26 | 20 | 23:26 | 23:46 |
| BOSB | 05:07 | | 09:07 | | 14:47 | | 20:47 | | 23:47 | 00:07 |

### S3 BI (Sa)

| | | | | | |
|---|---|---|---|---|---|
| BE | 06:35 | 20 | 07:35 | | |
| BFRH | 06:46 | | 07:46 | 20 | 23:26 |
| BOSB | 07:07 | | 08:07 | | 23:47 |

### S3 BI (So)

| | | | | | | |
|---|---|---|---|---|---|---|
| BE | 08:35 | 20 | 09:35 | | | 23:35 |
| BFRH | 08:46 | | 09:46 | 20 | 23:26 | 23:46 |
| BOSB | 09:07 | | 10:07 | | 23:47 | 00:07 |

### S3 BI (Mo-Fr)

| | | | | | | | | | | | |
|---|---|---|---|---|---|---|---|---|---|---|---|
| BOSB | 04:57 | 20 | 07:57 | 20 | 13:37 | 20 | 19:37 | 20 | 22:57 | 20 | 23:57 |
| BFRH | 05:19 | | 08:19 | | 13:59 | | 19:59 | | 23:19 | | 00:19 |
| BE | 05:30 | | 08:30 | | 14:10 | | 20:10 | | 23:30 | | 00:30 |

### S3 BI (Sa)

| | | | | | |
|---|---|---|---|---|---|
| BOSB | 07:17 | 20 | 22:57 | 20 | 23:57 |
| BFRH | 07:39 | | 23:19 | | 00:19 |
| BE | | | 23:30 | | 00:30 |

### S3 BI (So)

| | | | | | |
|---|---|---|---|---|---|
| BOSB | 09:17 | 20 | 22:57 | 20 | 23:57 |
| BFRH | 09:39 | | 23:19 | | 00:19 |
| BE | | | 23:30 | | 00:30 |

### S41 A (Mo-Fr)

| | | | | | | | | | | | | | | | | | | |
|---|---|---|---|---|---|---|---|---|---|---|---|---|---|---|---|---|---|---|
| BSKR | 00:06 | 00:16 | 00:26 | | 00:36 | 00:46 | 00:56 | 01:08 | 01:16 | | | | | | | 04:16 | 10 | 23:56 |
| BBUP | 00:11 | 00:21 | 00:31 | | 00:41 | 00:51 | 01:01 | 01:13 | 01:21 | | | | | | 04:11 | 04:21 | | 00:01 |
| BWES | 00:22 | 00:32 | 00:42 | | 00:52 | 01:03 | 01:12 | 01:24 | | | | | 04:02 | 10 | 04:22 | 04:32 | | 00:12 |
| BGB | 00:35 | 00:45 | 00:55 | | 01:05 | 01:16 | | 01:37 | | | 03:55 | 10 | 04:15 | | 04:35 | 04:45 | | 00:25 |
| BGSS | 00:42 | 00:52 | 01:02 | | 01:12 | 01:22 | | | | 03:52 | 04:02 | | 04:22 | | 04:42 | 04:52 | | 00:32 |
| BOK | 00:51 | 01:01 | 01:10 | 01:15 | 01:20 | | | | | 04:01 | 04:11 | | 04:31 | | 04:51 | 05:01 | | 00:41 |
| BSKR | 01:08 | 01:15 | | 01:27 | | | | | | 04:15 | 04:25 | | 04:45 | | 05:05 | 05:15 | | 00:55 |

### S41 A (Sa)

| | | | | | | |
|---|---|---|---|---|---|---|
| BSKR | 00:06 | 00:16 | NV | 05:16 | 10 | 23:56 |
| BBUP | 00:11 | 00:21 | | 05:21 | | 00:01 |
| BWES | 00:22 | 00:32 | | 05:32 | | 00:12 |
| BGB | 00:35 | 00:45 | | 05:45 | | 00:25 |
| BGSS | 00:42 | 00:52 | | 05:52 | | 00:32 |
| BOK | 00:51 | 01:01 | | 06:01 | | 00:41 |
| BSKR | 01:05 | 01:15 | | 06:15 | | 00:55 |

### S41 A (So)

| | | | | | | |
|---|---|---|---|---|---|---|
| BSKR | 00:06 | 00:16 | NV | 06:06 | 10 | 23:56 |
| BBUP | 00:11 | 00:21 | | 06:11 | | 00:01 |
| BWES | 00:22 | 00:32 | | 06:22 | | 00:12 |
| BGB | 00:35 | 00:45 | | 06:35 | | 00:25 |
| BGSS | 00:42 | 00:52 | | 06:42 | | 00:32 |
| BOK | 00:51 | 01:01 | | 06:51 | | 00:41 |
| BSKR | 01:05 | 01:15 | | 07:05 | | 00:55 |

### S42 R (Mo-Fr)

| | | | | | | | | | | | | | | | | | |
|---|---|---|---|---|---|---|---|---|---|---|---|---|---|---|---|---|---|
| BSKR | 00:00 | 10 | 00:20 | 00:30 | 10 | 00:50 | 01:00 | 01:10 | 01:20 | | | | | | 04:00 | 10 | 23:50 |
| BHER | 00:07 | | 00:27 | 00:37 | | 00:57 | 01:07 | 01:17 | 01:26 | | | | | 03:57 | 04:07 | | 23:57 |
| BOK | 00:16 | | 00:36 | 00:46 | | 01:06 | 01:16 | 01:26 | | | | | 03:56 | 04:06 | 04:16 | | 00:06 |
| BGSS | 00:24 | | 00:44 | 00:54 | | 01:14 | 01:24 | 01:34 | | | | 03:54 | 04:04 | 04:14 | 04:24 | | 00:14 |
| BGB | 00:31 | | 00:51 | 01:01 | | 01:21 | 01:30 | | | | | 04:01 | 04:11 | 04:21 | 04:31 | | 00:21 |
| BWES | 00:43 | | 01:03 | 01:13 | | 01:33 | | | | | 04:03 | 04:13 | 04:23 | 04:33 | 04:43 | | 00:33 |
| BHAL | 00:49 | | 01:09 | 01:19 | | | | | | 03:58 | 04:09 | 04:19 | 04:29 | 04:39 | 04:49 | | 00:39 |
| BBUP | 00:55 | | 01:15 | 01:24 | | | | | | 04:05 | 04:15 | 04:25 | 04:35 | 04:45 | 04:55 | | 00:45 |
| BSKR | 01:00 | | 01:20 | | | | | | | 04:10 | 04:20 | 04:30 | 04:40 | 04:50 | 05:00 | | 00:50 |

### S42 R (Sa)

| | | | | | | |
|---|---|---|---|---|---|---|
| BSKR | 00:00 | 00:10 | NV | 05:10 | 10 | 23:50 |
| BHER | 00:07 | 00:17 | | 05:17 | | 23:57 |
| BOK | 00:16 | 00:26 | | 05:26 | | 00:06 |
| BGSS | 00:24 | 00:34 | | 05:34 | | 00:14 |
| BGB | 00:31 | 00:41 | | 05:41 | | 00:21 |
| BWES | 00:43 | 00:53 | | 05:53 | | 00:33 |
| BHAL | 00:49 | 00:59 | | 05:59 | | 00:39 |
| BBUP | 00:55 | 01:05 | | 06:05 | | 00:45 |
| BSKR | 01:00 | 01:10 | | 06:10 | | 00:50 |

### S42 R (So)

| | | | | | | |
|---|---|---|---|---|---|---|
| BSKR | 00:00 | 00:10 | NV | 06:40 | 10 | 23:50 |
| BHER | 00:07 | 00:17 | | 06:47 | | 23:57 |
| BOK | 00:16 | 00:26 | | 06:56 | | 00:06 |
| BGSS | 00:24 | 00:34 | | 07:04 | | 00:14 |
| BGB | 00:31 | 00:41 | | 07:11 | | 00:21 |
| BWES | 00:43 | 00:53 | | 07:23 | | 00:33 |
| BHAL | 00:49 | 00:59 | | 07:29 | | 00:39 |
| BBUP | 00:55 | 01:05 | | 07:35 | | 00:45 |
| BSKR | 01:00 | 01:10 | | 07:40 | | 00:55 |

### S41 AI (Mo-Fr)

| | | | | | | | | | | | | | | | | | | | | | |
|---|---|---|---|---|---|---|---|---|---|---|---|---|---|---|---|---|---|---|---|---|---|
| BSKR | | | | 05:21 | 10 | 09:41 | 10 | 10:11 | 10:21 | 10 | 10:41 | | | 13:31 | 10 | 19:41 | 10 | 20:01 | 10 | 20:21 | 20:31 | 20:41 | 21:01 |
| BBUP | | 05:06 | 10 | 05:26 | | 09:46 | | 10:16 | 10:26 | | 10:46 | | 13:26 | 13:36 | | 19:46 | | 20:06 | | 20:26 | 20:36 | 20:46 | 21:06 |
| BWES | 05:07 | 05:17 | | 05:37 | | 09:57 | | 10:27 | 10:37 | | 10:57 | 13:27 | 13:37 | 13:47 | | 19:57 | | 20:17 | | 20:37 | 20:47 | 20:57 | 21:17 |
| BGB | 05:20 | 05:30 | | 05:50 | | 10:10 | | 10:40 | 10:50 | | 11:10 | 13:40 | 13:50 | 14:00 | | 20:10 | | 20:30 | | 20:50 | 21:00 | | |
| BGSS | 05:27 | 05:37 | | 05:57 | | 10:17 | | 10:47 | | | | 13:47 | 13:57 | 14:07 | | 20:17 | | 20:37 | | 20:57 | 21:06 | | |
| BHER | 05:44 | 05:54 | | 06:14 | | 10:34 | | 11:04 | | | | 14:04 | 14:14 | 14:24 | | 20:34 | | 20:54 | | 21:14 | | | |
| BTHF | 05:48 | 05:58 | | 06:18 | | 10:38 | | | | | | 14:08 | 14:18 | 14:28 | | 20:38 | | 20:58 | | 21:18 | | | |
| BSKR | 05:50 | 06:00 | | 06:20 | | 10:40 | | | | | | 14:10 | 14:20 | 14:30 | | 20:40 | | 21:00 | | | | | |

### S42 RI (Mo-Fr)

| | | | | | | | | | | | | | | | | | | | |
|---|---|---|---|---|---|---|---|---|---|---|---|---|---|---|---|---|---|---|---|
| BSKR | | | | | | 05:45 | | 06:05 | 10 | 10:15 | 10:25 | | | | | 14:25 | 10 | 20:15 | 10 | 20:35 |
| BTHF | | | | 05:28 | 10 | 05:48 | 10 | 06:08 | | 10:18 | 10:28 | | | 13:48 | 10 | 14:28 | | 20:18 | | 20:38 |
| BHER | | | 05:22 | 05:32 | | 05:52 | | 06:12 | | 10:22 | 10:32 | | | 13:52 | | 14:32 | | 20:22 | | 20:42 |
| BGSS | | 05:29 | 05:39 | 05:49 | | 06:09 | | 06:29 | | 10:39 | 10:49 | | 13:59 | 14:09 | | 14:49 | | 20:39 | | 20:59 |
| BGB | | 05:36 | 05:46 | 05:56 | | 06:16 | | 06:36 | | 10:46 | 10:56 | 13:56 | 14:06 | 14:16 | | 14:56 | | 20:46 | | 21:06 |
| BWES | 05:28 | 05:48 | 05:58 | 06:08 | | 06:28 | | 06:48 | | 10:58 | 11:08 | 14:08 | 14:18 | 14:28 | | 15:08 | | 20:58 | | 21:18 |
| BBUP | 05:40 | 06:00 | 06:10 | 06:20 | | 06:40 | | 07:00 | | 11:10 | 11:19 | 14:20 | 14:30 | 14:40 | | 15:20 | | 21:10 | | 21:30 |
| BSKR | 05:45 | 06:05 | 06:15 | 06:25 | | 06:45 | | 07:05 | | 11:15 | | 14:25 | 14:35 | 14:45 | | 15:25 | | 21:15 | | |

### S45 U (Mo-Fr)

| | | | | | | |
|---|---|---|---|---|---|---|
| BGAS | | | 04:51 | | | |
| BFLH | | | \| | 05:05 | 20 | 23:45 |
| BSW | 04:22 | 04:42 | 05:00 | 05:20 | | 00:00 |
| BTHF | 04:36 | 04:56 | 05:16 | 05:36 | | 00:16 |
| BSKR | 04:38 | 04:58 | 05:18 | 05:38 | | 00:18 |

### S45 U (Sa)

| | | | | | | | |
|---|---|---|---|---|---|---|---|
| BGAS | | | 04:51 | | | | |
| BFLH | | | \| | 05:05 | 05:25 | 20 | 23:45 |
| BSW | 04:31 | 04:52 | 05:00 | 05:20 | 05:40 | | 00:00 |
| BTHF | 04:45 | 05:05 | 05:15 | 05:35 | 05:56 | | 00:16 |
| BSKR | | | | | 05:58 | | 00:18 |

### S45 U (So)

| | | | | | | |
|---|---|---|---|---|---|---|
| BGAS | 06:21 | | | | | |
| BFLH | \| | | | 07:05 | 20 | 23:45 |
| BSW | 06:30 | 06:52 | 07:02 | 07:20 | | 00:00 |
| BTHF | 06:46 | 07:06 | 07:16 | 07:36 | | 00:16 |
| BSKR | | | 07:18 | 07:38 | | 00:18 |

### S45 U (Mo-Fr)

| | | | | | | | | |
|---|---|---|---|---|---|---|---|---|
| BSKR | 00:08 | 00:28 | | 04:48 | 20 | 23:08 | 23:28 | 23:48 |
| BTHF | 00:10 | 00:30 | | 04:50 | | 23:10 | 23:30 | 23:50 |
| BSW | 00:23 | 00:43 | 04:44 | 05:04 | | 23:24 | 23:43 | 00:04 |
| BFLH | | | 04:58 | 05:18 | | 23:38 | | \| |
| BGAS | | | | | | | | 00:12 |

### S45 U (Sa)

| | | | | | | | | | | |
|---|---|---|---|---|---|---|---|---|---|---|
| BSKR | 00:08 | 00:28 | | | | 06:08 | 20 | 23:08 | 23:28 | 23:48 |
| BTHF | 00:10 | 00:30 | | 04:50 | 20 | 06:10 | | 23:10 | 23:30 | 23:50 |
| BSW | 00:23 | 00:43 | 04:34 | 05:04 | | 06:24 | | 23:24 | 23:43 | 00:04 |
| BFLH | | | 04:48 | 05:18 | | 06:38 | | 23:38 | | \| |
| BGAS | | | | | | | | | | 00:12 |

### S45 U (So)

| | | | | | | | | | | |
|---|---|---|---|---|---|---|---|---|---|---|
| BSKR | 00:08 | 00:28 | | | | 07:28 | 20 | 23:08 | 23:28 | 23:48 |
| BTHF | 00:10 | 00:30 | | 06:50 | 20 | 07:30 | | 23:10 | 23:30 | 23:50 |
| BSW | 00:23 | 00:43 | 06:34 | 07:04 | | 07:44 | | 23:24 | 23:43 | 00:04 |
| BFLH | | | 06:48 | 07:18 | | 07:58 | | 23:38 | | \| |
| BGAS | | | | | | | | | | 00:12 |

### S46 D (Mo-Fr)

| | | | | | | | | | | | | | | Mo | Fr | (D → AI) | |
|---|---|---|---|---|---|---|---|---|---|---|---|---|---|---|---|---|---|
| BKW | 00:01 | 00:21 | 00:41 | 01:01 | | 04:01 | 20 | 21:01 | 21:21 | 21:41 | 20 | 23:41 | 00:01 | 21:21 | | |
| BGAS | 00:16 | 00:36 | 00:56 | 01:16 | 03:56 | 04:16 | | 21:16 | 21:36 | 21:56 | | 23:56 | 00:16 | 21:36 | 04:53 | 05:13 |
| BTHF | 00:41 | 00:58 | 01:18 | | 04:21 | 04:41 | | 21:41 | 22:01 | 22:21 | | 00:21 | 00:39 | 22:01 | 05:18 | 05:38 |
| BSKR | 00:43 | | | | 04:23 | 04:43 | | 21:43 | 22:03 | 22:23 | | 00:23 | 00:41 | 22:03 | 05:20 | 05:40 |
| BWES | | | | | 04:39 | 04:59 | | 21:59 | 22:19 | 22:39 | | 00:39 | | 22:19 | | |
| BGB | | | | | | | | | | | | | | | | |

### S46 D (Sa)

| | | | | | | | | | | | | |
|---|---|---|---|---|---|---|---|---|---|---|---|---|
| BKW | 00:01 | 00:21 | NV | 04:41 | 05:01 | 20 | 11:41 | 20 | 18:41 | 20 | 23:41 |
| BGAS | 00:16 | 00:36 | | 04:56 | 05:16 | | 11:56 | | 18:56 | | 23:56 |
| BTHF | 00:41 | 00:59 | | 05:19 | 05:39 | | 12:19 | | 19:19 | | 00:19 |
| BSKR | 00:43 | 01:01 | | 05:21 | 05:41 | | 12:21 | | 19:21 | | 00:21 |
| BWES | | | | | 05:57 | | 12:38 | | 19:38 | | 00:37 |
| BGB | | | | | | | 12:50 | | 19:50 | | |

### S46 D (So)

| | | | | | | | | | | |
|---|---|---|---|---|---|---|---|---|---|---|
| BKW | 00:01 | 00:21 | NV | 06:21 | 20 | 11:41 | 20 | 18:41 | 20 | 23:41 |
| BGAS | 00:16 | 00:36 | | 06:36 | | 11:56 | | 18:56 | | 23:56 |
| BTHF | 00:39 | 00:59 | | 06:59 | | 12:19 | | 19:19 | | 00:19 |
| BSKR | 00:41 | 01:01 | | 07:01 | | 12:21 | | 19:21 | | 00:21 |
| BWES | | | | 07:17 | | 12:38 | | 19:38 | | 00:37 |
| BGB | | | | | | 12:50 | | 19:50 | | |

### S46 D (Mo-Fr)

| | | | | | | | | | | | | | | (Mo) | | (Fr) | | | (RI → D) | | | |
|---|---|---|---|---|---|---|---|---|---|---|---|---|---|---|---|---|---|---|---|---|---|---|
| BGB | | | | | | | | | | | | | | | | | | | | | | |
| BWES | 00:16 | 00:36 | | | 04:36 | 20 | 20:16 | 20:36 | 20:56 | 21:16 | 20 | 23:36 | 23:56 | 00:18 | 00:38 | 20:36 | 20:56 | 23:56 | | | | |
| BSKR | 00:33 | 00:53 | | | 04:53 | | 20:33 | 20:53 | 21:13 | 21:33 | | 23:53 | 00:13 | 00:35 | 00:55 | 20:53 | 21:13 | 00:13 | 10:45 | 11:05 | 20:45 | 21:05 |
| BTHF | 00:35 | 00:55 | 03:55 | 20 | 04:55 | | 20:35 | 20:55 | 21:15 | 21:35 | | 23:55 | 00:15 | 00:37 | 00:57 | 20:55 | 21:15 | 00:15 | 10:48 | 11:08 | 20:48 | 21:08 |
| BGAS | 01:00 | 01:19 | 04:20 | | 05:20 | | 21:00 | 21:20 | 21:40 | 22:00 | | 00:20 | 00:40 | 01:00 | 01:19 | 21:20 | 21:40 | 00:40 | 11:10 | 11:30 | 21:10 | 21:30 |
| BKW | 01:16 | | 04:36 | | 05:36 | | 21:16 | 21:36 | 21:56 | 22:16 | | 00:36 | 00:56 | 01:16 | | 21:36 | 21:56 | 00:58 | | | | |

### S46 D (Sa)

| | | | | | | | | | | | | | |
|---|---|---|---|---|---|---|---|---|---|---|---|---|---|
| BGB | | | | | | | | | 13:05 | 20 | 20:05 | | |
| BWES | 00:16 | 00:36 | | | | | | 05:58 | 20 | 13:18 | | 20:18 | 20 | 23:58 |
| BSKR | 00:33 | 00:57 | NV | 04:27 | 04:57 | 05:15 | 20 | 06:15 | | 13:35 | | 20:35 | | 00:15 |
| BTHF | 00:35 | 00:59 | | 04:29 | 04:59 | 05:17 | | 06:17 | | 13:37 | | 20:37 | | 00:17 |
| BGAS | 01:00 | 01:22 | | 05:00 | 05:22 | 05:40 | | 06:40 | | 14:00 | | 21:00 | | 00:40 |
| BKW | 01:16 | 01:38 | | 05:16 | 05:38 | 05:56 | | 06:56 | | 14:16 | | 21:16 | | 00:56 |

### S46 D (So)

| | | | | | | | | | | | | | | | | |
|---|---|---|---|---|---|---|---|---|---|---|---|---|---|---|---|---|
| BGB | | | | | | | | | | | | | 13:05 | 20 | 20:05 | | |
| BWES | 00:18 | 00:38 | | | | | | | | | 07:18 | 20 | 13:18 | | 20:18 | 20 | 23:58 |
| BSKR | 00:35 | 00:57 | NV | 04:27 | 04:57 | 30 | 05:57 | 06:27 | 06:55 | 20 | 07:35 | | 13:35 | | 20:35 | | 00:15 |
| BTHF | 00:35 | 00:59 | | 04:29 | 04:59 | | 05:59 | 06:29 | 06:57 | | 07:37 | | 13:37 | | 20:37 | | 00:17 |
| BGAS | 01:00 | 01:22 | | 05:00 | 05:22 | | 06:22 | 07:00 | 07:20 | | 08:00 | | 14:00 | | 21:00 | | 00:40 |
| BKW | 01:16 | 01:38 | | 05:16 | 05:38 | | 06:38 | 07:16 | 07:36 | | 08:16 | | 14:16 | | 21:16 | | 00:56 |

### S47 K (Mo-Fr)

| | morgens | | | | | | | | | abends | | |
|---|---|---|---|---|---|---|---|---|---|---|---|---|
| BSPF | 00:09 | 20 | 01:09 | 04:09 | 20 | 04:49 | 05:08 | 20 | 20:28 | 20:49 | 20 | 23:49 |
| BSW | 00:15 | | 01:15 | 04:15 | | 04:55 | 05:15 | | 20:35 | 20:55 | | 23:55 |
| BHER | | | | | | | 05:26 | | 20:46 | | | |

### S47 K (Sa)

| | | | | | | | | |
|---|---|---|---|---|---|---|---|---|
| BSPF | 05:09 | 20 | 06:09 | 06:28 | 06:48 | 20 | 20:28 |
| BSW | 05:15 | | 06:15 | 06:34 | 06:55 | | 20:35 |
| BHER | | | | | 07:04 | | 20:44 |

### S47 K (So)

| | | | | | | | |
|---|---|---|---|---|---|---|---|
| BSPF | 07:09 | 20 | 08:09 | 08:28 | 08:48 | 20 | 20:28 |
| BSW | 07:15 | | 08:15 | 08:34 | 08:55 | | 20:35 |
| BHER | | | | | 09:04 | | 20:44 |

### S47 K (Mo-Fr)

| | morgens | | | | | | | | | abends | | |
|---|---|---|---|---|---|---|---|---|---|---|---|---|
| BHER | | | | | | | 05:44 | 20 | 20:24 | | | |
| BSW | 00:19 | 20 | 01:19 | 04:19 | 20 | 05:39 | 05:56 | | 20:36 | 20:59 | 20 | 23:59 |
| BSPF | 00:25 | | 01:25 | 04:25 | | 05:45 | 06:02 | | 20:42 | 21:05 | | 00:05 |

### S47 K (Sa)

| | | | | | | |
|---|---|---|---|---|---|---|
| BHER | | | | 07:24 | 20 | 20:24 |
| BSW | 05:19 | 20 | 07:19 | 07:36 | | 20:36 |
| BSPF | 05:25 | | 07:25 | 07:42 | | 20:42 |

### S47 K (So)

| | | | | | | |
|---|---|---|---|---|---|---|
| BHER | | | | 09:24 | 20 | 20:24 |
| BSW | 07:19 | 20 | 09:19 | 09:36 | | 20:36 |
| BSPF | 07:25 | | 09:25 | 09:42 | | 20:42 |

### S5 E (Mo-Fr)

| | | | | | | | | | | (abends) | | | |
|---|---|---|---|---|---|---|---|---|---|---|---|---|---|
| BSTN | | | | | | | 04:09 | 20 | 20:29 | | 21:09 | | |
| BSTV | | | | | | 04:00 | 04:20 | | 20:40 | 20 | 21:20 | | |
| BMDF | 00:01 | 00:21 | 00:41 | | 04:01 | 04:21 | 04:41 | | 21:01 | | 21:41 | 20 | 23:41 |
| BLI | 00:14 | 00:34 | 00:54 | 03:54 | 04:14 | 04:34 | 04:54 | | 21:14 | | 21:54 | | 23:54 |
| BOSB | 00:23 | 00:43 | 01:03 | 04:03 | 04:23 | 04:43 | 05:03 | | 21:23 | | 22:03 | | 00:03 |
| BWKS | 00:47 | 01:07 | 01:27 | 04:27 | 04:47 | 05:07 | 05:27 | | 21:47 | | 22:27 | | 00:27 |
| BGWD | 00:50 | 01:10 | | | | | | | | | | | |

### S5 E (Sa)

| | | | | | | | | | | | | | | | | |
|---|---|---|---|---|---|---|---|---|---|---|---|---|---|---|---|---|
| BSTN | | | | | | | | 05:09 | 20 | 05:49 | 40 | 09:09 | 20 | 19:09 | 40 | 20:29 |
| BSTV | | | | | | | | 05:20 | | 06:00 | 20 | 09:20 | | 19:20 | 20 | 20:40 |
| BMDF | 00:01 | 00:21 | 00:42 | NV | 04:42 | 05:01 | 20 | 05:41 | | 06:21 | | 09:41 | | 19:41 | | 21:01 |
| BLI | 00:14 | 00:34 | 00:54 | | 04:54 | 05:14 | | 05:54 | | 06:34 | | 09:54 | | 19:54 | | 21:14 |
| BOSB | 00:23 | 00:43 | 01:07 | | 05:02 | 05:22 | | 06:02 | | 06:42 | | 10:02 | | 20:02 | | 21:22 |
| BWKS | 00:47 | | | | 05:27 | 05:47 | | 06:27 | | 07:07 | | 10:27 | | 20:27 | | 21:27 |

### S5 E (So)

| | | | | | | | | | | | | | | | | |
|---|---|---|---|---|---|---|---|---|---|---|---|---|---|---|---|---|
| BSTN | | | | | | | | 07:09 | 20 | 07:49 | 40 | 11:09 | 20 | 19:09 | 40 | 20:29 |
| BSTV | | | | | | | | 07:20 | | 08:00 | 20 | 11:20 | | 19:20 | 20 | 20:40 |
| BMDF | 00:01 | 00:21 | 00:42 | NV | 06:42 | 07:01 | 20 | 07:41 | | 08:21 | | 11:41 | | 19:41 | | 21:01 |
| BLI | 00:14 | 00:34 | 00:54 | | 06:54 | 07:14 | | 07:54 | | 08:34 | | 11:54 | | 19:54 | | 21:14 |
| BOSB | 00:23 | 00:42 | 01:07 | | 07:02 | 07:22 | | 08:02 | | 08:42 | | 12:02 | | 20:02 | | 21:22 |
| BWKS | 00:47 | | | | 07:27 | 07:47 | | 08:27 | | 09:07 | | 12:27 | | 20:27 | | 21:27 |

### S5 E (Mo-Fr)

| | | | | | | | | | | | (abends) | | | Fr |
|---|---|---|---|---|---|---|---|---|---|---|---|---|---|---|
| BGWD | | | | | 04:04 | 04:24 | | | | | | | | |
| BWKS | 00:07 | 00:27 | 00:37 | | 04:07 | 04:27 | 20 | 19:07 | 20 | 19:47 | 20 | 23:27 | 23:47 | 23:47 |
| BOSB | 00:32 | 00:52 | 01:02 | | 04:32 | 04:52 | | 19:32 | | 20:12 | | 23:32 | 00:12 | 00:12 |
| BLI | 00:41 | 01:01 | 01:10 | 04:21 | 04:41 | 05:01 | | 19:41 | | 20:21 | | 00:01 | 00:21 | 00:21 |
| BMDF | 00:52 | 01:13 | | 04:33 | 04:53 | 05:13 | | 19:53 | | 20:33 | | 00:12 | 00:32 | 00:33 |
| BSTV | | 01:34 | | 04:54 | 05:14 | 05:34 | | 20:14 | | 20:54 | | | | 00:54 |
| BSTN | | 01:44 | | 05:04 | 05:24 | 05:44 | | 20:24 | | 21:04 | | | | 01:04 |

### S5 E (Sa)

| | | | | | | | | | | | | | | |
|---|---|---|---|---|---|---|---|---|---|---|---|---|---|---|
| BGWD | | | | | | | | | | | | | | |
| BWKS | 00:07 | | | | | | 05:07 | 20 | 07:47 | 20 | 17:47 | 20 | 19:47 |
| BOSB | 00:32 | 00:53 | 01:13 | NV | 04:52 | 20 | 05:32 | | 08:12 | | 18:12 | | 20:12 |
| BLI | 00:41 | 01:05 | 01:22 | | 05:01 | | 05:41 | | 08:21 | | 18:21 | | 20:21 |
| BMDF | 00:52 | 01:16 | 01:35 | | 05:13 | | 05:53 | | 08:33 | | 18:33 | | 20:33 |
| BSTV | | | 01:55 | | 05:34 | | 06:14 | | 08:54 | | 18:54 | | 20:54 |
| BSTN | | | 02:06 | | 05:44 | | 06:24 | 40 | 09:04 | | 19:04 | 40 | 21:04 |

### S5 E (So)

| | | | | | | | | | | | | | |
|---|---|---|---|---|---|---|---|---|---|---|---|---|---|
| BGWD | | | | | | | | | | | | | |
| BWKS | 00:07 | | | | | | 07:07 | 20 | 09:47 | 20 | 17:47 | 20 | 19:47 |
| BOSB | 00:32 | 00:53 | 01:13 | NV | 06:52 | 20 | 07:32 | | 10:12 | | 18:12 | | 20:12 |
| BLI | 00:41 | 01:05 | 01:22 | | 07:01 | | 07:41 | | 10:21 | | 18:21 | | 20:21 |
| BMDF | 00:52 | 01:16 | 01:35 | | 07:13 | | 07:53 | | 10:33 | | 18:33 | | 20:33 |
| BSTV | | | 01:55 | | 07:34 | | 08:14 | | 10:54 | | 18:54 | | 20:54 |
| BSTN | | | 02:06 | | 07:44 | | 08:24 | 40 | 11:04 | | 19:04 | 40 | 21:04 |

### S5 EI (Mo-Fr)

| | | | | | | | | | | | | | (abends) | | | | | | | Fr |
|---|---|---|---|---|---|---|---|---|---|---|---|---|---|---|---|---|---|---|---|---|
| BHPG | | | | | | 05:44 | 20 | 09:04 | | 13:04 | 20 | 19:44 | | | | | | | | |
| BMDF | | | 04:31 | 04:51 | 20 | 05:51 | | 09:11 | 20 | 13:11 | | 19:51 | 20:11 | 20:31 | 20:51 | 20 | 21:31 | 21:49 | 20 | 23:09 | 20:31 |
| BLI | 04:04 | 20 | 04:44 | 05:04 | | 06:04 | | 09:24 | | 13:24 | | 20:04 | 20:24 | 20:44 | 21:04 | | 21:44 | 22:04 | | 23:24 | 20:44 |
| BWRS | 04:10 | | 04:50 | 05:11 | | 06:11 | | 09:31 | | 13:31 | | 20:11 | 20:30 | 20:50 | 21:10 | | 21:50 | 22:10 | | 23:30 | 20:50 |
| BOSB | | | | 05:13 | | 06:13 | | 09:33 | | 13:33 | | 20:13 | | | | | | | | | 20:52 |
| BWKS | | | | 05:37 | | 06:37 | | 09:57 | | 13:57 | | 20:37 | | | | | | | | | |

### S5 EI (Sa)

| | | | | |
|---|---|---|---|---|
| BHPG | | | | |
| BMDF | | 06:11 | 20 | 19:51 |
| BLI | 06:04 | 06:24 | | 20:04 |
| BWRS | 06:11 | 06:31 | | 20:11 |
| BOSB | 06:13 | 06:33 | | 20:13 |
| BWKS | 06:37 | 06:57 | | 20:37 |

### S5 EI (So)

| | | | | |
|---|---|---|---|---|
| BHPG | | | | |
| BMDF | | 08:11 | 20 | 19:51 |
| BLI | 08:04 | 08:24 | | 20:04 |
| BWRS | 08:11 | 08:31 | | 20:11 |
| BOSB | 08:13 | 08:33 | | 20:13 |
| BWKS | 08:37 | 08:57 | | 20:37 |

| S5 EI (Mo-Fr) | | | | | | | | | | | | | | | | | (abends) | | | | | | | | |
|---|---|---|---|---|---|---|---|---|---|---|---|---|---|---|---|---|---|---|---|---|---|---|---|---|---|
| BWKS | | | | | 05:17 | 20 | 07:57 | 08:17 | 20 | 11:37 | 11:57 | 20 | 18:37 | 18:57 | 20 | 19:57 | 20:17 | 20:37 | | | | | | | |
| BOSB | | | | | 05:42 | | 08:22 | 08:42 | | 12:02 | 12:22 | | 19:02 | 19:22 | | 20:22 | 20:42 | 21:02 | | | | | | | |
| BWRS | 04:24 | 04:44 | 05:04 | 20 | 05:44 | | 08:24 | 08:44 | | 12:04 | 12:24 | | 19:04 | 19:24 | | 20:24 | 20:44 | 21:04 | 21:24 | 21:44 | 20 | 23:04 | 23:22 | 23:42 | |
| BLI | 04:31 | 04:51 | 05:11 | | 05:51 | | 08:31 | 08:51 | | 12:11 | 12:31 | | 19:11 | 19:31 | | 20:31 | 20:51 | 21:11 | 21:31 | 21:51 | | 23:11 | 23:28 | 23:48 | |
| BMDF | 04:44 | 08:04 | 05:23 | | 06:03 | | 08:43 | 09:04 | | 12:24 | 12:43 | | 19:23 | 19:42 | | 20:42 | 21:04 | 21:22 | 21:42 | 22:04 | | 23:24 | | | |
| BHPG | | | 05:29 | | 06:09 | | 08:49 | | | | 12:49 | | 19:29 | | | | | | | | | | | | |

| S5 EI (Sa) | | | | | | |
|---|---|---|---|---|---|---|
| BWKS | | 06:17 | 20 | 19:17 | 19:37 | 19:57 |
| BOSB | | 06:42 | | 19:42 | 20:02 | 20:22 |
| BWRS | 06:24 | 06:44 | | 19:44 | 20:04 | 20:24 |
| BLI | 06:31 | 06:51 | | 19:51 | 20:11 | 20:31 |
| BMDF | 06:44 | 07:04 | | 20:04 | 20:22 | 20:42 |
| BHPG | | | | | | |

| S5 EI (So) | | | | | | |
|---|---|---|---|---|---|---|
| BWKS | | 08:17 | 20 | 19:17 | 19:37 | 19:57 |
| BOSB | | 08:42 | | 19:42 | 20:02 | 20:22 |
| BWRS | 08:24 | 08:44 | | 19:44 | 20:04 | 20:24 |
| BLI | 08:31 | 08:51 | | 19:51 | 20:11 | 20:31 |
| BMDF | 08:44 | 09:04 | | 20:04 | 20:22 | 20:42 |
| BHPG | | | | | | |

| S5 EIII | | | | | | | FS | (Sa) | | (So) | |
|---|---|---|---|---|---|---|---|---|---|---|---|
| BSTN | 00:09 | | 21:49 | 40 | 23:09 | | 23:49 | 04:12 | 04:49 | 06:12 | 06:49 |
| BSTV | 00:20 | 21:40 | 22:00 | 20 | 23:20 | 23:40 | 00:00 | 04:22 | 05:00 | 06:22 | 07:00 |
| BMDF | 00:40 | 22:00 | 22:20 | | 23:40 | 00:00 | 00:20 | 04:41 | 05:20 | 06:41 | 07:20 |

| S5 EIII (abends) | | | | | | F-S | (Sa) | (So) |
|---|---|---|---|---|---|---|---|---|
| BMDF | 00:53 | 20:53 | 21:13 | 20 | 00:13 | 00:33 | 01:17 | 01:17 |
| BSTV | 01:14 | 21:13 | 21:34 | | 00:34 | 00:54 | 01:36 | 01:36 |
| BSTN | 01:25 | | 21:44 | 40 | 00:44 | 01:04 | 01:46 | 01:46 |

| S7 O (Mo-Fr) | | | | | | | | |
|---|---|---|---|---|---|---|---|---|
| BAF | 00:11 | 20 | 00:51 | | | 04:11 | 20 | 23:51 |
| BLI | 00:26 | | 01:06 | | 04:06 | 04:26 | | 00:06 |
| BCHS | 00:57 | | 01:37 | 04:17 | 04:37 | 04:57 | | 00:37 |
| BGWD | 01:03 | | 01:42 | 04:23 | 04:43 | 05:03 | | 00:43 |
| BPDH | 01:25 | | | 04:45 | 05:05 | 05:25 | | 01:05 |

| S7 O (Sa) | | | | | | | | |
|---|---|---|---|---|---|---|---|---|
| BAF | 00:11 | 00:31 | 00:51 | NV | 04:23 | 04:51 | 20 | 23:51 |
| BLI | 00:26 | 00:46 | 01:08 | | 04:39 | 05:06 | | 00:06 |
| BCHS | 00:57 | 01:21 | 01:51 | | 05:17 | 05:37 | | 00:37 |
| BGWD | 01:03 | 01:33 | 02:03 | | 05:23 | 05:43 | | 00:43 |
| BPDH | 01:25 | 01:55 | 02:25 | | 05:45 | 06:05 | | 01:05 |

| S7 O (So) | | | | | | | | |
|---|---|---|---|---|---|---|---|---|
| BAF | 00:11 | 00:31 | 00:51 | NV | 06:23 | 06:51 | 20 | 23:51 |
| BLI | 00:26 | 00:46 | 01:08 | | 06:39 | 07:06 | | 00:06 |
| BCHS | 00:57 | 01:21 | 01:51 | | 07:17 | 07:37 | | 00:37 |
| BGWD | 01:03 | 01:33 | 02:03 | | 07:23 | 07:43 | | 00:43 |
| BPDH | 01:25 | 01:55 | 02:25 | | 07:45 | 08:05 | | 01:05 |

| S7 O (Mo-Fr) | | | | | | | | |
|---|---|---|---|---|---|---|---|---|
| BPDH | 00:00 | 00:20 | 00:40 | | | 04:00 | 20 | 23:40 |
| BGWD | 00:22 | 00:42 | 01:02 | | 04:02 | 04:22 | | 00:02 |
| BOSB | 00:49 | 01:09 | 01:29 | 04:09 | 04:29 | 04:49 | | 00:29 |
| BLI | 00:58 | 01:18 | | 04:18 | 04:38 | 04:58 | | 00:38 |
| BAF | 01:14 | | | 04:34 | 04:54 | 05:14 | | 00:54 |

| S7 O (Sa) | | | | | | | |
|---|---|---|---|---|---|---|---|
| BPDH | 00:00 | 00:20 | NV | 04:10 | 04:40 | 20 | 23:40 |
| BGWD | 00:22 | 00:42 | | 04:32 | 05:02 | | 00:02 |
| BOSB | 00:49 | 01:09 | | 05:09 | 05:29 | | 00:29 |
| BLI | 00:58 | 01:20 | | 05:18 | 05:38 | | 00:38 |
| BAF | 01:14 | 01:35 | | 05:34 | 05:54 | | 00:54 |

| S7 O (So) | | | | | | | |
|---|---|---|---|---|---|---|---|
| BPDH | 00:00 | 00:20 | NV | 06:10 | 06:40 | 20 | 23:40 |
| BGWD | 00:22 | 00:42 | | 06:32 | 07:02 | | 00:02 |
| BOSB | 00:49 | 01:09 | | 07:09 | 07:29 | | 00:29 |
| BLI | 00:58 | 01:20 | | 07:18 | 07:38 | | 00:38 |
| BAF | 01:14 | 01:35 | | 07:34 | 07:54 | | 00:54 |

| S7 OI (Mo-Fr) | | | | | | | | | | | | | |
|---|---|---|---|---|---|---|---|---|---|---|---|---|---|
| BAF | | | | | 05:01 | 20 | 20:01 | 20:21 | 20 | 22:01 | 20 | 22:41 | 23:01 |
| BOSB | | | | 05:06 | 05:26 | | 20:26 | 20:46 | | 22:26 | | 23:06 | 23:26 |
| BCHS | | | 05:07 | 05:27 | 05:47 | | 20:47 | 21:07 | | 22:47 | | 23:27 | 23:47 |
| BWKS | | | 05:10 | 05:30 | 05:50 | | 20:50 | 21:10 | | 22:50 | | 23:30 | |
| BGWD | | | 05:13 | 05:33 | 05:53 | | 20:53 | 21:13 | | 22:53 | | 23:32 | |
| BWSS | 04:42 | 20 | 05:23 | 05:43 | 06:03 | | 21:03 | 21:22 | | 23:02 | | | |
| BPDH | 04:55 | | 05:35 | 05:55 | 06:15 | | 21:15 | | | | | | |

| S7 OI (Sa) | | | | | | | | | | | | | |
|---|---|---|---|---|---|---|---|---|---|---|---|---|---|
| BAF | | | | | 07:01 | 20 | 20:01 | 20:21 | 20 | 22:01 | 20 | 22:41 | 23:01 |
| BOSB | | | | 07:06 | 07:26 | | 20:26 | 20:46 | | 22:26 | | 23:06 | 23:26 |
| BCHS | | | 07:07 | 07:27 | 07:47 | | 20:47 | 21:07 | | 22:47 | | 23:27 | 23:47 |
| BWKS | | | 07:10 | 07:30 | 07:50 | | 20:50 | 21:10 | | 22:50 | | 23:30 | |
| BGWD | | | 07:13 | 07:33 | 07:53 | | 20:53 | 21:13 | | 22:53 | | 23:32 | |
| BWSS | 06:43 | 20 | 07:23 | 07:43 | 08:03 | | 21:03 | 21:22 | | 23:02 | | | |
| BPDH | 06:55 | | 07:35 | 07:55 | 08:15 | | 21:15 | | | | | | |

| S7 OI (So) | | | | | | | | | | |
|---|---|---|---|---|---|---|---|---|---|---|
| BAF | | | | | 09:01 | 20 | 20:01 | 20 | 20:41 | 21:01 |
| BOSB | | | | 09:06 | 09:26 | | 20:26 | | 21:06 | 21:26 |
| BCHS | | | 09:07 | 09:27 | 09:47 | | 20:47 | | 21:27 | 21:47 |
| BWKS | | | 09:10 | 09:30 | 09:50 | | 20:50 | | 21:30 | |
| BGWD | | | 09:13 | 09:33 | 09:53 | | 20:53 | | 21:32 | |
| BWSS | 08:43 | 20 | 09:23 | 09:43 | 10:03 | | 21:03 | | | |
| BPDH | 08:55 | | 09:35 | 09:55 | 10:15 | | 21:15 | | | |

| S7 OI (Mo-Fr) | | | | | | | | | | |
|---|---|---|---|---|---|---|---|---|---|---|
| BPDH | | | | 05:10 | 20 | 21:10 | 21:30 | | | |
| BWSS | | | 05:02 | 05:22 | | 21:22 | 21:42 | | | |
| BGWD | 04:32 | 20 | 05:12 | 05:32 | | 21:32 | | | | |
| BWKS | 04:35 | | 05:15 | 05:35 | | 21:35 | 21:55 | 20 | 22:35 | 22:55 |
| BOSB | 04:59 | | 05:39 | 05:59 | | 21:59 | 22:19 | | 22:59 | 23:19 |
| BAF | 05:24 | | 06:04 | 06:24 | | 22:24 | 22:44 | | 23:24 | |

| S7 OI (Sa) | | | | | | | | | | |
|---|---|---|---|---|---|---|---|---|---|---|
| BPDH | | | | 07:10 | 20 | 21:10 | 21:30 | | | |
| BWSS | | | 07:02 | 07:22 | | 21:22 | 21:42 | | | |
| BGWD | 06:32 | 20 | 07:12 | 07:32 | | 21:32 | | | | |
| BWKS | 06:35 | | 07:15 | 07:35 | | 21:35 | 21:55 | 20 | 22:35 | 22:55 |
| BOSB | 06:59 | | 07:39 | 07:59 | | 21:59 | 22:19 | | 22:59 | 23:19 |
| BAF | 07:24 | | 08:04 | 08:24 | | 22:24 | 22:44 | | 23:24 | |

| S7 OI (So) | | | | | | | | | |
|---|---|---|---|---|---|---|---|---|---|
| BPDH | | | | 09:10 | 20 | 20:10 | 20:30 | 20 | 21:30 |
| BWSS | | | 09:02 | 09:22 | | 20:22 | 20:42 | | 21:42 |
| BGWD | 08:32 | 20 | 09:12 | 09:32 | | 20:32 | 20:52 | | |
| BWKS | 08:35 | | 09:15 | 09:35 | | 20:35 | 20:55 | | |
| BOSB | 08:59 | | 09:39 | 09:59 | | 20:59 | 21:19 | | |
| BAF | 09:24 | | 10:04 | 10:24 | | 21:24 | | | |

| S75 T (Mo-Fr) | | | | | | | |
|---|---|---|---|---|---|---|---|
| BWAB | 00:16 | 00:36 | 00:56 | | 04:16 | 20 | 23:56 |
| BHH | 00:18 | 00:38 | 00:57 | 03:58 | 04:18 | | 23:58 |
| BLI | 00:31 | 00:51 | | 04:11 | 04:31 | | 00:11 |
| BOSB | 00:40 | 01:00 | | 04:20 | 04:40 | | 00:20 |

| S75 T (Sa) | | | | | | | | |
|---|---|---|---|---|---|---|---|---|
| BWAB | 00:16 | 20 | 00:56 | 01:16 | NV | 04:36 | 20 | 23:56 |
| BHH | 00:18 | | 00:58 | 01:18 | | 04:38 | | 23:58 |
| BLI | 00:31 | | 01:11 | 01:31 | | 04:51 | | 00:11 |
| BOSB | 00:40 | | 01:20 | | | 05:00 | | 00:20 |

| S75 T (So) | | | | | | | | |
|---|---|---|---|---|---|---|---|---|
| BWAB | 00:16 | 20 | 00:56 | 01:16 | NV | 06:36 | 20 | 23:56 |
| BHH | 00:18 | | 00:58 | 01:18 | | 06:38 | | 23:58 |
| BLI | 00:31 | | 01:11 | 01:31 | | 06:51 | | 00:11 |
| BOSB | 00:40 | | 01:20 | | | 07:00 | | 00:20 |

| S75 T (Mo-Fr) | | | | | | | |
|---|---|---|---|---|---|---|---|
| BOSB | 00:04 | 00:24 | 00:44 | | 04:04 | 20 | 23:44 |
| BLI | 00:13 | 00:33 | 00:53 | | 04:13 | | 23:53 |
| BHH | 00:27 | 00:47 | 01:06 | 04:07 | 04:27 | | 00:07 |
| BWAB | 00:29 | 00:49 | | 04:09 | 04:29 | | 00:09 |

| S75 T (Sa) | | | | | | | | |
|---|---|---|---|---|---|---|---|---|
| BOSB | 00:04 | 20 | 01:04 | | 04:44 | 20 | 23:44 |
| BLI | 00:13 | | 01:13 | NV | 04:53 | | 23:53 |
| BHH | 00:27 | | 01:27 | | 05:07 | | 00:07 |
| BWAB | 00:29 | | 01:29 | | 05:09 | | 00:09 |

| S75 T (So) | | | | | | | |
|---|---|---|---|---|---|---|---|
| BOSB | 00:04 | 20 | 01:04 | | 06:44 | 20 | 23:44 |
| BLI | 00:13 | | 01:13 | NV | 06:53 | | 23:53 |
| BHH | 00:27 | | 01:27 | | 07:07 | | 00:07 |
| BWAB | 00:29 | | 01:29 | | 07:09 | | 00:09 |

| S75 TI (Mo-Fr) | | | | | | | | S75 TI (Sa) | | | | S75 TI (So) | | |
|---|---|---|---|---|---|---|---|---|---|---|---|---|---|---|
| BWAB | 05:06 | 20 | 08:06 | 20 | 13:46 | 20 | 20:46 | 08:46 | 20 | 19:26 | 19:46 | 10:46 | 20 | 19:46 |
| BWRS | 05:28 | | 08:28 | | 14:08 | | 21:08 | 09:08 | | 19:48 | 20:08 | 11:08 | | 20:08 |
| BOSB | 05:30 | | 08:30 | | 14:10 | | 21:10 | | | 19:50 | | | | |

| S75 TI (Mo-Fr) | | | | | | | | | |
|---|---|---|---|---|---|---|---|---|---|
| BOSB | | | 05:34 | 20 | 08:34 | | 14:14 | 20 | 20:34 |
| BWRS | | | 05:37 | | 08:37 | 20 | 14:17 | | 20:37 |
| BLI | 05:03 | 20 | 05:43 | | 08:43 | | 14:23 | | 20:43 |
| BWAB | 05:19 | | 05:59 | | 08:59 | | 14:39 | | 20:59 |

| S75 TI (Sa) | | | | | | S75 TI (So) | | | | |
|---|---|---|---|---|---|---|---|---|---|---|
| BOSB | | 08:34 | 08:54 | | | | 10:34 | 10:54 | | |
| BWRS | | 08:37 | 08:57 | 20 | 19:37 | | 10:37 | 10:57 | 20 | 19:37 |
| BLI | 08:23 | 08:43 | 09:03 | | 19:43 | 10:23 | 10:43 | 11:03 | | 19:43 |
| BWAB | 08:39 | 08:59 | 09:19 | | 19:59 | 10:39 | 10:59 | 11:19 | | 19:59 |

| S8 N (Mo-Do) | | | | | | | | | | | | | | | | | | abends | | | | |
|---|---|---|---|---|---|---|---|---|---|---|---|---|---|---|---|---|---|---|---|---|---|---|
| BZTH | | | | | | 05:20 | 20* | 09:00 | | | | | 15:00 | 20* | 18:00 | 20* | 19:40 | | | | | |
| BGAS | 00:08 | 00:28 | 00:48 | 04:08 | 20* | 05:28 | | 09:08 | 20* | 13:08 | 13:28 | 20* | 15:08 | | 18:08 | | 19:48 | 20:08 | 20 | 20:48 | 20 | 23:48 |
| BPKW | 00:47 | 01:07 | 01:27 | 04:47 | | 06:07 | | 09:47 | | 13:47 | 14:07 | | 15:47 | | 18:47 | | 20:27 | 20:47 | | 21:27 | | 00:27 |
| BBLB | | 01:12 | 01:32 | 04:52 | | 06:12 | | 09:52 | | 13:52 | 14:12 | | 15:52 | | 18:52 | | 20:32 | 20:52 | | 21:32 | | 00:32 |
| BBIW | | | | 05:13 | | 06:33 | | 10:13 | | 14:13 | 14:33 | | 16:13 | | 19:13 | | 20:56 | 21:13 | | 21:53 | 60 | 00:53 |

| S8 N (Fr) | | | | |
|---|---|---|---|---|
| BZTH | 13:20 | 20* | | |
| BGAS | 13:28 | | 20* | 19:48 |
| BPKW | 14:07 | | | 20:27 |
| BBLB | 14:12 | | | 20:32 |
| BBIW | 14:33 | | | 20:56 |

| S8 N (Sa) | | | | | | | | | |
|---|---|---|---|---|---|---|---|---|---|
| BZTH | | | | | | | | | |
| BGAS | 00:08 | 00:28 | NV | 04:18 | 04:48 | 20 | 06:48 | 20* | 19:48 |
| BPKW | 00:47 | 01:07 | | 04:57 | 05:27 | | 07:27 | | 20:27 |
| BBLB | 00:52 | 01:12 | | 05:02 | 05:32 | | 07:32 | | 20:32 |
| BBIW | | | | 05:23 | 05:53 | 60 | 07:53 | | 20:56 |

| S8 N (So) | | | | | | | | | | | | | |
|---|---|---|---|---|---|---|---|---|---|---|---|---|---|
| BZTH | | | | | | | | | | | | | |
| BGAS | 00:08 | 00:28 | NV | 04:18 | 04:48 | 30 | 06:48 | 20 | 07:48 | 20 | 08:28 | 20* | 19:48 |
| BPKW | 00:47 | 01:07 | | 04:57 | 05:27 | | 07:27 | | 08:27 | | 09:07 | | 20:27 |
| BBLB | 00:52 | 01:12 | | 05:02 | 05:32 | | 07:32 | | 08:32 | | 09:12 | | 20:32 |
| BBIW | | | | 05:23 | 05:53 | 60 | 07:53 | 60* | 08:56 | | 09:33 | | 20:56 |

*: Die Fahrten zur Minute 32 ab Blankenburg halten zwei Minuten später in Hohen Neuendorf und drei Minuten später in Birkenwerder (Sa/So nur in geraden Stunden).

| S8 N (Mo-Do) | | | | | | | | | | | | | | | | | | | | abends | | | | |
|---|---|---|---|---|---|---|---|---|---|---|---|---|---|---|---|---|---|---|---|---|---|---|---|---|
| BBIW | | | | | | 04:24 | 20 | 07:44 | 20 | 11:44 | 12:04 | 20 | 13:44 | 20 | 16:44 | 20 | 18:24 | 20 | 20:24 | 20:44 | | 21:24 | 60 | 23:24 |
| BBLB | 00:05 | 00:25 | | 04:05 | 04:25 | 04:45 | | 08:05 | | 12:05 | 12:25 | | 14:05 | | 17:05 | | 18:45 | | 20:45 | 21:05 | 20 | 21:45 | 20 | 23:45 |
| BPKW | 00:10 | 00:30 | 00:50 | 04:10 | 04:30 | 04:50 | | 08:10 | | 12:10 | 12:30 | | 14:10 | | 17:10 | | 18:50 | | 20:50 | 21:10 | | 21:50 | | 23:50 |
| BGAS | 00:47 | 01:07 | 01:27 | 04:47 | 05:07 | 05:27 | | 08:47 | | 12:47 | 13:07 | | 14:47 | | 17:47 | | 19:27 | | 21:27 | 21:47 | | 22:27 | | 00:27 |
| BZTH | | | | | 05:15 | 05:35 | | 08:55 | | | | | 14:55 | | 17:55 | | 19:35 | | | | | | | |

| S8 N (Fr) | | | | |
|---|---|---|---|---|
| BBIW | 12:04 | 20 | 20 | 18:24 |
| BBLB | 12:25 | | | 18:45 |
| BPKW | 12:30 | | | 18:50 |
| BGAS | 13:07 | | | 19:27 |
| BZTH | 13:15 | | | |

| S8 N (Sa) | | | | | | | | | |
|---|---|---|---|---|---|---|---|---|---|
| BBIW | | | 00:37 | | 04:24 | 60 | 07:24 | 20 | 20:24 |
| BBLB | 00:05 | 00:25 | 00:58 | | 04:45 | 20 | 07:45 | | 20:45 |
| BPKW | 00:10 | 00:30 | 01:03 | NV | 04:50 | | 07:50 | | 20:50 |
| BGAS | 00:47 | 01:07 | 01:40 | | 05:27 | | 08:27 | | 21:27 |
| BZTH | | | | | | | | | |

| S8 N (So) | | | | | | | | | | | | | | | |
|---|---|---|---|---|---|---|---|---|---|---|---|---|---|---|---|
| BBIW | | | 00:37 | | 04:34 | | 05:37 | | 06:24 | 60 | 08:24 | | 09:04 | 20 | 20:24 |
| BBLB | 00:05 | 00:25 | 00:58 | | 04:55 | 05:25 | 05:58 | 06:25 | 06:45 | 20 | 08:45 | 20 | 09:25 | | 20:45 |
| BPKW | 00:10 | 00:30 | 01:03 | NV | 05:00 | 05:30 | 06:03 | 06:30 | 06:50 | | 08:50 | | 09:30 | | 20:50 |
| BGAS | 00:47 | 01:07 | 01:40 | | 05:37 | 06:07 | 06:40 | 07:07 | 07:27 | | 09:27 | | 10:07 | | 21:27 |
| BZTH | | | | | | | | | | | | | | | |

| S85 NI (Mo-Fr) | | | | | | S85 NI (Sa) | | | S85 NI (So) | | |
|---|---|---|---|---|---|---|---|---|---|---|---|
| BPKW | 05:20 | 20 | 18:20 | 20 | 21:20 | 08:00 | 20 | 21:20 | 10:00 | 20 | 21:20 |
| BSW | 05:48 | | 18:48 | | 21:48 | 08:28 | | 21:48 | 10:28 | | 21:48 |
| BGAS | 05:57 | | 18:57 | | | | | | | | |

| S85 NI (Mo-Fr) | | | | | | | | S85 NI (Sa) | | | | S85 NI (So) | | | | | |
|---|---|---|---|---|---|---|---|---|---|---|---|---|---|---|---|---|---|
| BGAS | | 04:59 | 20 | 19:19 | | | | 07:19 | 07:39 | | | | | 09:59 | 10:19 | | |
| BSW | 04:49 | 05:08 | | 19:28 | 19:49 | 20 | 20:49 | 07:29 | 07:49 | 20 | 20:49 | 09:29 | 20 | 10:09 | 10:29 | 20 | 20:49 |
| BPKW | 05:18 | 05:38 | | 19:58 | 20:18 | | 21:18 | 07:58 | 08:18 | | 21:18 | 09:58 | | 10:38 | 10:58 | | 21:18 |

| S9 C (Mo-Fr) | | | | | | | | | | | Fr |
|---|---|---|---|---|---|---|---|---|---|---|---|
| BFLH | 00:17 | 20 | 00:57 | 01:17 | | | 03:57 | 20 | 23:37 | 23:57 | 23:57 |
| BSW | 00:32 | | 01:12 | 01:32 | | 03:52 | 04:12 | | 23:52 | 00:12 | 00:12 |
| BLI | \| | | \| | \| | 03:39 | \| | \| | | \| | \| | \| |
| BOSB | 00:49 | | 01:29 | 01:48 | 03:49 | 04:09 | 04:29 | | 00:09 | 00:29 | 00:29 |
| BWKS | 01:12 | | 01:52 | | 04:13 | 04:33 | 04:53 | | 00:33 | 00:53 | 00:53 |
| BSPA | | | | | 04:27 | 04:47 | 05:07 | | 00:47 | 01:07 | 01:09 |

| S9 C (Sa) | | | | | | | | |
|---|---|---|---|---|---|---|---|---|
| BFLH | 00:17 | 00:37 | NV | 04:32 | 04:57 | 20 | 23:37 | 23:57 |
| BSW | 00:32 | 00:52 | | 04:48 | 05:12 | | 23:52 | 00:12 |
| BLI | \| | \| | | \| | \| | | \| | \| |
| BOSB | 00:49 | 01:09 | | 05:08 | 05:29 | | 00:09 | 00:29 |
| BWKS | 01:13 | 01:40 | | 05:32 | 05:53 | | 00:33 | 00:53 |
| BSPA | 01:27 | 01:54 | | 05:46 | 06:07 | | 00:47 | 01:09 |

| S9 C (So) | | | | | | | |
|---|---|---|---|---|---|---|---|
| BFLH | 00:17 | 00:37 | NV | 06:32 | 06:57 | 20 | 23:57 |
| BSW | 00:32 | 00:52 | | 06:48 | 07:12 | | 00:12 |
| BLI | \| | \| | | \| | \| | | \| |
| BOSB | 00:49 | 01:09 | | 07:08 | 07:29 | | 00:29 |
| BWKS | 01:13 | 01:40 | | 07:32 | 07:53 | | 00:53 |
| BSPA | 01:27 | 01:54 | | 07:46 | 08:07 | | 01:07 |

| S9 C (Mo-Fr) | | | | | | | |
|---|---|---|---|---|---|---|---|
| BSPA | 00:18 | 00:38 | | | 03:58 | 20 | 23:58 |
| BWKS | 00:32 | 00:52 | 03:12 | 20 | 04:12 | | 00:12 |
| BSW | 01:13 | 01:33 | 03:53 | | 04:53 | | 00:53 |
| BFLH | 01:29 | | 04:09 | | 05:09 | | 01:09 |

| S9 C (Sa) | | | | | | | |
|---|---|---|---|---|---|---|---|
| BSPA | 00:18 | 00:38 | NV | 04:36 | 04:58 | 20 | 23:58 |
| BWKS | 00:32 | 00:52 | | 04:50 | 05:12 | | 00:12 |
| BSW | 01:20 | 01:50 | | 05:33 | 05:53 | | 00:53 |
| BFLH | 01:36 | 02:06 | | 05:49 | 06:09 | | 01:09 |

| S9 C (So) | | | | | | | | | | | | | |
|---|---|---|---|---|---|---|---|---|---|---|---|---|---|
| BSPA | 00:18 | 00:38 | NV | 03:36 | 04:06 | 30 | 05:06 | 05:36 | 06:06 | 06:36 | 06:58 | 20 | 23:58 |
| BWKS | 00:32 | 00:52 | | 03:50 | 04:20 | | 05:20 | 05:50 | 06:20 | 06:50 | 07:12 | | 00:12 |
| BSW | 01:20 | 01:50 | | 04:50 | 05:20 | | 06:20 | 06:50 | 07:13 | 07:33 | 07:53 | | 00:53 |
| BFLH | 01:36 | 02:06 | | 05:09 | 05:36 | | 06:36 | 07:09 | 07:29 | 07:49 | 08:09 | | 01:09 |

| U1 → Uhlandstraße (tagsüber) | | | (früh/abends) | (nachts) |
|---|---|---|---|---|
| WA | S U3 M BUS BUS | 06 16 26 36 46 56 | 07 17 27 37 47 57 | 07 22 37 52 |
| S | U3 BUS BUS | 08 18 28 38 48 58 | 09 19 29 39 49 59 | 09 24 39 54 |
| Gr | U3 M | 10 20 30 40 50 00 | 11 21 31 41 51 01 | 11 26 41 56 |
| Kbo | U3 U8 BUS | 12 22 32 42 52 02 | 12 22 32 42 52 02 | 13 28 43 58 |
| Pr | U3 BUS | 14 24 34 44 54 04 | 14 24 34 44 54 04 | 15 30 45 00 |
| Ho | U3 U6 M BUS BUS | 16 26 36 46 56 06 | 16 26 36 46 56 06 | 17 32 47 02 |
| Mo | U3 U7 | 17 27 37 47 57 07 | 18 28 38 48 58 08 | 18 33 48 03 |
| Go | U2 U3 | 19 29 39 49 59 09 | 19 29 39 49 59 09 | 20 35 50 05 |
| Kus | U3 M BUS | 21 31 41 51 01 11 | 21 31 41 51 01 11 | 22 37 52 07 |
| Nu | U2 U3 U4 M BUS BUS | 22 32 42 52 02 12 | 23 33 43 53 03 13 | 23 38 53 08 |
| Wt | U2 U3 M BUS | 24 34 44 54 04 14 | 25 35 45 55 05 15 | 25 40 55 10 |
| Kfo | U9 M X BUS BUS | 26 36 46 56 06 16 | 27 37 47 57 07 17 | 27 42 57 12 |
| U | M X BUS BUS | 27 37 47 57 07 17 | 28 38 48 58 08 18 | 28 43 58 13 |

| U1 → Warschauer Straße (tagsüber) | | | (früh/abends) | (nachts) |
|---|---|---|---|---|
| U | M X BUS BUS | 00 10 20 30 40 50 | 00 10 20 30 40 50 | 02 17 32 47 |
| Kfo | U9 M X BUS BUS | 01 11 21 31 41 51 | 01 11 21 31 41 51 | 03 18 33 48 |
| Wt | U2 U3 M BUS | 02 12 22 32 42 52 | 02 12 22 32 42 52 | 04 19 34 49 |
| Nm | U2 U3 U4 M BUS BUS | 04 14 24 34 44 54 | 04 14 24 34 44 54 | 06 21 36 51 |
| Kus | U3 M BUS | 06 16 26 36 46 56 | 06 16 26 36 46 56 | 08 23 38 53 |
| Go | U2 U3 | 08 18 28 38 48 58 | 08 18 28 38 48 58 | 10 25 40 55 |
| Mo | U3 U7 | 09 19 29 39 49 59 | 09 19 29 39 49 59 | 11 26 41 56 |
| Ho | U3 U6 M BUS BUS | 11 21 31 41 51 01 | 11 21 31 41 51 01 | 13 28 43 58 |
| Pr | U3 BUS | 13 23 33 43 53 03 | 13 23 33 43 53 03 | 15 30 45 00 |
| Kbo | U3 U8 BUS BUS | 15 25 35 45 55 05 | 15 25 35 45 55 05 | 19 34 49 04 |
| Gr | U3 M | 16 26 36 46 56 06 | 16 26 36 46 56 06 | 20 35 50 05 |
| S | U3 BUS BUS | 18 28 38 48 58 08 | 18 28 38 48 58 08 | 22 37 52 07 |
| WA | S U3 M BUS BUS | 20 30 40 50 00 10 | 20 30 40 50 00 10 | 24 39 54 09 |

| U3 → Krumme Lanke | | (Mo-Fr tagsüber) | (Sa-So) | (früh/abends) | (nachts) |
|---|---|---|---|---|---|
| WA | S U1 M BUS BUS | 03 09 13 19 23 29 33 39 43 49 53 59 | 01 11 21 31 41 51 | | |
| S | U1 BUS BUS | 05 11 15 21 25 31 35 41 45 51 55 01 | 03 13 23 33 43 53 | | |
| Gr | U1 M | 07 13 17 23 27 33 37 43 47 53 57 03 | 05 15 25 35 45 55 | | |
| Kbo | U1 U8 BUS | 09 15 19 25 29 35 39 45 49 55 59 05 | 07 17 27 37 47 57 | | |
| Pr | U1 BUS | 11 17 21 27 31 37 41 47 51 57 01 07 | 09 19 29 39 49 59 | | |
| Ho | U1 U6 M BUS BUS | 13 19 23 29 33 39 43 49 53 59 03 09 | 11 21 31 41 51 01 | | |
| Mo | U1 U7 | 14 20 24 30 34 40 44 50 54 00 04 10 | 12 22 32 42 52 02 | | |
| Go | U1 U2 | 16 22 26 32 36 42 46 52 56 02 06 12 | 14 24 34 44 54 04 | | |
| Kus | U1 M BUS | 18 24 28 34 38 44 48 54 58 04 08 14 | 16 26 36 46 56 06 | | |
| Nu | U1 U2 U4 M BUS BUS | 19 25 29 35 39 45 49 55 59 05 09 15 | 17 27 37 47 57 07 | 08 18 28 38 48 58 | 12 27 42 57 |
| Wt | U1 U2 M BUS | 21 27 31 37 41 47 51 57 01 07 11 17 | 19 29 39 49 59 09 | 10 20 30 40 50 00 | 14 29 44 59 |
| Au | | 23 29 33 39 43 49 53 59 03 09 13 19 | 21 31 41 51 01 11 | 12 22 32 42 52 02 | 16 31 46 01 |
| Sno | U9 BUS | 24 30 34 40 44 50 54 00 04 10 14 20 | 22 32 42 52 02 12 | 13 23 33 43 53 03 | 17 32 47 02 |
| Hz | BUS | 26 32 36 42 46 52 56 02 06 12 16 22 | 24 34 44 54 04 14 | 15 25 35 45 55 05 | 19 34 49 04 |
| Fpo | U7 BUS BUS | 28 34 38 44 48 54 58 04 08 14 18 24 | 26 36 46 56 06 16 | 17 27 37 47 57 07 | 20 35 50 05 |
| Hb | S BUS | 30 36 40 46 50 56 00 06 10 16 20 26 | 28 38 48 58 08 18 | 19 29 39 49 59 09 | 22 37 52 07 |
| Rd | BUS | 31 37 41 47 51 57 01 07 11 17 21 27 | 29 39 49 59 09 19 | 20 30 40 50 00 10 | 24 39 54 09 |
| Bt | BUS | 33 39 43 49 53 59 03 09 13 19 23 29 | 31 41 51 01 11 21 | 22 32 42 52 02 12 | 25 40 55 10 |
| Po | | 34 40 44 50 54 00 04 10 14 20 24 30 | 32 42 52 02 12 22 | 23 33 43 53 03 13 | 27 42 57 12 |
| Dd | M X | 36 42 46 52 56 02 06 12 16 22 26 32 | 34 44 54 04 14 24 | 25 35 45 55 05 15 | 28 43 58 13 |
| T | BUS | 38 44 48 54 58 04 08 14 18 24 28 34 | 36 46 56 06 16 26 | 27 37 47 57 07 17 | 30 45 00 15 |
| Os | X BUS BUS | 39 45 49 55 59 05 09 15 19 25 29 35 | 37 47 57 07 17 27 | 28 38 48 58 08 18 | 32 47 02 17 |
| Ot | BUS | 41 47 51 57 01 07 11 17 21 27 31 37 | 39 49 59 09 19 29 | 30 40 50 00 10 20 | 34 49 04 19 |
| K | X BUS | 43 49 53 59 03 09 13 19 23 29 33 39 | 41 51 01 11 21 31 | 32 42 52 02 12 22 | 36 51 06 21 |

| U3 → Warschauer Str. | | (Mo-Fr tagsüber) | (Sa-So) | (früh/abends) | (nachts) |
|---|---|---|---|---|---|
| K | X BUS | 03 07 13 17 23 27 33 37 43 47 53 57 | 05 15 25 35 45 55 | 06 16 26 36 46 56 | 10 25 40 55 |
| Ot | BUS | 05 09 15 19 25 29 35 39 45 49 55 59 | 07 17 27 37 47 57 | 08 18 28 38 48 58 | 12 27 42 57 |
| Os | X BUS BUS | 07 11 17 21 27 31 37 41 47 51 57 01 | 09 19 29 39 49 59 | 10 20 30 40 50 00 | 14 29 44 59 |
| T | BUS | 09 13 19 23 29 33 39 43 49 53 59 03 | 11 21 31 41 51 01 | 12 22 32 42 52 02 | 15 30 45 00 |
| Dd | M X | 11 15 21 25 31 35 41 45 51 55 01 05 | 13 23 33 43 53 03 | 14 24 34 44 54 04 | 17 32 47 02 |
| Po | | 12 16 22 26 32 36 42 46 52 56 02 06 | 14 24 34 44 54 04 | 15 25 35 45 55 05 | 19 34 49 04 |
| Bt | BUS | 14 18 24 28 34 38 44 48 54 58 04 08 | 16 26 36 46 56 06 | 17 27 37 47 57 07 | 20 35 50 05 |
| Rd | BUS | 15 19 25 29 35 39 45 49 55 59 05 09 | 17 27 37 47 57 07 | 18 28 38 48 58 08 | 22 37 52 07 |
| Hb | S BUS | 17 21 27 31 37 41 47 51 57 01 07 11 | 19 29 39 49 59 09 | 20 30 40 50 00 10 | 23 38 53 08 |
| Fpo | U7 BUS BUS | 19 23 29 33 39 43 49 53 59 03 09 13 | 21 31 41 51 01 11 | 22 32 42 52 02 12 | 25 40 55 10 |
| Hz | BUS | 20 24 30 34 40 44 50 54 00 04 10 14 | 22 32 42 52 02 12 | 23 33 43 53 03 13 | 27 42 57 12 |
| Sno | U9 BUS | 22 26 32 36 42 46 52 56 02 06 12 16 | 24 34 44 54 04 14 | 25 35 45 55 05 15 | 29 44 59 14 |
| Au | | 23 27 33 37 43 47 53 57 03 07 13 17 | 25 35 45 55 05 15 | 26 36 46 56 06 16 | 30 45 00 15 |
| Wt | U1 U2 M BUS | 25 29 35 39 45 49 55 59 05 09 15 19 | 27 37 47 57 07 17 | 28 38 48 58 08 18 | 32 47 02 17 |
| Nm | U1 U2 U4 M BUS BUS | 27 31 37 41 47 51 57 01 07 11 17 21 | 29 39 49 59 09 19 | 30 40 50 00 10 20 | 34 49 04 19 |
| Kus | U1 M BUS | 29 33 39 43 49 53 59 03 09 13 19 23 | 31 41 51 01 11 21 | | |
| Go | U1 U2 | 31 35 41 45 51 55 01 05 11 15 21 25 | 33 43 53 03 13 23 | | |
| Mo | U1 U7 | 32 36 42 46 52 56 02 06 12 16 22 26 | 34 44 54 04 14 24 | | |
| Ho | U1 U6 M BUS BUS | 34 38 44 48 54 58 04 08 14 18 24 28 | 36 46 56 06 16 26 | | |
| Pr | U1 BUS | 36 40 46 50 56 00 06 10 16 20 26 30 | 38 48 58 08 18 28 | | |
| Kbo | U1 U8 BUS | 38 42 48 52 58 02 08 12 18 22 28 32 | 40 50 00 10 20 30 | | |
| Gr | U1 M | 39 43 49 53 59 03 09 13 19 23 29 33 | 41 51 01 11 21 31 | | |
| S | U1 BUS BUS | 41 45 51 55 01 05 11 15 21 25 31 35 | 43 53 03 13 23 33 | | |
| WA | S U1 M BUS BUS | 43 47 53 57 03 07 13 17 23 27 33 37 | 45 55 05 15 25 35 | | |

| U2 → Ruhleben | | (Mo-Fr HVZ) | (Mo-Fr NVZ,Sa-So,Ferien) | (früh/abends) | (nachts) |
|---|---|---|---|---|---|
| PA | S M Tram M X BUS BUS | 03 07 11 15 19 23 27 31 35 39 43 47 51 55 59 | 04 09 14 19 24 29 34 39 44 49 54 59 | 04 14 24 34 44 54 | 09 24 39 54 |
| VIN | M Tram BUS | 04 08 12 16 20 24 28 32 36 40 44 48 52 56 00 | 05 10 15 20 25 30 35 40 45 50 55 00 | 06 16 26 36 46 56 | 11 26 41 56 |
| Sh | S M | 06 10 14 18 22 26 30 34 38 42 46 50 54 58 02 | 07 12 17 22 27 32 37 42 47 52 57 02 | 08 18 28 38 48 58 | 13 28 43 58 |
| EB | M Tram | 08 12 16 20 24 28 32 36 40 44 48 52 56 00 04 | 09 14 19 24 29 34 39 44 49 54 59 04 | 10 20 30 40 50 00 | 15 30 45 00 |
| Sz | | 10 14 18 22 26 30 34 38 42 46 50 54 58 02 06 | 11 16 21 26 31 36 41 46 51 56 01 06 | 12 22 32 42 52 02 | 17 32 47 02 |
| Lu | M BUS | 12 16 20 24 28 32 36 40 44 48 52 56 00 04 08 | 13 18 23 28 33 38 43 48 53 58 03 08 | 13 23 33 43 53 03 | 18 33 48 03 |
| A | Bahn S U5 U8 M M X BUS BUS | 14 18 22 26 30 34 38 42 46 50 54 58 02 06 10 | 15 20 25 30 35 40 45 50 55 00 05 10 | 15 25 35 45 55 05 | 20 35 50 05 |
| Ko | | 16 20 24 28 32 36 40 44 48 52 56 00 04 08 12 | 17 22 27 32 37 42 47 52 57 02 07 12 | 17 27 37 47 57 07 | 22 37 52 07 |
| Mk | BUS | 17 21 25 29 33 37 41 45 49 53 57 01 05 09 13 | 18 23 28 33 38 43 48 53 58 03 08 13 | 19 29 39 49 59 09 | 24 39 54 09 |
| Sp | M BUS BUS | 19 23 27 31 35 39 43 47 51 55 59 03 07 11 15 | 20 25 30 35 40 45 50 55 00 05 10 15 | 20 30 40 50 00 10 | 25 40 55 10 |
| Hv | | 21 25 29 33 37 41 45 49 53 57 01 05 09 13 17 | 22 27 32 37 42 47 52 57 02 07 12 17 | 22 32 42 52 02 12 | 27 42 57 12 |
| Mi | U6 M BUS | 23 27 31 35 39 43 47 51 55 59 03 07 11 15 19 | 24 29 34 39 44 49 54 59 04 09 14 19 | 24 34 44 54 04 14 | 29 44 59 14 |
| MH | M BUS | 24 28 32 36 40 44 48 52 56 00 04 08 12 16 20 | 25 30 35 40 45 50 55 00 05 10 15 20 | 25 35 45 55 05 15 | 30 45 00 15 |
| Pd | Bahn S M BUS | 25 29 33 37 41 45 49 53 57 01 05 09 13 17 21 | 26 31 36 41 46 51 56 01 06 11 16 21 | 27 37 47 57 07 17 | 32 47 02 17 |
| MB | M | 27 31 35 39 43 47 51 55 59 03 07 11 15 19 23 | 28 33 38 43 48 53 58 03 08 13 18 23 | 28 38 48 58 08 18 | 33 48 03 18 |
| Gu | U1 U3 | 28 32 36 40 44 48 52 56 00 04 08 12 16 20 24 | 29 34 39 44 49 54 59 04 09 14 19 24 | 30 40 50 00 10 20 | 35 50 05 20 |
| Bs | M BUS | 30 34 38 42 46 50 54 58 02 06 10 14 18 22 26 | 31 36 41 46 51 56 01 06 11 16 21 26 | 32 42 52 02 12 22 | 37 52 07 22 |
| No | U1 U3 U4 M BUS BUS | 32 36 40 44 48 52 56 00 04 08 12 16 20 24 28 | 33 38 43 48 53 58 03 08 13 18 23 28 | 33 43 53 03 13 23 | 38 53 08 23 |
| Wt | U1 U3 M BUS | 33 37 41 45 49 53 57 01 05 09 13 17 21 25 29 | 34 39 44 49 54 59 04 09 14 19 24 29 | 35 45 55 05 15 25 | 40 55 10 25 |
| Zo | Bahn S U9 M X BUS BUS | 36 40 44 48 52 56 00 04 08 12 16 20 24 28 32 | 37 42 47 52 57 02 07 12 17 22 27 32 | 38 48 58 08 18 28 | 43 58 13 28 |
| Zo | Bahn S U9 M X BUS BUS | 36 40 44 48 52 56 00 04 08 12 16 20 24 28 32 | 37 42 47 52 57 02 07 12 17 22 27 32 | 38 48 58 08 18 28 | 45 00 15 30 |
| RP | M X BUS | 37 41 45 49 53 57 01 05 09 13 17 21 25 29 33 | 38 43 48 53 58 03 08 13 18 23 28 33 | 39 49 59 09 19 29 | 46 01 16 31 |
| Obi | | 39 43 47 51 55 59 03 07 11 15 19 23 27 31 35 | 40 45 50 55 00 05 10 15 20 25 30 35 | 41 51 01 11 21 31 | 48 03 18 33 |
| Bmo | U7 | 40 44 48 52 56 00 04 08 12 16 20 24 28 32 36 | 41 46 51 56 01 06 11 16 21 26 31 36 | 42 52 02 12 22 32 | 49 04 19 34 |
| So | BUS | 42 46 50 54 58 02 06 10 14 18 22 26 30 34 38 | 43 48 53 58 03 08 13 18 23 28 33 38 | 44 54 04 14 24 34 | 51 06 21 36 |
| Kd | S BUS | 43 47 51 55 59 03 07 11 15 19 23 27 31 35 39 | 44 49 54 59 04 09 14 19 24 29 34 39 | 45 55 05 15 25 35 | 52 07 22 37 |
| Th | M X BUS BUS | 45 49 53 57 01 05 09 13 17 21 25 29 33 37 41 | 46 51 56 01 06 11 16 21 26 31 36 41 | 47 57 07 17 27 37 | 54 09 24 39 |
| Nd/u | BUS | 51 59 03 11 19 27 35 43 | 53 03 13 23 33 43 | 49 59 09 19 29 39 | 56 11 26 41 |
| Nd/g | BUS | 47 55 07 15 23 31 39 | 53 03 13 23 33 43 | 49 59 09 19 29 39 | 56 11 26 41 |
| Sd/u | | 52 04 12 20 28 36 44 | 54 04 14 24 34 44 | 50 00 10 20 30 40 | 57 12 27 42 |
| Sd/g | | 48 56 00 08 16 24 32 40 | 54 04 14 24 34 44 | 50 00 10 20 30 40 | 57 12 27 42 |
| Rl/u | M BUS | 54 06 14 22 30 38 46 | 56 06 16 26 36 46 | 52 02 12 22 32 42 | 59 14 29 44 |
| Rl/g | M BUS | 50 58 02 10 18 26 34 42 | 56 06 16 26 36 46 | 52 02 12 22 32 42 | 59 14 29 44 |

| U2 → Pankow | | (Mo-Fr HVZ) | (Mo-Fr NVZ,Sa-So,Ferien) | (früh/abends) | (nachts) |
|---|---|---|---|---|---|
| Rl/u | M Bus | 03 11 19 27 35 43 51 59 | 03 13 23 33 43 53 | 03 13 23 33 43 53 | 13 28 43 58 |
| Rl/g | M Bus | 07 15 23 31 39 47 55 | 03 13 23 33 43 53 | 03 13 23 33 43 53 | 13 28 43 58 |
| Sd/u | | 05 13 21 29 37 45 53 | 05 15 25 35 45 55 | 05 15 25 35 45 55 | 15 30 45 00 |
| Sd/g | | 09 17 25 33 41 49 57 01 | 05 15 25 35 45 55 | 05 15 25 35 45 55 | 15 30 45 00 |
| Nd/u | Bus | 07 15 23 31 39 47 55 | 07 17 27 37 47 57 | 06 16 26 36 46 56 | 16 31 46 01 |
| Nd/g | Bus | 11 19 27 35 43 51 59 03 | 07 17 27 37 47 57 | 06 16 26 36 46 56 | 16 31 46 01 |
| Th | M X Bus Bus | 09 13 17 21 25 29 33 37 41 45 49 53 57 01 05 | 04 09 14 19 24 29 34 39 44 49 54 59 | 08 18 28 38 48 58 | 18 33 48 03 |
| Kd | S Bus | 10 14 18 22 26 30 34 38 42 46 50 54 58 02 06 | 05 10 15 20 25 30 35 40 45 50 55 00 | 10 20 30 40 50 00 | 20 35 50 05 |
| So | Bus | 12 16 20 24 28 32 36 40 44 48 52 56 00 04 08 | 07 12 17 22 27 32 37 42 47 52 57 02 | 11 21 31 41 51 01 | 21 36 51 06 |
| Bmo | U7 | 13 17 21 25 29 33 37 41 45 49 53 57 01 05 09 | 08 13 18 23 28 33 38 43 48 53 58 03 | 13 23 33 43 53 03 | 23 38 53 08 |
| Obi | | 14 18 22 26 30 34 38 42 46 50 54 58 02 06 10 | 09 14 19 24 29 34 39 44 49 54 59 04 | 14 24 34 44 54 04 | 24 39 54 09 |
| RP | M X Bus | 16 20 24 28 32 36 40 44 48 52 56 00 04 08 12 | 11 16 21 26 31 36 41 46 51 56 01 06 | 16 26 36 46 56 06 | 26 41 56 11 |
| Zo | Bahn S U9 M X Bus Bus | 18 22 26 30 34 38 42 46 50 54 58 02 06 10 14 | 13 18 23 28 33 38 43 48 53 58 03 08 | 18 28 38 48 58 08 | 28 43 58 13 |
| Zo | Bahn S U9 M X Bus Bus | 18 22 26 30 34 38 42 46 50 54 58 02 06 10 14 | 13 18 23 28 33 38 43 48 53 58 03 08 | 18 28 38 48 58 08 | 30 45 00 15 |
| Wt | U1 U3 M Bus | 20 24 28 32 36 40 44 48 52 56 00 04 08 12 16 | 15 20 25 30 35 40 45 50 55 00 05 10 | 21 31 41 51 01 11 | 32 47 02 17 |
| No | U1 U3 U4 M Bus Bus | 22 26 30 34 38 42 46 50 54 58 02 06 10 14 18 | 17 22 27 32 37 42 47 52 57 02 07 12 | 22 32 42 52 02 12 | 33 48 03 18 |
| Bs | M Bus | 23 27 31 35 39 43 47 51 55 59 03 07 11 15 19 | 18 23 28 33 38 43 48 53 58 03 08 13 | 24 34 44 54 04 14 | 35 50 05 20 |
| Gu | U1 U3 | 25 29 33 37 41 45 49 53 57 01 05 09 13 17 21 | 20 25 30 35 40 45 50 55 00 05 10 15 | 26 36 46 56 06 16 | 37 52 07 22 |
| MB | M | 27 31 35 39 43 47 51 55 59 03 07 11 15 19 23 | 22 27 32 37 42 47 52 57 02 07 12 17 | 27 37 47 57 07 17 | 38 53 08 23 |
| Pd | Bahn S M Bus | 28 32 36 40 44 48 52 56 00 04 08 12 16 20 24 | 23 28 33 38 43 48 53 58 03 08 13 18 | 29 39 49 59 09 19 | 40 55 10 25 |
| MH | M Bus | 30 34 38 42 46 50 54 58 02 06 10 14 18 22 26 | 25 30 35 40 45 50 55 00 05 10 15 20 | 30 40 50 00 10 20 | 41 56 11 26 |
| Mi | U6 M Bus | 31 35 39 43 47 51 55 59 03 07 11 15 19 23 27 | 26 31 36 41 46 51 56 01 06 11 16 21 | 31 41 51 01 11 21 | 42 57 12 27 |
| Hv | | 32 36 40 44 48 52 56 00 04 08 12 16 20 24 28 | 27 32 37 42 47 52 57 02 07 12 17 22 | 33 43 53 03 13 23 | 44 59 14 29 |
| Sp | M Bus Bus | 34 38 42 46 50 54 58 02 06 10 14 18 22 26 30 | 29 34 39 44 49 54 59 04 09 14 19 24 | 34 44 54 04 14 24 | 45 00 15 30 |
| Mk | Bus | 35 39 43 47 51 55 59 03 07 11 15 19 23 27 31 | 30 35 40 45 50 55 00 05 10 15 20 25 | 35 45 55 05 15 25 | 46 01 16 31 |
| Ko | | 36 40 44 48 52 56 00 04 08 12 16 20 24 28 32 | 31 36 41 46 51 56 01 06 11 16 21 26 | 37 47 57 07 17 27 | 48 03 18 33 |
| A | Bahn S U5 U8 M M X Bus Bus | 38 42 46 50 54 58 02 06 10 14 18 22 26 30 34 | 33 38 43 48 53 58 03 08 13 18 23 28 | 39 49 59 09 19 29 | 50 05 20 35 |
| Lu | M Bus | 40 44 48 52 56 00 04 08 12 16 20 24 28 32 36 | 35 40 45 50 55 00 05 10 15 20 25 30 | 41 51 01 11 21 31 | 52 07 22 37 |
| Sz | | 42 46 50 54 58 02 06 10 14 18 22 26 30 34 38 | 37 42 47 52 57 02 07 12 17 22 27 32 | 42 52 02 12 22 32 | 53 08 23 38 |
| EB | M Tram | 44 48 52 56 00 04 08 12 16 20 24 28 32 36 40 | 39 44 49 54 59 04 09 14 19 24 29 34 | 44 54 04 14 24 34 | 55 10 25 40 |
| Sh | S M | 46 50 54 58 02 06 10 14 18 22 26 30 34 38 42 | 41 46 51 56 01 06 11 16 21 26 31 36 | 46 56 06 16 26 36 | 57 12 27 42 |
| VIN | M Tram Bus | 48 52 56 00 04 08 12 16 20 24 28 32 36 40 44 | 43 48 53 58 03 08 13 18 23 28 33 38 | 49 59 09 19 29 39 | 00 15 30 45 |
| PA | S M Tram M X Bus Bus | 50 54 58 02 06 10 14 18 22 26 30 34 38 42 46 | 45 50 55 00 05 10 15 20 25 30 35 40 | 50 00 10 20 30 40 | 01 16 31 46 |

| U5 → Alexanderplatz | | (Mo-Fr HVZ) | (Mo-Fr NVZ) | (früh/abends) | (nachts) |
|---|---|---|---|---|---|
| Hö | Bus | 00 – alle 4-5 min | 05 15 25 35 45 55 | 05 15 25 35 45 55 | 05 20 35 50 |
| LL | Bus | 02 – alle 4-5 min | 07 17 27 37 47 57 | 07 17 27 37 47 57 | 07 22 37 52 |
| Hd | M Tram X Bus | 04 – alle 4-5 min | 09 19 29 39 49 59 | 09 19 29 39 49 59 | 09 24 39 54 |
| C | Bus | 05 – alle 4-5 min | 10 20 30 40 50 00 | 10 20 30 40 50 00 | 10 25 40 55 |
| GK | Bus | 07 – alle 4-5 min | 12 22 32 42 52 02 | 12 22 32 42 52 02 | 12 27 42 57 |
| KL | Bus Bus | 08 – alle 4-5 min | 08 13 18 23 28 33 38 43 48 53 58 03 | 13 23 33 43 53 03 | 13 28 43 58 |
| Wh | S Bus Bus | 11 – alle 4-5 min | 11 16 21 26 31 36 41 46 51 56 01 06 | 16 26 36 46 56 06 | 16 31 46 01 |
| E | X Bus Bus | 13 – alle 4-5 min | 13 18 23 28 33 38 43 48 53 58 03 08 | 18 28 38 48 58 08 | 18 33 48 03 |
| Bü | | 15 – alle 4-5 min | 15 20 25 30 35 40 45 50 55 00 05 10 | 20 30 40 50 00 10 | 20 35 50 05 |
| Tk | M Tram Bus Bus | 17 – alle 4-5 min | 17 22 27 32 37 42 47 52 57 02 07 12 | 22 32 42 52 02 12 | 23 38 53 08 |
| Fi | Bus Bus | 19 – alle 4-5 min | 19 24 29 34 39 44 49 54 59 04 09 14 | 24 34 44 54 04 14 | 25 40 55 10 |
| Li | Bahn S Tram Bus Bus | 21 – alle 4-5 min | 22 27 32 37 42 47 52 57 02 07 12 17 | 27 37 47 57 07 17 | 27 42 57 12 |
| Md | Bus Bus | 23 – alle 4-5 min | 23 28 33 38 43 48 53 58 03 08 13 18 | 28 38 48 58 08 18 | 28 43 58 13 |
| Ff | S M Tram | 24 – alle 4-5 min | 25 30 35 40 45 50 55 00 05 10 15 20 | 30 40 50 00 10 20 | 30 45 00 15 |
| Sa | | 26 – alle 4-5 min | 27 32 37 42 47 52 57 02 07 12 17 22 | 32 42 52 02 12 22 | 31 46 01 16 |
| Ft | M Tram | 27 – alle 4-5 min | 28 33 38 43 48 53 58 03 08 13 18 23 | 33 43 53 03 13 23 | 33 48 03 18 |
| WR | Bus | 28 – alle 4-5 min | 29 34 39 44 49 54 59 04 09 14 19 24 | 34 44 54 04 14 24 | 34 49 04 19 |
| Sr | Bus | 30 – alle 4-5 min | 31 36 41 46 51 56 01 06 11 16 21 26 | 36 46 56 06 16 26 | 35 50 05 20 |
| Si | | 31 – alle 4-5 min | 32 37 42 47 52 57 02 07 12 17 22 27 | 37 47 57 07 17 27 | 37 52 07 22 |
| Al | Bahn S U2 U8 M M X Bus Bus | 33 – alle 4-5 min | 34 39 44 49 54 59 04 09 14 19 24 29 | 39 49 59 09 19 29 | 38 53 08 23 |

| U5 → Hönow | | (Mo-Fr HVZ) | (Mo-Fr NVZ) | (früh/abends) | (nachts) |
|---|---|---|---|---|---|
| Al | Bahn S U2 U8 M M X Bus Bus | 00 – alle 4-5 min | 00 05 10 15 20 25 30 35 40 45 50 55 | 05 15 25 35 45 55 | 05 20 35 50 |
| Si | | 02 – alle 4-5 min | 02 07 12 17 22 27 32 37 42 47 52 57 | 07 17 27 37 47 57 | 07 22 37 52 |
| Sr | Bus | 04 – alle 4-5 min | 04 09 14 19 24 29 34 39 44 49 54 59 | 09 19 29 39 49 59 | 08 23 38 53 |
| WR | Bus | 05 – alle 4-5 min | 05 10 15 20 25 30 35 40 45 50 55 00 | 10 20 30 40 50 00 | 10 25 40 55 |
| Ft | M Tram | 06 – alle 4-5 min | 06 11 16 21 26 31 36 41 46 51 56 01 | 11 21 31 41 51 01 | 11 26 41 56 |
| Sa | | 08 – alle 4-5 min | 08 13 18 23 28 33 38 43 48 53 58 03 | 13 23 33 43 53 03 | 12 27 42 57 |
| Ff | S M Tram | 09 – alle 4-5 min | 10 15 20 25 30 35 40 45 50 55 00 05 | 15 25 35 45 55 05 | 14 29 44 59 |
| Md | Bus Bus | 11 – alle 4-5 min | 11 16 21 26 31 36 41 46 51 56 01 06 | 16 26 36 46 56 06 | 15 30 45 00 |
| Li | Bahn S Tram Bus Bus | 12 – alle 4-5 min | 13 18 23 28 33 38 43 48 53 58 03 08 | 18 28 38 48 58 08 | 17 32 47 02 |
| Fi | Bus Bus | 14 – alle 4-5 min | 15 20 25 30 35 40 45 50 55 00 05 10 | 20 30 40 50 00 10 | 19 34 49 04 |
| Tk | M Tram Bus Bus | 16 – alle 4-5 min | 17 22 27 32 37 42 47 52 57 02 07 12 | 22 32 42 52 02 12 | 21 36 51 06 |
| Bü | | 19 – alle 4-5 min | 20 25 30 35 40 45 50 55 00 05 10 15 | 25 35 45 55 05 15 | 23 38 53 08 |
| E | X Bus Bus | 21 – alle 4-5 min | 22 27 32 37 42 47 52 57 02 07 12 17 | 27 37 47 57 07 17 | 25 40 55 10 |
| Wh | S Bus Bus | 23 – alle 4-5 min | 24 29 34 39 44 49 54 59 04 09 14 19 | 29 39 49 59 09 19 | 28 43 58 13 |
| KL | Bus Bus | 25 – alle 4-5 min | 26 31 36 41 46 51 56 01 06 11 16 21 | 31 41 51 01 11 21 | 30 45 00 15 |
| GK | Bus | 27 – alle 4-5 min | 33 43 53 03 13 23 | 33 43 53 03 13 23 | 32 47 02 17 |
| C | Bus | 28 – alle 4-5 min | 34 44 54 04 14 24 | 34 44 54 04 14 24 | 33 48 03 18 |
| Hd | M Tram X Bus | 30 – alle 4-5 min | 36 46 56 06 16 26 | 36 46 56 06 16 26 | 35 50 05 20 |
| LL | Bus | 31 – alle 4-5 min | 37 47 57 07 17 27 | 37 47 57 07 17 27 | 36 51 06 21 |
| Hö | Bus | 33 – alle 4-5 min | 39 49 59 09 19 29 | 39 49 59 09 19 29 | 38 53 08 23 |

| U4 → Innsbrucker Pl. | | (Mo-Sa HVZ) | (NVZ) |
|---|---|---|---|
| Nm | U1 U2 U3 M Bus Bus | 00 05 10 15 20 25 30 35 40 45 50 55 | 06 16 26 36 46 56 |
| V | | 02 07 12 17 22 27 32 37 42 47 52 57 | 08 18 28 38 48 58 |
| Bpo | U7 | 03 08 13 18 23 28 33 38 43 48 53 58 | 09 19 29 39 49 59 |
| RS | M Bus Bus | 05 10 15 20 25 30 35 40 45 50 55 00 | 11 21 31 41 51 01 |
| Ip | S M Bus | 06 11 16 21 26 31 36 41 46 51 56 01 | 12 22 32 42 52 02 |

| U4 → Nollendorfplatz | | (Mo-Sa HVZ) | (NVZ) |
|---|---|---|---|
| Ip | S M Bus | 01 06 11 16 21 26 31 36 41 46 51 56 | 06 16 26 36 46 56 |
| RS | M Bus Bus | 02 07 12 17 22 27 32 37 42 47 52 57 | 07 17 27 37 47 57 |
| Bpo | U7 | 03 08 13 18 23 28 33 38 43 48 53 58 | 08 18 28 38 48 58 |
| V | | 05 10 15 20 25 30 35 40 45 50 55 00 | 10 20 30 40 50 00 |
| Nm | U1 U2 U3 M Bus Bus | 07 12 17 22 27 32 37 42 47 52 57 02 | 12 22 32 42 52 02 |

| U55 → Hauptbahnhof (täglich) | | |
|---|---|---|
| BRT | S X Bus | 00 10 20 30 40 50 |
| BUN | | 01 11 21 31 41 51 |
| HBF | DB Bahn S M M X Bus Bus | 02 12 22 32 42 52 |

| U55 → Brandenburger Tor (täglich) | | |
|---|---|---|
| HBF | DB Bahn S M M X Bus Bus | 05 15 25 35 45 55 |
| BUN | | 06 16 26 36 46 56 |
| BRT | S X Bus | 07 17 27 37 47 57 |

| U6 → Mariendorf | | (Mo-Fr HVZ) | (Mo-Fr NVZ) | (früh/abends) | (nachts) |
|---|---|---|---|---|---|
| Tg | Bus Bus | 00 – alle 4-5 min | 02 07 12 17 22 27 32 37 42 47 52 57 | 03 13 23 33 43 53 | 05 20 35 50 |
| Bk | Bus | 01 – alle 4-5 min | 03 08 13 18 23 28 33 38 43 48 53 58 | 05 15 25 35 45 55 | 07 22 37 52 |
| Hh | X Bus Bus | 03 – alle 4-5 min | 05 10 15 20 25 30 35 40 45 50 55 00 | 06 16 26 36 46 56 | 08 23 38 53 |
| OTI | | 04 – alle 4-5 min | 06 11 16 21 26 31 36 41 46 51 56 01 | 07 17 27 37 47 57 | 09 24 39 54 |
| Scha | Bus | 05 – alle 4-5 min | 07 12 17 22 27 32 37 42 47 52 57 02 | 09 19 29 39 49 59 | 11 26 41 56 |
| Sch | M X Bus | 07 – alle 4-5 min | 09 14 19 24 29 34 39 44 49 54 59 04 | 10 20 30 40 50 00 | 12 27 42 57 |
| Afr | Bus | 08 – alle 4-5 min | 10 15 20 25 30 35 40 45 50 55 00 05 | 12 22 32 42 52 02 | 14 29 44 59 |
| Rb | | 09 – alle 4-5 min | 11 16 21 26 31 36 41 46 51 56 01 06 | 13 23 33 43 53 03 | 15 30 45 00 |
| Se | M Tram Bus Bus | 11 – alle 4-5 min | 13 18 23 28 33 38 43 48 53 58 03 08 | 15 25 35 45 55 05 | 17 32 47 02 |
| Lpo | U9 Bus Bus | 13 – alle 4-5 min | 15 20 25 30 35 40 45 50 55 00 05 10 | 16 26 36 46 56 06 | 20 35 50 05 |
| We | S M Bus Bus | 14 – alle 4-5 min | 16 21 26 31 36 41 46 51 56 01 06 11 | 17 27 37 47 57 07 | 21 36 51 06 |
| Ri | M Bus Bus | 15 – alle 4-5 min | 17 22 27 32 37 42 47 52 57 02 07 12 | 18 28 38 48 58 08 | 22 37 52 07 |
| Sk | | 16 – alle 4-5 min | 18 23 28 33 38 43 48 53 58 03 08 13 | 20 30 40 50 00 10 | 23 38 53 08 |
| NA | M Tram Bus | 17 – alle 4-5 min | 19 24 29 34 39 44 49 54 59 04 09 14 | 21 31 41 51 01 11 | 24 39 54 09 |
| Ob | M Tram | 19 – alle 4-5 min | 21 26 31 36 41 46 51 56 01 06 11 16 | 22 32 42 52 02 12 | 26 41 56 11 |
| F | Bahn S M Tram Bus | 20 – alle 4-5 min | 22 27 32 37 42 47 52 57 02 07 12 17 | 24 34 44 54 04 14 | 27 42 57 12 |
| Fr | Bus | 21 – alle 4-5 min | 23 28 33 38 43 48 53 58 03 08 13 18 | 25 35 45 55 05 15 | 28 43 58 13 |
| Mic | U2 M Bus | 23 – alle 4-5 min | 25 30 35 40 45 50 55 00 05 10 15 20 | 26 36 46 56 06 16 | 30 45 00 15 |
| Ks | M | 24 – alle 4-5 min | 26 31 36 41 46 51 56 01 06 11 16 21 | 27 37 47 57 07 17 | 31 46 01 16 |
| Hu | U1 U3 M Bus Bus | 25 – alle 4-5 min | 27 32 37 42 47 52 57 02 07 12 17 22 | 29 39 49 59 09 19 | 32 47 02 17 |
| Me | U7 M Bus Bus | 27 – alle 4-5 min | 29 34 39 44 49 54 59 04 09 14 19 24 | 31 41 51 01 11 21 | 34 49 04 19 |
| PL | Bus Bus | 29 – alle 4-5 min | 31 36 41 46 51 56 01 06 11 16 21 26 | 33 43 53 03 13 23 | 36 51 06 21 |
| Ps | | 30 – alle 4-5 min | 32 37 42 47 52 57 02 07 12 17 22 27 | 34 44 54 04 14 24 | 37 52 07 22 |
| Ts | S Bus Bus | 32 – alle 4-5 min | 34 39 44 49 54 59 04 09 14 19 24 29 | 36 46 56 06 16 26 | 39 54 09 24 |
| At | M Bus Bus | 33 – alle 4-5 min | 35 40 45 50 55 00 05 10 15 20 25 30 | 37 47 57 07 17 27 | 40 55 10 25 |
| Ka | Bus | 34 – alle 4-5 min | 36 41 46 51 56 01 06 11 16 21 26 31 | 38 48 58 08 18 28 | 41 56 11 26 |
| Ull | Bus | 35 – alle 4-5 min | 37 42 47 52 57 02 07 12 17 22 27 32 | 39 49 59 09 19 29 | 42 57 12 27 |
| Wl | Bus | 37 – alle 4-5 min | 39 44 49 54 59 04 09 14 19 24 29 34 | 41 51 01 11 21 31 | 44 59 14 29 |
| Mf | M X Bus Bus | 38 – alle 4-5 min | 40 45 50 55 00 05 10 15 20 25 30 35 | 42 52 02 12 22 32 | 45 00 15 30 |

| U6 → Tegel | | (Mo-Fr HVZ) | (Mo-Fr NVZ) | (früh/abends) | (nachts) |
|---|---|---|---|---|---|
| Mf | M X Bus Bus | 00 – alle 4-5 min | 01 06 11 16 21 26 31 36 41 46 51 56 | 06 16 26 36 46 56 | 13 28 43 58 |
| Wl | Bus | 01 – alle 4-5 min | 02 07 12 17 22 27 32 37 42 47 52 57 | 07 17 27 37 47 57 | 14 29 44 59 |
| Ull | Bus | 03 – alle 4-5 min | 03 08 13 18 23 28 33 38 43 48 53 58 | 09 19 29 39 49 59 | 15 30 45 00 |
| Ka | Bus | 04 – alle 4-5 min | 05 10 15 20 25 30 35 40 45 50 55 00 | 10 20 30 40 50 00 | 17 32 47 02 |
| At | M Bus Bus | 05 – alle 4-5 min | 06 11 16 21 26 31 36 41 46 51 56 01 | 11 21 31 41 51 01 | 18 33 48 03 |
| Ts | S Bus Bus | 07 – alle 4-5 min | 07 12 17 22 27 32 37 42 47 52 57 02 | 13 23 33 43 53 03 | 19 34 49 04 |
| Ps | | 08 – alle 4-5 min | 09 14 19 24 29 34 39 44 49 54 59 04 | 14 24 34 44 54 04 | 21 36 51 06 |
| PL | Bus Bus | 10 – alle 4-5 min | 10 15 20 25 30 35 40 45 50 55 00 05 | 16 26 36 46 56 06 | 22 37 52 07 |
| Me | U7 M Bus Bus | 12 – alle 4-5 min | 12 17 22 27 32 37 42 47 52 57 02 07 | 18 28 38 48 58 08 | 24 39 54 09 |
| Hu | U1 U3 M Bus Bus | 13 – alle 4-5 min | 14 19 24 29 34 39 44 49 54 59 04 09 | 20 30 40 50 00 10 | 26 41 56 11 |
| Ks | M | 15 – alle 4-5 min | 15 20 25 30 35 40 45 50 55 00 05 10 | 21 31 41 51 01 11 | 27 42 57 12 |
| Mic | U2 M Bus | 16 – alle 4-5 min | 17 22 27 32 37 42 47 52 57 02 07 12 | 23 33 43 53 03 13 | 29 44 59 14 |
| Fr | Bus | 17 – alle 4-5 min | 18 23 28 33 38 43 48 53 58 03 08 13 | 24 34 44 54 04 14 | 30 45 00 15 |
| F | Bahn S M Tram Bus | 19 – alle 4-5 min | 19 24 29 34 39 44 49 54 59 04 09 14 | 25 35 45 55 05 15 | 31 46 01 16 |
| Ob | M Tram | 20 – alle 4-5 min | 20 25 30 35 40 45 50 55 00 05 10 15 | 26 36 46 56 06 16 | 32 47 02 17 |
| NA | M Tram Bus | 21 – alle 4-5 min | 22 27 32 37 42 47 52 57 02 07 12 17 | 28 38 48 58 08 18 | 34 49 04 19 |
| Sk | | 22 – alle 4-5 min | 23 28 33 38 43 48 53 58 03 08 13 18 | 29 39 49 59 09 19 | 35 50 05 20 |
| Ri | M Bus Bus | 24 – alle 4-5 min | 24 29 34 39 44 49 54 59 04 09 14 19 | 30 40 50 00 10 20 | 36 51 06 21 |
| We | S M Bus Bus | 25 – alle 4-5 min | 25 30 35 40 45 50 55 00 05 10 15 20 | 31 41 51 01 11 21 | 37 52 07 22 |
| Lpo | U9 Bus Bus | 26 – alle 4-5 min | 27 32 37 42 47 52 57 02 07 12 17 22 | 35 45 55 05 15 25 | 40 55 10 25 |
| Se | M Tram Bus Bus | 27 – alle 4-5 min | 28 33 38 43 48 53 58 03 08 13 18 23 | 36 46 56 06 16 26 | 41 56 11 26 |
| Rb | | 29 – alle 4-5 min | 30 35 40 45 50 55 00 05 10 15 20 25 | 38 48 58 08 18 28 | 43 58 13 28 |
| Afr | Bus | 30 – alle 4-5 min | 31 36 41 46 51 56 01 06 11 16 21 26 | 39 49 59 09 19 29 | 45 00 15 30 |
| Sch | M X Bus | 31 – alle 4-5 min | 32 37 42 47 52 57 02 07 12 17 22 27 | 40 50 00 10 20 30 | 46 01 16 31 |
| Scha | Bus | 33 – alle 4-5 min | 34 39 44 49 54 59 04 09 14 19 24 29 | 42 52 02 12 22 32 | 47 02 17 32 |
| OTI | | 34 – alle 4-5 min | 35 40 45 50 55 00 05 10 15 20 25 30 | 43 53 03 13 23 33 | 49 04 19 34 |
| Hh | X Bus Bus | 35 – alle 4-5 min | 36 41 46 51 56 01 06 11 16 21 26 31 | 44 54 04 14 24 34 | 50 05 20 35 |
| Bk | Bus | 37 – alle 4-5 min | 38 43 48 53 58 03 08 13 18 23 28 33 | 46 56 06 16 26 36 | 51 06 21 36 |
| Tg | Bus Bus | 38 – alle 4-5 min | 39 44 49 54 59 04 09 14 19 24 29 34 | 47 57 07 17 27 37 | 53 08 23 38 |

| U8 → Hermannstr. (Mo-Fr HVZ) | | | (Mo-Fr NVZ) | | | | | | (früh/abends) | | | (nachts) | |
|---|---|---|---|---|---|---|---|---|---|---|---|---|---|
| WIU | S M X RB | 01 06 11 16 21 26 31 36 41 46 51 56 | 06 | 16 | 26 | 36 | 46 | 56 | 08 18 28 38 48 58 | 04 19 34 49 |
| RR | X RB | 03 08 13 18 23 28 33 38 43 48 53 58 | 08 | 18 | 28 | 38 | 48 | 58 | 09 19 29 39 49 59 | 05 20 35 50 |
| KB | S M X | 05 10 15 20 25 30 35 40 45 50 55 00 | 10 | 20 | 30 | 40 | 50 | 00 | 11 21 31 41 51 01 | 07 22 37 52 |
| LD | RB | 06 11 16 21 26 31 36 41 46 51 56 01 | 11 | 21 | 31 | 41 | 51 | 01 | 13 23 33 43 53 03 | 09 24 39 54 |
| PB | RB RB | 07 12 17 22 27 32 37 42 47 52 57 02 | 07 12 17 22 27 32 37 42 47 52 57 02 | 14 24 34 44 54 04 | 10 25 40 55 |
| RE | RB | 09 14 19 24 29 34 39 44 49 54 59 04 | 09 14 19 24 29 34 39 44 49 54 59 04 | 15 25 35 45 55 05 | 11 26 41 56 |
| FN | RB | 10 15 20 25 30 35 40 45 50 55 00 05 | 10 15 20 25 30 35 40 45 50 55 00 05 | 17 27 37 47 57 07 | 13 28 43 58 |
| Olu | U9 M Tram RB RB | 12 17 22 27 32 37 42 47 52 57 02 07 | 12 17 22 27 32 37 42 47 52 57 02 07 | 19 29 39 49 59 09 | 15 30 45 00 |
| Pk | M | 14 19 24 29 34 39 44 49 54 59 04 09 | 14 19 24 29 34 39 44 49 54 59 04 09 | 20 30 40 50 00 10 | 16 31 46 01 |
| Gb | DB S RB | 15 20 25 30 35 40 45 50 55 00 05 10 | 15 20 25 30 35 40 45 50 55 00 05 10 | 22 32 42 52 02 12 | 18 33 48 03 |
| Vo | RB | 17 22 27 32 37 42 47 52 57 02 07 12 | 17 22 27 32 37 42 47 52 57 02 07 12 | 23 33 43 53 03 13 | 19 34 49 04 |
| B | M RB | 18 23 28 33 38 43 48 53 58 03 08 13 | 18 23 28 33 38 43 48 53 58 03 08 13 | 25 35 45 55 05 15 | 21 36 51 06 |
| Ro | M RB | 20 25 30 35 40 45 50 55 00 05 10 15 | 20 25 30 35 40 45 50 55 00 05 10 15 | 26 36 46 56 06 16 | 22 37 52 07 |
| W | RB | 21 26 31 36 41 46 51 56 01 06 11 16 | 21 26 31 36 41 46 51 56 01 06 11 16 | 28 38 48 58 08 18 | 24 39 54 09 |
| Ap | S U2 U5 M M X RB RB | 23 28 33 38 43 48 53 58 03 08 13 18 | 23 28 33 38 43 48 53 58 03 08 13 18 | 30 40 50 00 10 20 | 26 41 56 11 |
| Jn | S RB RB | 25 30 35 40 45 50 55 00 05 10 15 20 | 25 30 35 40 45 50 55 00 05 10 15 20 | 31 41 51 01 11 21 | 27 42 57 12 |
| He | RB RB | 26 31 36 41 46 51 56 01 06 11 16 21 | 26 31 36 41 46 51 56 01 06 11 16 21 | 33 43 53 03 13 23 | 29 44 59 14 |
| Mr | M | 28 33 38 43 48 53 58 03 08 13 18 23 | 28 33 38 43 48 53 58 03 08 13 18 23 | 34 44 54 04 14 24 | 30 45 00 15 |
| Kbu | U1 U3 RB | 30 35 40 45 50 55 00 05 10 15 20 25 | 30 35 40 45 50 55 00 05 10 15 20 25 | 36 46 56 06 16 26 | 34 49 04 19 |
| ST | | 31 36 41 46 51 56 01 06 11 16 21 26 | 31 36 41 46 51 56 01 06 11 16 21 26 | 38 48 58 08 18 28 | 35 50 05 20 |
| Hpo | U7 M RB RB | 33 38 43 48 53 58 03 08 13 18 23 28 | 33 38 43 48 53 58 03 08 13 18 23 28 | 40 50 00 10 20 30 | 40 55 10 25 |
| Bo | RB | 35 40 45 50 55 00 05 10 15 20 25 30 | 35 40 45 50 55 00 05 10 15 20 25 30 | 41 51 01 11 21 31 | 41 56 11 26 |
| L | | 36 41 46 51 56 01 06 11 16 21 26 31 | 36 41 46 51 56 01 06 11 16 21 26 31 | 43 53 03 13 23 33 | 43 58 13 28 |
| HMS | S M RB RB | 37 42 47 52 57 02 07 12 17 22 27 32 | 37 42 47 52 57 02 07 12 17 22 27 32 | 44 54 04 14 24 34 | 44 59 14 29 |

| U8 → Wittenau (Mo-Fr HVZ) | | | (Mo-Fr NVZ) | | | | | | (früh/abends) | | | (nachts) | |
|---|---|---|---|---|---|---|---|---|---|---|---|---|---|
| HMS | S M RB RB | 02 07 12 17 22 27 32 37 42 47 52 57 | 02 07 12 17 22 27 32 37 42 47 52 57 | 02 12 22 32 42 52 | 03 18 33 48 |
| L | | 04 09 14 19 24 29 34 39 44 49 54 59 | 04 09 14 19 24 29 34 39 44 49 54 59 | 04 14 24 34 44 54 | 04 19 34 49 |
| Bo | RB | 05 10 15 20 25 30 35 40 45 50 55 00 | 05 10 15 20 25 30 35 40 45 50 55 00 | 05 15 25 35 45 55 | 06 21 36 51 |
| Hpo | U7 M RB RB | 07 12 17 22 27 32 37 42 47 52 57 02 | 07 12 17 22 27 32 37 42 47 52 57 02 | 07 17 27 37 47 57 | 07 22 37 52 |
| ST | | 09 14 19 24 29 34 39 44 49 54 59 04 | 09 14 19 24 29 34 39 44 49 54 59 04 | 09 19 29 39 49 59 | 09 24 39 54 |
| Kbu | U1 U3 RB | 11 16 21 26 31 36 41 46 51 56 01 06 | 11 16 21 26 31 36 41 46 51 56 01 06 | 11 21 31 41 51 01 | 11 26 41 56 |
| Mr | M | 13 18 23 28 33 38 43 48 53 58 03 08 | 13 18 23 28 33 38 43 48 53 58 03 08 | 13 23 33 43 53 03 | 13 28 43 58 |
| He | RB RB | 14 19 24 29 34 39 44 49 54 59 04 09 | 14 19 24 29 34 39 44 49 54 59 04 09 | 14 24 34 44 54 04 | 15 30 45 00 |
| Jn | S RB RB | 15 20 25 30 35 40 45 50 55 00 05 10 | 15 20 25 30 35 40 45 50 55 00 05 10 | 15 25 35 45 55 05 | 16 31 46 01 |
| Ap | S U2 U5 M M X RB RB | 17 22 27 32 37 42 47 52 57 02 07 12 | 17 22 27 32 37 42 47 52 57 02 07 12 | 17 27 37 47 57 07 | 18 33 48 03 |
| W | RB | 19 24 29 34 39 44 49 54 59 04 09 14 | 19 24 29 34 39 44 49 54 59 04 09 14 | 19 29 39 49 59 09 | 19 34 49 04 |
| Ro | M RB | 20 25 30 35 40 45 50 55 00 05 10 15 | 20 25 30 35 40 45 50 55 00 05 10 15 | 20 30 40 50 00 10 | 21 36 51 06 |
| B | M RB | 22 27 32 37 42 47 52 57 02 07 12 17 | 22 27 32 37 42 47 52 57 02 07 12 17 | 22 32 42 52 02 12 | 22 37 52 07 |
| Vo | RB | 23 28 33 38 43 48 53 58 03 08 13 18 | 23 28 33 38 43 48 53 58 03 08 13 18 | 23 33 43 53 03 13 | 24 39 54 09 |
| Gb | DB S RB | 25 30 35 40 45 50 55 00 05 10 15 20 | 25 30 35 40 45 50 55 00 05 10 15 20 | 25 35 45 55 05 15 | 25 40 55 10 |
| Pk | M | 26 31 36 41 46 51 56 01 06 11 16 21 | 26 31 36 41 46 51 56 01 06 11 16 21 | 26 36 46 56 06 16 | 27 42 57 12 |
| Olu | U9 M Tram RB RB | 28 33 38 43 48 53 58 03 08 13 18 23 | 28 33 38 43 48 53 58 03 08 13 18 23 | 28 38 48 58 08 18 | 28 43 58 13 |
| FN | RB | 30 35 40 45 50 55 00 05 10 15 20 25 | 30 35 40 45 50 55 00 05 10 15 20 25 | 30 40 50 00 10 20 | 30 45 00 15 |
| RE | RB | 31 36 41 46 51 56 01 06 11 16 21 26 | 31 36 41 46 51 56 01 06 11 16 21 26 | 31 41 51 01 11 21 | 31 46 01 16 |
| PB | RB RB | 32 37 42 47 52 57 02 07 12 17 22 27 | 32 37 42 47 52 57 02 07 12 17 22 27 | 32 42 52 02 12 22 | 33 48 03 18 |
| LD | RB | 34 39 44 49 54 59 04 09 14 19 24 29 | 34 44 54 04 14 24 | 34 44 54 04 14 24 | 34 49 04 19 |
| KB | S M X | 35 40 45 50 55 00 05 10 15 20 25 30 | 35 45 55 05 15 25 | 35 45 55 05 15 25 | 35 50 05 20 |
| RR | X RB | 37 42 47 52 57 02 07 12 17 22 27 32 | 37 47 57 07 17 27 | 37 47 57 07 17 27 | 37 52 07 22 |
| WIU | S M X RB RB | 38 43 48 53 58 03 08 13 18 23 28 33 | 38 48 58 08 18 28 | 38 48 58 08 18 28 | 39 54 09 24 |

| U9 → Rath.Steglitz (Mo-Sa HVZ) | | | (Mo-Sa NVZ,So,Ferien) | | | | | | (früh/abends) | | | (nachts) | |
|---|---|---|---|---|---|---|---|---|---|---|---|---|---|
| Olo | U8 M Tram RB RB | 01 05 09 13 17 21 25 29 33 37 41 45 49 53 57 | 01 06 11 16 21 26 31 36 41 46 51 56 | 01 11 21 31 41 51 | 01 16 31 46 |
| Np | RB | 02 06 10 14 18 22 26 30 34 38 42 46 50 54 58 | 02 07 12 17 22 27 32 37 42 47 52 57 | 02 12 22 32 42 52 | 02 17 32 47 |
| Lpu | U6 RB RB | 03 07 11 15 19 23 27 31 35 39 43 47 51 55 59 | 03 08 13 18 23 28 33 38 43 48 53 58 | 03 13 23 33 43 53 | 04 19 34 49 |
| Am | RB | 05 09 13 17 21 25 29 33 37 41 45 49 53 57 01 | 05 10 15 20 25 30 35 40 45 50 55 00 | 05 15 25 35 45 55 | 05 20 35 50 |
| WF | S | 06 10 14 18 22 26 30 34 38 42 46 50 54 58 02 | 06 11 16 21 26 31 36 41 46 51 56 01 | 06 16 26 36 46 56 | 07 22 37 52 |
| Bi | | 07 11 15 19 23 27 31 35 39 43 47 51 55 59 03 | 07 12 17 22 27 32 37 42 47 52 57 02 | 07 17 27 37 47 57 | 08 23 38 53 |
| Tm | M X RB RB | 09 13 17 21 25 29 33 37 41 45 49 53 57 01 05 | 09 14 19 24 29 34 39 44 49 54 59 04 | 09 19 29 39 49 59 | 09 24 39 54 |
| Ha | RB RB | 10 14 18 22 26 30 34 38 42 46 50 54 58 02 06 | 10 15 20 25 30 35 40 45 50 55 00 05 | 10 20 30 40 50 00 | 11 26 41 56 |
| Zu | S U2 M X RB RB | 12 16 20 24 28 32 36 40 44 48 52 56 00 04 08 | 12 17 22 27 32 37 42 47 52 57 02 07 | 12 22 32 42 52 02 | 13 28 43 58 |
| Zu | S U2 M X RB RB | 12 16 20 24 28 32 36 40 44 48 52 56 00 04 08 | 12 17 22 27 32 37 42 47 52 57 02 07 | 12 22 32 42 52 02 | 15 30 45 00 |
| Kfu | U1 M X RB RB | 14 18 22 26 30 34 38 42 46 50 54 58 02 06 10 | 14 19 24 29 34 39 44 49 54 59 04 09 | 14 24 34 44 54 04 | 16 31 46 01 |
| Snu | U3 RB | 15 19 23 27 31 35 39 43 47 51 55 59 03 07 11 | 15 20 25 30 35 40 45 50 55 00 05 10 | 15 25 35 45 55 05 | 17 32 47 02 |
| Gt | | 16 20 24 28 32 36 40 44 48 52 56 00 04 08 12 | 16 21 26 31 36 41 46 51 56 01 06 11 | 16 26 36 46 56 06 | 18 33 48 03 |
| Beo | U7 RB RB | 17 21 25 29 33 37 41 45 49 53 57 01 05 09 13 | 17 22 27 32 37 42 47 52 57 02 07 12 | 17 27 37 47 57 07 | 20 35 50 05 |
| Bu | S RB | 19 23 27 31 35 39 43 47 51 55 59 03 07 11 15 | 19 24 29 34 39 44 49 54 59 04 09 14 | 19 29 39 49 59 09 | 21 36 51 06 |
| Fw | RB | 20 24 28 32 36 40 44 48 52 56 00 04 08 12 16 | 20 25 30 35 40 45 50 55 00 05 10 15 | 20 30 40 50 00 10 | 23 38 53 08 |
| Wsg | M X RB RB | 21 25 29 33 37 41 45 49 53 57 01 05 09 13 17 | 21 26 31 36 41 46 51 56 01 06 11 16 | 21 31 41 51 01 11 | 24 39 54 09 |
| Slu | M RB | 23 27 31 35 39 43 47 51 55 59 03 07 11 15 19 | 23 28 33 38 43 48 53 58 03 08 13 18 | 23 33 43 53 03 13 | 25 40 55 10 |
| Rzu | S M X RB | 24 28 32 36 40 44 48 52 56 00 04 08 12 16 20 | 24 29 34 39 44 49 54 59 04 09 14 19 | 24 34 44 54 04 14 | 26 41 56 11 |

| U9 → Osloer Str. (Mo-Sa HVZ) | | | (Mo-Sa NVZ,So,Ferien) | | | | | | (früh/abends) | | | (nachts) | |
|---|---|---|---|---|---|---|---|---|---|---|---|---|---|
| Rzu | S M X RB | 03 07 11 15 19 23 27 31 35 39 43 47 51 55 59 | 01 06 11 16 21 26 31 36 41 46 51 56 | 01 11 21 31 41 51 | 01 16 31 46 |
| Slo | M RB | 04 08 12 16 20 24 28 32 36 40 44 48 52 56 00 | 02 07 12 17 22 27 32 37 42 47 52 57 | 02 12 22 32 42 52 | 02 17 32 47 |
| Wsg | M X RB RB | 05 09 13 17 21 25 29 33 37 41 45 49 53 57 01 | 03 08 13 18 23 28 33 38 43 48 53 58 | 03 13 23 33 43 53 | 04 19 34 49 |
| Fw | RB | 06 10 14 18 22 26 30 34 38 42 46 50 54 58 02 | 04 09 14 19 24 29 34 39 44 49 54 59 | 04 14 24 34 44 54 | 05 20 35 50 |
| Bu | S RB | 08 12 16 20 24 28 32 36 40 44 48 52 56 00 04 | 06 11 16 21 26 31 36 41 46 51 56 01 | 06 16 26 36 46 56 | 06 21 36 51 |
| Beo | U7 RB RB | 09 13 17 21 25 29 33 37 41 45 49 53 57 01 05 | 07 12 17 22 27 32 37 42 47 52 57 02 | 07 17 27 37 47 57 | 08 23 38 53 |
| Gt | | 11 15 19 23 27 31 35 39 43 47 51 55 59 03 07 | 09 14 19 24 29 34 39 44 49 54 59 04 | 09 19 29 39 49 59 | 09 24 39 54 |
| Snu | U3 RB | 12 16 20 24 28 32 36 40 44 48 52 56 00 04 08 | 10 15 20 25 30 35 40 45 50 55 00 05 | 10 20 30 40 50 00 | 10 25 40 55 |
| Kfu | U1 M X RB RB | 13 17 21 25 29 33 37 41 45 49 53 57 01 05 09 | 11 16 21 26 31 36 41 46 51 56 01 06 | 11 21 31 41 51 01 | 11 26 41 56 |
| Zu | S U2 M X RB RB | 14 18 22 26 30 34 38 42 46 50 54 58 02 06 10 | 12 17 22 27 32 37 42 47 52 57 02 07 | 12 22 32 42 52 02 | 13 28 43 58 |
| Zu | S U2 M X RB RB | 14 18 22 26 30 34 38 42 46 50 54 58 02 06 10 | 12 17 22 27 32 37 42 47 52 57 02 07 | 12 22 32 42 52 02 | 15 30 45 00 |
| Ha | RB RB | 16 20 24 28 32 36 40 44 48 52 56 00 04 08 12 | 14 19 24 29 34 39 44 49 54 59 04 09 | 14 24 34 44 54 04 | 17 32 47 02 |
| Tm | M X RB RB | 18 22 26 30 34 38 42 46 50 54 58 02 06 10 14 | 16 21 26 31 36 41 46 51 56 01 06 11 | 16 26 36 46 56 06 | 18 33 48 03 |
| Bi | | 19 23 27 31 35 39 43 47 51 55 59 03 07 11 15 | 17 22 27 32 37 42 47 52 57 02 07 12 | 17 27 37 47 57 07 | 20 35 50 05 |
| WF | S | 20 24 28 32 36 40 44 48 52 56 00 04 08 12 16 | 18 23 28 33 38 43 48 53 58 03 08 13 | 18 28 38 48 58 08 | 21 36 51 06 |
| Am | RB | 22 26 30 34 38 42 46 50 54 58 02 06 10 14 18 | 20 25 30 35 40 45 50 55 00 05 10 15 | 20 30 40 50 00 10 | 22 37 52 07 |
| Lpu | U6 RB RB | 23 27 31 35 39 43 47 51 55 59 03 07 11 15 19 | 21 26 31 36 41 46 51 56 01 06 11 16 | 21 31 41 51 01 11 | 24 39 54 09 |
| Np | RB | 25 29 33 37 41 45 49 53 57 01 05 09 13 17 21 | 23 28 33 38 43 48 53 58 03 08 13 18 | 23 33 43 53 03 13 | 25 40 55 10 |
| Olo | U8 M Tram RB RB | 26 30 34 38 42 46 50 54 58 02 06 10 14 18 22 | 24 29 34 39 44 49 54 59 04 09 14 19 | 24 34 44 54 04 14 | 26 41 56 11 |

| U7 → Rudow (Mo-Fr HVZ) | | | (Mo-Fr NVZ,Sa-So,Ferien) | | | | | | (früh/abends) | | | (nachts) | |
|---|---|---|---|---|---|---|---|---|---|---|---|---|---|
| RSp | DB S M X RB RB | 00 – alle 4-5 min | 01 06 11 16 21 26 31 36 41 46 51 56 | 05 15 25 35 45 55 | 12 27 42 57 |
| AS | X | 01 – alle 4-5 min | 02 07 12 17 22 27 32 37 42 47 52 57 | 06 16 26 36 46 56 | 13 28 43 58 |
| Zi | X | 02 – alle 4-5 min | 04 09 14 19 24 29 34 39 44 49 54 59 | 07 17 27 37 47 57 | 15 30 45 00 |
| Hs | X RB RB | 04 – alle 4-5 min | 06 11 16 21 26 31 36 41 46 51 56 01 | 09 19 29 39 49 59 | 17 32 47 02 |
| P | RB RB | 06 – alle 4-5 min | 07 12 17 22 27 32 37 42 47 52 57 02 | 11 21 31 41 51 01 | 18 33 48 03 |
| Rm | RB RB | 07 – alle 4-5 min | 09 14 19 24 29 34 39 44 49 54 59 04 | 12 22 32 42 52 02 | 20 35 50 05 |
| Sie | RB | 09 – alle 4-5 min | 10 15 20 25 30 35 40 45 50 55 00 05 | 14 24 34 44 54 04 | 21 36 51 06 |
| Hl | RB | 10 – alle 4-5 min | 12 17 22 27 32 37 42 47 52 57 02 07 | 15 25 35 45 55 05 | 23 38 53 08 |
| JK | M X RB | 11 – alle 4-5 min | 13 18 23 28 33 38 43 48 53 58 03 08 | 16 26 36 46 56 06 | 24 39 54 09 |
| Jho | S M X RB | 13 – alle 4-5 min | 14 19 24 29 34 39 44 49 54 59 04 09 | 18 28 38 48 58 08 | 25 40 55 10 |
| Mp | M | 14 – alle 4-5 min | 16 21 26 31 36 41 46 51 56 01 06 11 | 19 29 39 49 59 09 | 27 42 57 12 |
| Rw | M | 16 – alle 4-5 min | 17 22 27 32 37 42 47 52 57 02 07 12 | 21 31 41 51 01 11 | 28 43 58 13 |
| Bmu | U2 | 17 – alle 4-5 min | 19 24 29 34 39 44 49 54 59 04 09 14 | 24 34 44 54 04 14 | 30 45 00 15 |
| Wd | S M X RB | 18 – alle 4-5 min | 20 25 30 35 40 45 50 55 00 05 10 15 | 25 35 45 55 05 15 | 31 46 01 16 |
| Ad | M X RB RB | 20 – alle 4-5 min | 21 26 31 36 41 46 51 56 01 06 11 16 | 26 36 46 56 06 16 | 32 47 02 17 |
| Kn | RB | 21 – alle 4-5 min | 22 27 32 37 42 47 52 57 02 07 12 17 | 27 37 47 57 07 17 | 33 48 03 18 |
| Fpu | U3 RB RB | 22 – alle 4-5 min | 24 29 34 39 44 49 54 59 04 09 14 19 | 29 39 49 59 09 19 | 35 50 05 20 |
| Bli | RB RB | 24 – alle 4-5 min | 25 30 35 40 45 50 55 00 05 10 15 20 | 30 40 50 00 10 20 | 36 51 06 21 |
| Beu | U9 RB RB | 25 – alle 4-5 min | 26 31 36 41 46 51 56 01 06 11 16 21 | 31 41 51 01 11 21 | 39 54 09 24 |
| Bpu | U4 | 26 – alle 4-5 min | 28 33 38 43 48 53 58 03 08 13 18 23 | 33 43 53 03 13 23 | 41 56 11 26 |
| Ei | | 27 – alle 4-5 min | 29 34 39 44 49 54 59 04 09 14 19 24 | 34 44 54 04 14 24 | 42 57 12 27 |
| Kt | M RB | 29 – alle 4-5 min | 30 35 40 45 50 55 00 05 10 15 20 25 | 35 45 55 05 15 15 | 43 58 13 28 |
| Y | S M | 30 – alle 4-5 min | 32 37 42 47 52 57 02 07 12 17 22 27 | 37 47 57 07 17 27 | 45 00 15 30 |
| Mu | U1 U8 | 32 – alle 4-5 min | 33 38 43 48 53 58 03 08 13 18 23 28 | 38 48 58 08 18 28 | 46 01 16 31 |
| Me | U6 M RB RB | 34 – alle 4-5 min | 35 40 45 50 55 00 05 10 15 20 25 30 | 40 50 00 10 20 30 | 49 04 19 34 |
| Gs | RB | 35 – alle 4-5 min | 37 42 47 52 57 02 07 12 17 22 27 32 | 42 52 02 12 22 32 | 50 05 20 35 |
| Sü | | 37 – alle 4-5 min | 38 43 48 53 58 03 08 13 18 23 28 33 | 43 53 03 13 23 33 | 52 07 22 37 |
| Hpu | U8 M RB RB | 39 – alle 4-5 min | 40 45 50 55 00 05 10 15 20 25 30 35 | 45 55 05 15 25 35 | 55 10 25 40 |
| Rk | RB RB | 40 – alle 4-5 min | 42 47 52 57 02 07 12 17 22 27 32 37 | 47 57 07 17 27 37 | 56 11 26 41 |
| KM | | 42 – alle 4-5 min | 43 48 53 58 03 08 13 18 23 28 33 38 | 48 58 08 18 28 38 | 58 13 28 43 |
| Nk | S RB RB | 43 – alle 4-5 min | 45 50 55 00 05 10 15 20 25 30 35 40 | 50 00 10 20 30 40 | 59 14 29 44 |
| Gz | RB | 45 – alle 4-5 min | 46 51 56 01 06 11 16 21 26 31 36 41 | 51 01 11 21 31 41 | 01 16 31 46 |
| Bl | RB | 46 – alle 4-5 min | 48 53 58 03 08 13 18 23 28 33 38 43 | 53 03 13 23 33 43 | 02 17 32 47 |
| Pi | M | 48 – alle 4-5 min | 49 54 59 04 09 14 19 24 29 34 39 44 | 54 04 14 24 34 44 | 04 19 34 49 |
| Br | M RB | 49 – alle 4-5 min | 51 56 01 06 11 16 21 26 31 36 41 46 | 56 06 16 26 36 46 | 05 20 35 50 |
| Jt | M X RB | 51 – alle 4-5 min | 52 57 02 07 12 17 22 27 32 37 42 47 | 57 07 17 27 37 47 | 07 22 37 52 |
| La | RB | 52 – alle 4-5 min | 54 59 04 09 14 19 24 29 34 39 44 49 | 59 09 19 29 39 49 | 08 23 38 53 |
| Wk | | 54 – alle 4-5 min | 55 00 05 10 15 20 25 30 35 40 45 50 | 00 10 20 30 40 50 | 10 25 40 55 |
| Zd | RB | 55 – alle 4-5 min | 56 01 06 11 16 21 26 31 36 41 46 51 | 01 11 21 31 41 51 | 11 26 41 56 |
| R | X RB | 56 – alle 4-5 min | 58 03 08 13 18 23 28 33 38 43 48 53 | 03 13 23 33 43 53 | 12 27 42 57 |

| U7 → Spandau (Mo-Fr HVZ) | | | (Mo-Fr NVZ,Sa-So,Ferien) | | | | | | (früh/abends) | | | (nachts) | |
|---|---|---|---|---|---|---|---|---|---|---|---|---|---|
| R | X RB | 00 – alle 4-5 min | 00 05 10 15 20 25 30 35 40 45 50 55 | 05 15 25 35 45 55 | 01 16 31 46 |
| Zd | RB | 02 – alle 4-5 min | 02 07 12 17 22 27 32 37 42 47 52 57 | 06 16 26 36 46 56 | 03 18 33 48 |
| Wk | | 03 – alle 4-5 min | 03 08 13 18 23 28 33 38 43 48 53 58 | 07 17 27 37 47 57 | 04 19 34 49 |
| La | RB | 04 – alle 4-5 min | 04 09 14 19 24 29 34 39 44 49 54 59 | 09 19 29 39 49 59 | 05 20 35 50 |
| Jt | M X RB | 06 – alle 4-5 min | 06 11 16 21 26 31 36 41 46 51 56 01 | 10 20 30 40 50 00 | 07 22 37 52 |
| Br | M RB | 08 – alle 4-5 min | 08 13 18 23 28 33 38 43 48 53 58 03 | 12 22 32 42 52 02 | 09 24 39 54 |
| Pi | M | 09 – alle 4-5 min | 09 14 19 24 29 34 39 44 49 54 59 04 | 13 23 33 43 53 03 | 10 25 40 55 |
| Bl | RB | 10 – alle 4-5 min | 10 15 20 25 30 35 40 45 50 55 00 05 | 15 25 35 45 55 05 | 11 26 41 56 |
| Gz | RB | 12 – alle 4-5 min | 12 17 22 27 32 37 42 47 52 57 02 07 | 17 27 37 47 57 07 | 13 28 43 58 |
| Nk | S RB RB | 14 – alle 4-5 min | 14 19 24 29 34 39 44 49 54 59 04 09 | 18 28 38 48 58 08 | 15 30 45 00 |
| KM | | 15 – alle 4-5 min | 15 20 25 30 35 40 45 50 55 00 05 10 | 20 30 40 50 00 10 | 16 31 46 01 |
| Rk | RB RB | 16 – alle 4-5 min | 16 21 26 31 36 41 46 51 56 01 06 11 | 21 31 41 51 01 11 | 17 32 47 02 |
| Hpu | U8 M RB RB | 18 – alle 4-5 min | 18 23 28 33 38 43 48 53 58 03 08 13 | 22 32 42 52 02 12 | 19 34 49 04 |
| Sü | | 20 – alle 4-5 min | 20 25 30 35 40 45 50 55 00 05 10 15 | 24 34 44 54 04 14 | 21 36 51 06 |
| Gs | RB | 21 – alle 4-5 min | 21 26 31 36 41 46 51 56 01 06 11 16 | 26 36 46 56 06 16 | 22 37 52 07 |
| Me | U6 M RB RB | 23 – alle 4-5 min | 23 28 33 38 43 48 53 58 03 08 13 18 | 28 38 48 58 08 18 | 25 40 55 10 |
| Mu | U1 U3 | 25 – alle 4-5 min | 25 30 35 40 45 50 55 00 05 10 15 20 | 29 39 49 59 09 19 | 26 41 56 11 |
| Y | S M | 26 – alle 4-5 min | 26 31 36 41 46 51 56 01 06 11 16 21 | 31 41 51 01 11 21 | 28 43 58 13 |
| Kt | M RB | 28 – alle 4-5 min | 28 33 38 43 48 53 58 03 08 13 18 23 | 32 42 52 02 12 22 | 29 44 59 14 |
| Ei | | 29 – alle 4-5 min | 29 34 39 44 49 54 59 04 09 14 19 24 | 34 44 54 04 14 24 | 31 46 01 16 |
| Bpu | U4 | 30 – alle 4-5 min | 30 35 40 45 50 55 00 05 10 15 20 25 | 35 45 55 05 15 25 | 32 47 02 17 |
| Beu | U9 RB RB | 32 – alle 4-5 min | 32 37 42 47 52 57 02 07 12 17 22 27 | 38 48 58 08 18 28 | 33 48 03 18 |
| Bli | RB RB | 33 – alle 4-5 min | 33 38 43 48 53 58 03 08 13 18 23 28 | 39 49 59 09 19 29 | 34 49 04 19 |
| Fpu | U3 RB RB | 34 – alle 4-5 min | 34 39 44 49 54 59 04 09 14 19 24 29 | 41 51 01 11 21 31 | 36 51 06 21 |
| Kn | RB | 36 – alle 4-5 min | 36 41 46 51 56 01 06 11 16 21 26 31 | 42 52 02 12 22 32 | 37 52 07 22 |
| Ad | M X RB RB | 37 – alle 4-5 min | 37 42 47 52 57 02 07 12 17 22 27 32 | 43 53 03 13 23 33 | 38 53 08 23 |
| Wd | S M X RB | 38 – alle 4-5 min | 38 43 48 53 58 03 08 13 18 23 28 33 | 45 55 05 15 25 35 | 40 55 10 25 |
| Bmu | U2 | 40 – alle 4-5 min | 40 45 50 55 00 05 10 15 20 25 30 35 | 46 56 06 16 26 36 | 41 56 11 26 |
| Rw | M | 41 – alle 4-5 min | 41 46 51 56 01 06 11 16 21 26 31 36 | 47 57 07 17 27 37 | 42 57 12 27 |
| Mp | M | 43 – alle 4-5 min | 43 48 53 58 03 08 13 18 23 28 33 38 | 49 59 09 19 29 39 | 44 59 14 29 |
| Jhu | S M X RB | 44 – alle 4-5 min | 44 49 54 59 04 09 14 19 24 29 34 39 | 50 00 10 20 30 40 | 45 00 15 30 |
| JK | M X RB | 45 – alle 4-5 min | 45 50 55 00 05 10 15 20 25 30 35 40 | 52 02 12 22 32 42 | 47 02 17 32 |
| Hl | RB | 47 – alle 4-5 min | 47 52 57 02 07 12 17 22 27 32 37 42 | 53 03 13 23 33 43 | 48 03 18 33 |
| Sie | RB | 48 – alle 4-5 min | 48 53 58 03 08 13 18 23 28 33 38 43 | 55 05 15 25 35 45 | 50 05 20 35 |
| Rm | RB RB | 49 – alle 4-5 min | 49 54 59 04 09 14 19 24 29 34 39 44 | 56 06 16 26 36 46 | 51 06 21 36 |
| P | RB RB | 51 – alle 4-5 min | 51 56 01 06 11 16 21 26 31 36 41 46 | 58 08 18 28 38 48 | 53 08 23 38 |
| Hs | X RB RB | 53 – alle 4-5 min | 53 58 03 08 13 18 23 28 33 38 43 48 | 59 09 19 29 39 49 | 54 09 24 39 |
| Zi | X | 54 – alle 4-5 min | 54 59 04 09 14 19 24 29 34 39 44 49 | 01 11 21 31 41 51 | 56 11 26 41 |
| AS | X | 56 – alle 4-5 min | 56 01 06 11 16 21 26 31 36 41 46 51 | 02 12 22 32 42 52 | 57 12 27 42 |
| RSp | DB S M X RB RB | 57 – alle 4-5 min | 57 02 07 12 17 22 27 32 37 42 47 52 | 03 13 23 33 43 53 | 58 13 28 43 |

## N1 → S+U Zoologischer Garten

| | | |
|---|---|---|
| BWRS/WA | M M10 | 11 25 41 55 |
| S | N65 | 14 28 44 58 |
| Gr | M M29 | 18 32 48 02 |
| Kbo/Kbu | N8 | 20 34 50 04 |
| Pr | | 21 35 51 05 |
| Ho/Hu | M M41 N42 | 26 37 56 07 |
| Mehringbr. | N6 | 26 40 56 10 |
| Mo/Mu | | 27 41 57 11 |
| MB | M M29 | 29 43 59 13 |
| Pdmr. Br. | N2 M M29 M48 | 30 44 00 14 |
| Kus | N2 M M48 | 32 46 02 16 |
| Bs | N2 M M19 M48 | 33 47 03 17 |
| No/Nm/Nu | N2 M M19 N26 | 34 48 04 18 |
| Wt | N2 N3 M M19 M29 M46 N26 | 37 51 07 21 |
| Kfo/Kfu | N2 N3 N9 M M19 M29 M46 N10 N26 | 54 24 |
| BZOS/Zo/Zu | N2 N9 M M45 M46 M49 N10 N26 | 56 26 |

## N1 → S+U Warschauer Straße

| | | |
|---|---|---|
| BZOS/Zo/Zu | N2 N9 M M45 M46 M49 N10 N26 | 00 30 |
| Kfo/Kfu | N2 N3 N9 M M19 M29 M46 N10 N26 | 02 32 |
| Wt | N2 N3 M M19 M29 M46 N26 | 05 21 35 51 |
| No/Nm/Nu | N2 M M19 N26 | 08 24 38 54 |
| Bs | N2 M M19 M48 | 09 25 39 55 |
| Kus | N2 M M48 | 10 26 40 56 |
| Pdmr. Br. | N2 M M29 M48 | 12 28 42 58 |
| MB | M M29 | 13 29 43 59 |
| Mo/Mu | | 15 31 45 01 |
| Mehringbr. | N6 | 16 32 46 02 |
| Ho/Hu | M M41 N42 | 17 33 47 03 |
| Pr | | 19 35 49 05 |
| Kbo/Kbu | N8 | 20 36 50 06 |
| Gr | M M29 | 22 38 52 08 |
| S | N65 | 25 41 55 11 |
| BWRS/WA | M M10 | 28 44 58 14 |

## N3 → S Mexikoplatz

| | | |
|---|---|---|
| Wt | N1 N2 M M19 M29 M46 N26 | 14 44 |
| Kfo/Kfu | N1 N2 N9 M M19 M29 M46 N10 N26 | 17 47 |
| Sno/Snu | N9 | 20 50 |
| Hz | | 21 51 |
| Fpo/Fpu | N7 N42 | 23 53 |
| BHO | N10 | 25 55 |
| BHEI/Hb | | 27 57 |
| Wiesbad. Str. | | 30 00 |
| Bt | | 32 02 |
| Rohlfsstr. | | 33 03 |
| Dd | M M11 | 36 06 |
| T | | 38 08 |
| Os | N10 | 42 12 |
| Onk.-Tom-Str. | | 44 14 |
| K | | 46 16 |
| BMEX | | 48 18 |

## N3 → U Wittenbergplatz

| | | |
|---|---|---|
| BMEX | | 20 50 |
| K | | 22 52 |
| Onk.-Tom-Str. | | 24 54 |
| Os | N10 | 26 56 |
| T | | 28 58 |
| Dd | M M11 | 30 00 |
| Rohlfsstr. | | 32 02 |
| Bt | | 34 04 |
| Wiesbad. Str. | | 36 06 |
| BHEI/Hb | | 39 09 |
| BHO | N10 | 41 11 |
| Fpo/Fpu | N7 N42 | 47 17 |
| Hz | | 49 19 |
| Sno/Snu | N9 | 50 20 |
| Kfo/Kfu | N1 N2 N9 M M19 M29 M46 N10 N26 | 52 22 |
| Wt | N1 N2 M M19 M29 M46 N26 | 55 25 |

## N2 → U Ruhleben

| | | | WE |
|---|---|---|---|
| BPKW/PA | M M1 M M27 N50 | 26 56 | |
| VIN | M M1 | 29 59 | |
| Bornh.Str. | M M1 M13 | 31 01 | |
| BSAL/Sh | M M1 | 32 02 | |
| EB | M M1 M10 | 35 05 | |
| Sz | | 38 08 | |
| Lu | | 40 10 | |
| ALX/A/Al/Ap | M M48 N42 | | 09 39 |
| W | N5 N8 M M1 N40 N42 N65 | 27 42 57 12 | 12 42 |
| BHKM | N5 N8 M M1 M4 M5 N40 N42 N65 | 28 43 58 13 | 13 43 |
| BHKM | N5 N8 M M1 M4 M5 N40 N42 N65 | 30 45 00 15 | 15 45 |
| ULO/ULU | N6 | 34 49 04 19 | 19 49 |
| MH | | 38 53 08 23 | 23 53 |
| BPOP/Pd | M M41 M48 | 42 57 12 27 | 27 57 |
| Pdmr. Br. | N1 M M29 M48 | 45 00 15 30 | 30 00 |
| Kus | N1 M M48 | 47 02 17 32 | 32 02 |
| Bs | N1 M M19 M48 | 48 03 18 33 | 33 03 |
| No/Nm/Nu | N1 M M19 N26 | 49 04 19 34 | 34 04 |
| Wt | N1 N3 M M19 M29 M46 N26 | 52 07 22 37 | 37 07 |
| Kfo/Kfu | N1 N3 N9 M M19 M29 M46 N10 N26 | 55 10 25 40 | 40 10 |
| BZOS/Zo/Zu | N1 N9 M M45 M46 M49 N10 N26 | 56 11 26 41 | 41 11 |
| BZOS/Zo/Zu | N1 N9 M M45 M46 M49 N10 N26 | 15 45 | |
| RP | M M45 | 18 48 | |
| Obi | | 20 50 | |
| Bmo/Bmu | N7 | 24 54 | |
| So | | 26 56 | |
| Kd | | 27 57 | |
| Th | M M49 N42 | 30 00 | |
| Nd | | 32 02 | |
| Rl | M M45 | 36 06 | |

## N2 → S+U Pankow

| | | | WE |
|---|---|---|---|
| Rl | M M45 | 21 51 | |
| Nd | | 25 55 | |
| Th | M M49 N42 | 27 57 | |
| Kd | | 28 58 | |
| So | | 30 00 | |
| Bmo/Bmu | N7 | 33 03 | |
| Obi | | 35 05 | |
| RP | M M45 | 37 07 | |
| BZOS/Zo/Zu | N1 N9 M M45 M46 M49 N10 N26 | 43 13 | |
| BZOS/Zo/Zu | N1 N9 M M45 M46 M49 N10 N26 | 30 45 00 15 | 00 30 |
| Kfo/Kfu | N1 N3 N9 M M19 M29 M46 N10 N26 | 32 47 02 17 | 02 32 |
| Wt | N1 N3 M M19 M29 M46 N26 | 35 50 05 20 | 05 35 |
| No/Nm/Nu | N1 M M19 N26 | 38 53 08 23 | 08 38 |
| Bs | N1 M M19 M48 | 39 54 09 24 | 09 39 |
| Kus | N1 M M48 | 40 55 10 25 | 10 40 |
| Pdmr. Br. | N1 M M29 M48 | 42 57 12 27 | 12 42 |
| BPOP/Pd | M M41 M48 | 45 00 15 30 | 15 45 |
| MH | | 47 02 17 32 | 17 47 |
| ULO/ULU | N6 | 50 05 20 35 | 20 50 |
| BHKM | N5 N8 M M1 M4 M5 N40 N42 N65 | 55 10 25 40 | 25 55 |
| BHKM | N5 N8 M M1 M4 M5 N40 N42 N65 | 15 45 | 25 55 |
| W | N5 N8 M M1 N40 N42 N65 | 17 47 | 27 57 |
| ALX/A/Al/Ap | M M48 N42 | | 29 59 |
| Lu | | 20 50 | |
| Sz | | 21 51 | |
| EB | M M1 M10 | 24 54 | |
| BSAL/Sh | M M1 | 27 57 | |
| Bornh. Str. | M M1 M13 | 28 58 | |
| VIN | M M1 | 30 00 | |
| BPKW/PA | M M1 M M27 N50 | 33 03 | |

## N6 → U Alt-Mariendorf

| | | |
|---|---|---|
| Tg | N22 N24 N25 N33 | 07 37 |
| Bk | | 09 39 |
| Hh | N33 | 11 41 |
| Otisstraße | | 13 43 |
| Scha | | 15 45 |
| Sch | M M21 | 18 48 |
| Afr | | 21 51 |
| Rb | | 22 52 |
| Se | M M13 N20 N26 | 25 55 |
| Lpo/Lpu | N9 N20 | 28 58 |
| BWED/WE | N20 | 29 59 |
| Ri | M M27 N20 | 31 01 |
| Sk | | 33 03 |
| NA | M M10 N40 | 35 05 |
| Ob | M M1 | 37 07 |
| BFST/BFSTT/F | M M1 | 38 08 |
| ULO/ULU | N2 | 40 10 |
| Mic | M M48 | 41 11 |
| Ks | M M29 | 43 13 |
| Mehringbr. | N1 | 50 20 |
| Me | N7 M M19 N42 | 53 23 |
| Me | N7 M M19 N42 | 58 28 |
| PL | N42 | 59 29 |
| Ps | | 01 31 |
| Ts | N84 | 02 32 |
| At | M M46 N84 | 04 34 |
| Ka | | 06 36 |
| Ull | | 08 38 |
| Wl | | 10 40 |
| Mf (Alt-M'df) | M M76 M77 N79 | 12 42 |

## N6 → U Alt-Tegel

| | | |
|---|---|---|
| Mf (Alt-M'df) | M M76 M77 N79 | 16 46 |
| Wl | | 17 47 |
| Ull | | 19 49 |
| Ka | | 21 51 |
| At | M M46 N84 | 24 54 |
| Ts | N84 | 26 56 |
| Ps | | 28 58 |
| PL | N42 | 29 59 |
| Me | N7 M M19 N42 | 36 06 |
| Mehringbr. | N1 | 39 09 |
| Ks | M M29 | 42 12 |
| Mic | M M48 | 44 14 |
| ULO/ULU | N2 | 46 16 |
| BFST/BFSTT/F | M M1 | 48 18 |
| Ob | M M1 | 50 20 |
| NA | M M10 N40 | 52 22 |
| Sk | | 53 23 |
| Ri | M M27 N20 | 55 25 |
| BWED/WE | N20 | 56 26 |
| Lpo/Lpu | N9 N20 | 58 28 |
| Lpo/Lpu | N9 N20 | 02 32 |
| Se | M M13 N20 N26 | 04 34 |
| Rb | | 08 38 |
| Afr | | 09 39 |
| Sch | M M21 | 13 43 |
| Scha | | 17 47 |
| Otisstraße | | 18 48 |
| Hh | N33 | 20 50 |
| Bk | | 22 52 |
| Tg | N22 N24 N25 N33 | 24 54 |

## N8 → S+U Hermannstraße

| | | |
|---|---|---|
| Wilhelmsr. D. | N24 N53 | 21 51 |
| WIU | M M21 N24 | 25 55 |
| RR | | 28 58 |
| KB | M M21 | 31 01 |
| LD | | 33 03 |
| PB | N20 | 35 05 |
| RE | | 38 08 |
| FN | | 40 10 |
| Olo/Olu | N9 M M13 N52 | 42 12 |
| Olo/Olu | N9 M M13 N52 | 44 14 |
| Pk | M M27 | 47 17 |
| BGB/Gb | | 49 19 |
| Vo | | 52 22 |
| B | M M10 | 53 23 |
| Ro | M M1 N40 | 55 25 |
| W | N2 N5 M M1 N40 N42 N65 | 56 26 |
| BHKM | N2 N5 M M1 M4 M5 N40 N42 N65 | 57 27 |
| BHKM | N2 N5 M M1 M4 M5 N40 N42 N65 | 00 30 |
| BJB/Jn | N40 N65 | 04 34 |
| He | N65 | 06 36 |
| Mr | M M29 | 08 38 |
| Kbo/Kbu (N) | N1 | 13 43 |
| Kbo/Kbu (S) | N1 | 14 44 |
| ST | | 16 46 |
| Hpo/Hpu (W) | N7 M M29 M41 N94 | 18 48 |
| Hpo/Hpu (W) | N7 M M29 M41 N94 | 18 48 |
| Bo | | 19 49 |
| L | | 21 51 |
| HMS | M M44 N79 | 23 53 |

## N8 → Wilhelmsruher Damm

| | | |
|---|---|---|
| HMS | M M44 N79 | 02 32 |
| L | | 04 34 |
| Bo | | 06 36 |
| Hpo/Hpu (O) | N7 M M29 M41 N94 | 09 39 |
| Hpo/Hpu (O) | N7 M M29 M41 N94 | 12 42 |
| ST | | 14 44 |
| Kbo/Kbu (S) | N1 | 16 46 |
| Kbo/Kbu (N) | N1 | 17 47 |
| Mr | M M29 | 19 49 |
| He | N65 | 21 51 |
| BJB/Jn | N40 N65 | 22 52 |
| BHKM | N2 N5 M M1 M4 M5 N40 N42 N65 | 25 55 |
| BHKM | N2 N5 M M1 M4 M5 N40 N42 N65 | 30 00 |
| W | N2 N5 M M1 N40 N42 N65 | 31 01 |
| Ro | M M1 N40 | 32 02 |
| B | M M10 N40 | 35 05 |
| Vo | | 36 06 |
| BGB/Gb | | 38 08 |
| Pk | M M27 | 40 10 |
| Olo/Olu | N9 M M13 N52 | 44 14 |
| FN | | 46 16 |
| RE | | 48 18 |
| PB | N20 | 51 21 |
| LD | | 53 23 |
| KB | M M21 | 55 25 |
| RR | | 58 28 |
| WIU | M M21 N24 | 01 31 |
| Wilhelmsr. D. | N24 N53 | 07 37 |

## N5 → S Hackescher Markt

| | | |
|---|---|---|
| Riesaer Str. | M M6 N95 | 11 41 |
| Hö | | 14 44 |
| LL | | 15 45 |
| Hd | M M6 | 19 49 |
| C | | 21 51 |
| GK | | 23 53 |
| KL | N91 | 26 56 |
| BWT/Wh | N69 N90 N91 N95 | 29 59 |
| BWT/Wh | N69 N90 N91 N95 | 31 46 01 16 |
| Alt-Biesdorf | | 34 49 04 19 |
| Rhinstr. | M M17 | 39 54 09 24 |
| R.-Uhrig-Str. | | 40 55 10 25 |
| Lichtenb. Br. | N50 N94 | 41 56 11 26 |
| Md | N50 N56 N94 | 42 57 12 27 |
| BFA/Ff | M M13 | 44 59 14 29 |
| Sa | | 46 01 16 31 |
| Ft | M M10 | 47 02 17 32 |
| WR | | 49 04 19 34 |
| Sr | | 51 06 21 36 |
| Si | | 53 08 23 38 |
| A/Al/Ap (U) | M M4 M5 N65 | 54 09 24 39 |
| W | N2 N42 | 57 27 |
| BALX (Memh.s) | M M2 M M48 N42 | 09 39 |
| BALX (Liebk.) | M M48 | 10 40 |
| BHKM | N2 N8 M M1 M4 M5 N40 N42 N65 | 12 42 |

## N5 → Riesaer Straße

| | | |
|---|---|---|
| BHKM | N2 N8 M M1 M4 M5 N40 N42 N65 | 00 15 30 45 |
| W | N2 N42 | 02 17 32 47 |
| A/Al/Ap (U) | M M4 M5 N65 | 04 19 34 49 |
| Si | | 06 21 36 51 |
| Sr | | 08 23 38 53 |
| WR | | 10 25 40 55 |
| Ft | M M10 | 12 27 42 57 |
| Sa | | 14 29 44 59 |
| Ff | M M13 | 16 31 46 01 |
| Md | N50 N56 N94 | 18 33 48 03 |
| Lichtenb. Br. | N50 N94 | 19 34 49 04 |
| R.-Uhrig-Str. | | 21 36 51 06 |
| Rhinstr. | M M17 | 22 37 52 07 |
| Alt-Biesdorf | | 27 42 57 12 |
| BWT/Wh | N69 N90 N91 N95 | 31 46 01 16 |
| KL | N91 | 35 05 |
| GK | | 37 07 |
| C | | 39 09 |
| Hd | M M6 | 41 11 |
| LL | | 45 15 |
| Hö | | 46 16 |
| Riesaer Str. | M M6 N95 | 48 18 |

| N7 → Flughafen Schönefeld | | | WE |
|---|---|---|---|
| BSPA/RSp | M32 M37 M45 N30 N34 | 08 38 | |
| AS | | 10 40 | |
| Zi | | 11 41 | |
| Hs | N33 | 13 43 | |
| P | N39 | 15 45 | |
| Rm | N23 N39 | 17 47 | |
| Sie | | 19 49 | |
| Halemweg | | 21 51 | |
| JK | M21 | 24 54 | |
| BJUN/Jho/Jhu | M21 M27 | 26 56 | |
| Mp | M27 | 28 58 | |
| Rw | M45 | 30 00 | |
| Bmo/Bmu | N2 | 32 02 | |
| Ks-Friedr.-S. | M49 | 34 04 | |
| BCHS | | 35 05 | |
| Ad | M19 M29 N10 | 37 07 | |
| Ad | M19 M29 N10 | 40 10 | |
| Kn | | 43 13 | |
| Fpo/Fpu | N3 N42 | 44 14 | |
| Bli | N42 | 46 16 | |
| Beo/Beu | N9 N42 | 48 18 | |
| Beo/Beu | N9 N42 | 53 23 | |
| Bpo/Bpu | | 54 24 | |
| Grunewaldstr. | M46 | 54 24 | |
| Ei | | 55 25 | |
| Kt | M48 | 57 27 | |
| BGGS/Y | M19 | 59 29 | |
| BYOR/Y | M19 | 00 30 | |
| Großbeerenstr | M19 | 02 32 | |
| Me | N6 M19 N42 | 03 33 | |
| Gs | | 05 35 | |
| Sü | | 08 38 | |
| Hpo/Hpu (O) | N8 M29 M41 N94 | 11 41 | |
| Hpo/Hpu (O) | N8 M29 M41 N94 | 13 43 | |
| Hpo/Hpu (W) | N8 M29 M41 N94 | 14 44 | |
| Hpo/Hpu (W) | N8 M29 M41 N94 | 18 48 | |
| Rk | N94 | 21 51 | |
| KM | | | |
| Nk | N79 | 28 58 | |
| Gz | | 30 00 | |
| Buschkrug | | 33 03 | |
| Parchim. All. | M46 | 35 05 | |
| Gutschmidtstr | | 38 08 | |
| Johann. Ch. | M11 | 40 10 | |
| Lipschitzall. | M11 | 42 12 | |
| Wutzkyallee | M11 | 43 13 | |
| Zwickauer D. | M11 | 44 14 | |
| R | | 47 17 | 47 17 |
| BFLH | N60 | 55 25 | 55 25 |
| SXF ✈ | N60 | 57 27 | 57 27 |

| N7 → S+U Rathaus Spandau | | | WE |
|---|---|---|---|
| SXF ✈ | N60 | 06 36 | 03 33 |
| BFLH | N60 | 08 38 | 05 35 |
| R | | 15 45 | 12 42 |
| Zwickauer D. | M11 | 18 48 | |
| Wutzkyallee | M11 | 19 49 | |
| Lipschitzall. | M11 | 20 50 | |
| Johann. Ch. | M11 | 22 52 | |
| Gutschmidtstr | | 24 54 | |
| Parchim. All. | M46 | 27 57 | |
| Buschkrug | | 29 59 | |
| Gz | | 32 02 | |
| Nk | N79 | 34 04 | |
| KM | | 36 06 | |
| Rk | N94 | 38 08 | |
| Hpo/Hpu (O) | N8 M29 M41 N94 | 40 10 | |
| Hpo/Hpu (O) | N8 M29 M41 N94 | 43 13 | |
| Hpo/Hpu (W) | N8 M29 M41 N94 | 44 14 | |
| Hpo/Hpu (W) | N8 M29 M41 N94 | 48 18 | |
| Sü | | 51 21 | |
| Gs | | 54 24 | |
| Me | N6 M19 N42 | 56 26 | |
| Großbeerenstr | M19 | 57 27 | |
| BYOR/Y | M19 | 59 29 | |
| BGGS/Y | M19 | 00 30 | |
| Kt | M48 | 02 32 | |
| Ei | | 04 34 | |
| Grunewaldstr. | M46 | 05 35 | |
| Bpo/Bpu | | 05 35 | |
| Beo/Beu | N9 N42 | 07 37 | |
| Bli | N42 | 10 40 | |
| Fpo/Fpu | N3 N42 | 11 41 | |
| Fpo/Fpu | N3 N42 | 14 44 | |
| Kn | | 15 45 | |
| Ad | M19 M29 N10 | 17 47 | |
| BCHS | | 18 48 | |
| Ks-Friedr.-S. | M49 | 19 49 | |
| Bmo/Bmu | N2 | 22 52 | |
| Rw | M45 | 24 54 | |
| Mp | M27 | 26 56 | |
| BJUN/Jho/Jhu | M21 M27 | 28 58 | |
| JK | M21 | 30 00 | |
| Halemweg | | 33 03 | |
| Sie | | 35 05 | |
| Rm | N23 N39 | 37 07 | |
| P | N39 | 39 09 | |
| Hs | N33 | 41 11 | |
| Hs | N33 | 44 14 | |
| Zi | | 46 16 | |
| AS | | 47 17 | |
| BSPA/RSp | M32 M37 M45 N30 N34 | 50 20 | |

| N9 → S+U Rathaus Steglitz | | |
|---|---|---|
| Olo/Olu | N8 M13 N52 | 06 21 36 51 |
| Np | | 09 24 39 54 |
| Lpo/Lpu | N6 N20 | 11 26 41 56 |
| Lpo/Lpu | N6 N20 | 11 29 41 59 |
| Am | | 13 31 43 01 |
| BWF/WF | | 15 33 45 03 |
| Bi | | 16 34 46 04 |
| Tm | M27 N40 | 17 35 47 05 |
| Tm | M27 N40 | 19 35 49 05 |
| Bachstraße | | 21 37 51 07 |
| BTGN | | 22 38 52 08 |
| BZOS/Zo/Zu | N1 N2 M45 M46 M49 N10 N26 | 26 42 56 12 |
| BZOS/Zo/Zu | N1 N2 M45 M46 M49 N10 N26 | 45 15 |
| Kfo/Kfu | N1 N2 N3 M19 M29 M46 N10 N26 | 47 17 |
| Sno/Snu | N3 | 50 20 |
| Gt | | 51 21 |
| Beo/Beu | N7 N42 | 53 23 |
| BBUP/Bu | | 56 26 |
| Fw | | 58 28 |
| Wsg | M48 M76 N81 | 01 31 |
| Slo/Slu | M48 | 02 32 |
| BRST/Rzu | M48 M82 M85 N88 | 05 35 |

| N9 → U Osloer Straße | | |
|---|---|---|
| BRST/Rzu | M48 M82 M85 N88 | 28 58 |
| Slo/Slu | M48 | 30 00 |
| Wsg | M48 M76 N81 | 32 02 |
| Fw | | 34 04 |
| BBUP/Bu | | 35 05 |
| Beo/Beu | N7 N42 | 38 08 |
| Gt | | 40 10 |
| Sno/Snu | N3 | 41 11 |
| Kfo/Kfu | N1 N2 N3 M19 M29 M46 N10 N26 | 43 13 |
| BZOS/Zo/Zu | N1 N2 M45 M46 M49 N10 N26 | 44 14 |
| BZOS/Zo/Zu | N1 N2 M45 M46 M49 N10 N26 | 30 45 00 15 |
| BTGN | | 33 48 03 18 |
| Bachstraße | | 34 49 04 19 |
| Tm | M27 N40 | 37 52 07 22 |
| Bi | | 39 54 09 24 |
| BWF/WF | | 40 55 10 25 |
| Am | | 42 57 12 27 |
| Lpo/Lpu | N6 N20 | 45 00 15 30 |
| Lpo/Lpu | N6 N20 | 45 02 15 32 |
| Np | | 47 04 17 34 |
| Olo/Olu | N8 M13 N52 | 50 07 20 37 |

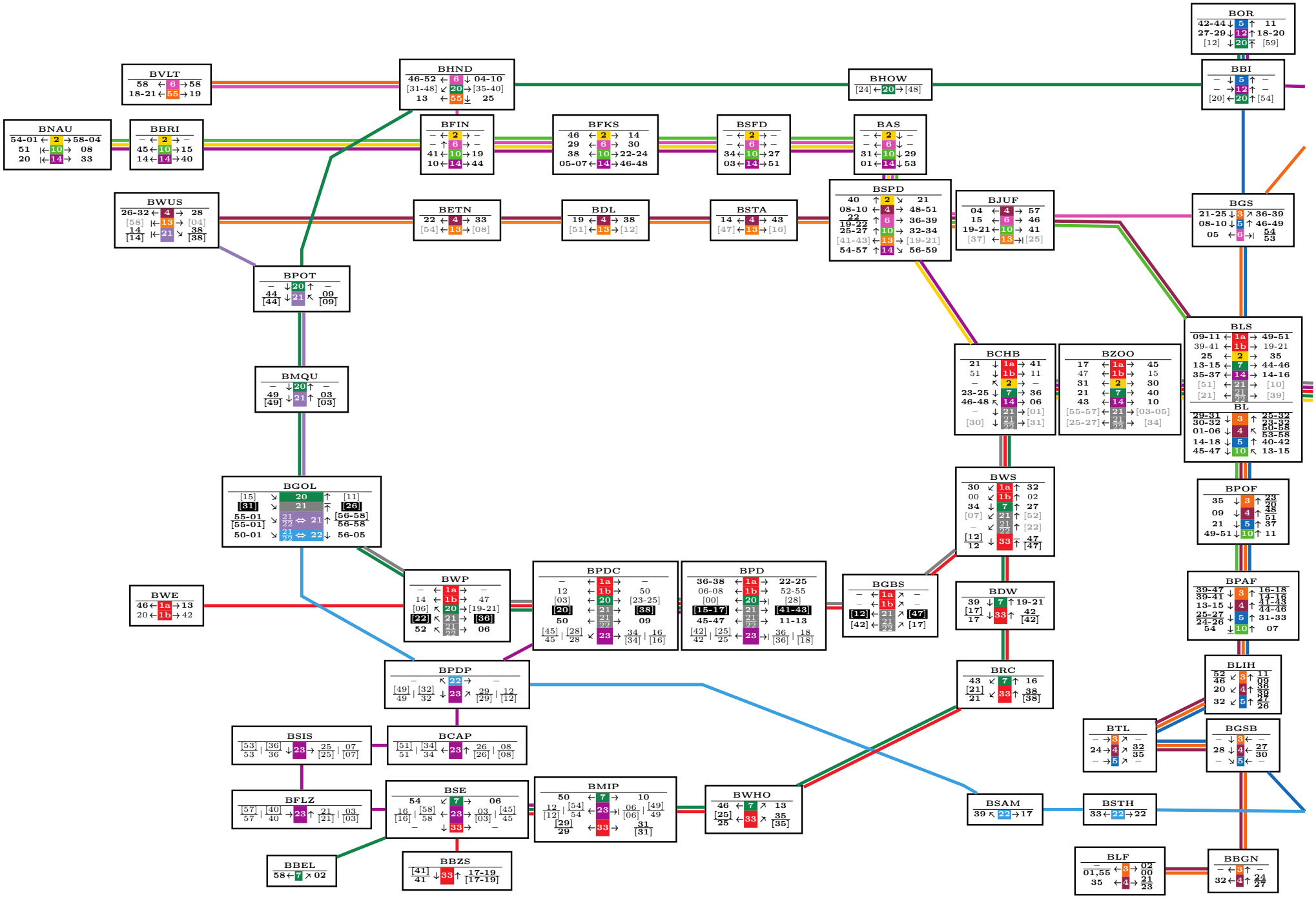
BOR
BVLT
BHND
BHOW
BBI
BNAU
BBRI
BFIN
BFKS
BSFD
BAS
BWUS
BETN
BDL
BSTA
BSPD
BJUF
BGS
BPOT
BCHB
BZOO
BLS
BL
BMQU
BGOL
BWS
BPOF
BWE
BWP
BPDC
BPD
BGBS
BDW
BPAF
BPDP
BRC
BLIH
BSIS
BCAP
BTL
BGSB
BFLZ
BSE
BMIP
BWHO
BSAM
BSTH
BBEL
BBZS
BLF
BBGN

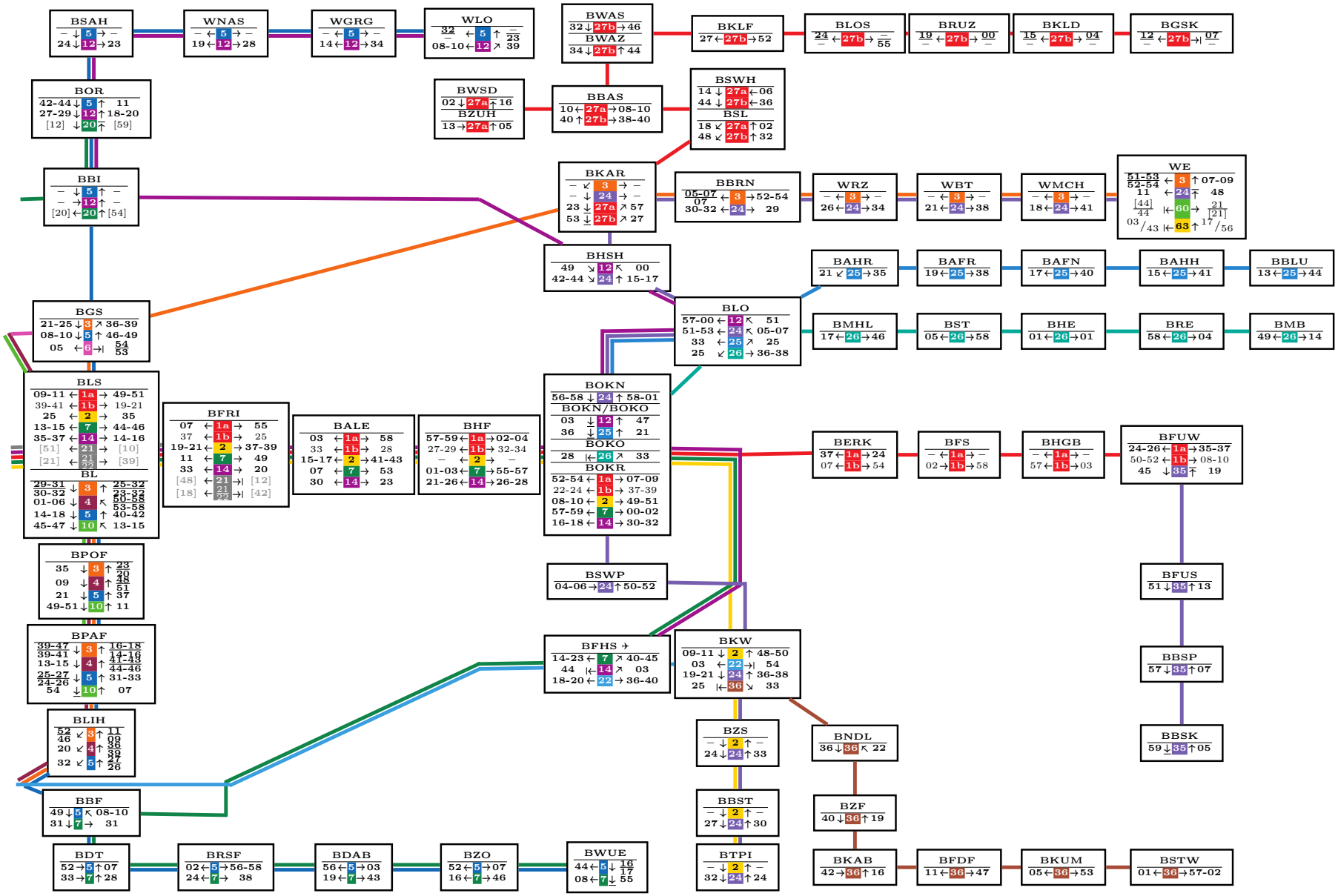
BSAH
WNAS
WGRG
WLO
BWAS
BWAZ
BKLF
BLOS
BRUZ
BKLD
BGSK
BOR
BWSD
BZUH
BBAS
BSWH
BSL
BBI
BKAR
BBRN
WRZ
WBT
WMCH
WE
BHSH
BAHR
BAFR
BAFN
BAHH
BBLU
BGS
BLO
BMHL
BST
BHE
BRE
BMB
BLS
BL
BFRI
BALE
BHF
BOKN
BOKN/BOKO
BOKO
BOKR
BERK
BFS
BHGB
BFUW
BPOF
BSWP
BFUS
BPAF
BFHS
BKW
BBSP
BLIH
BZS
BNDL
BBSK
BBF
BBST
BZF
BDT
BRSF
BDAB
BZO
BWUE
BTPI
BKAB
BFDF
BKUM
BSTW

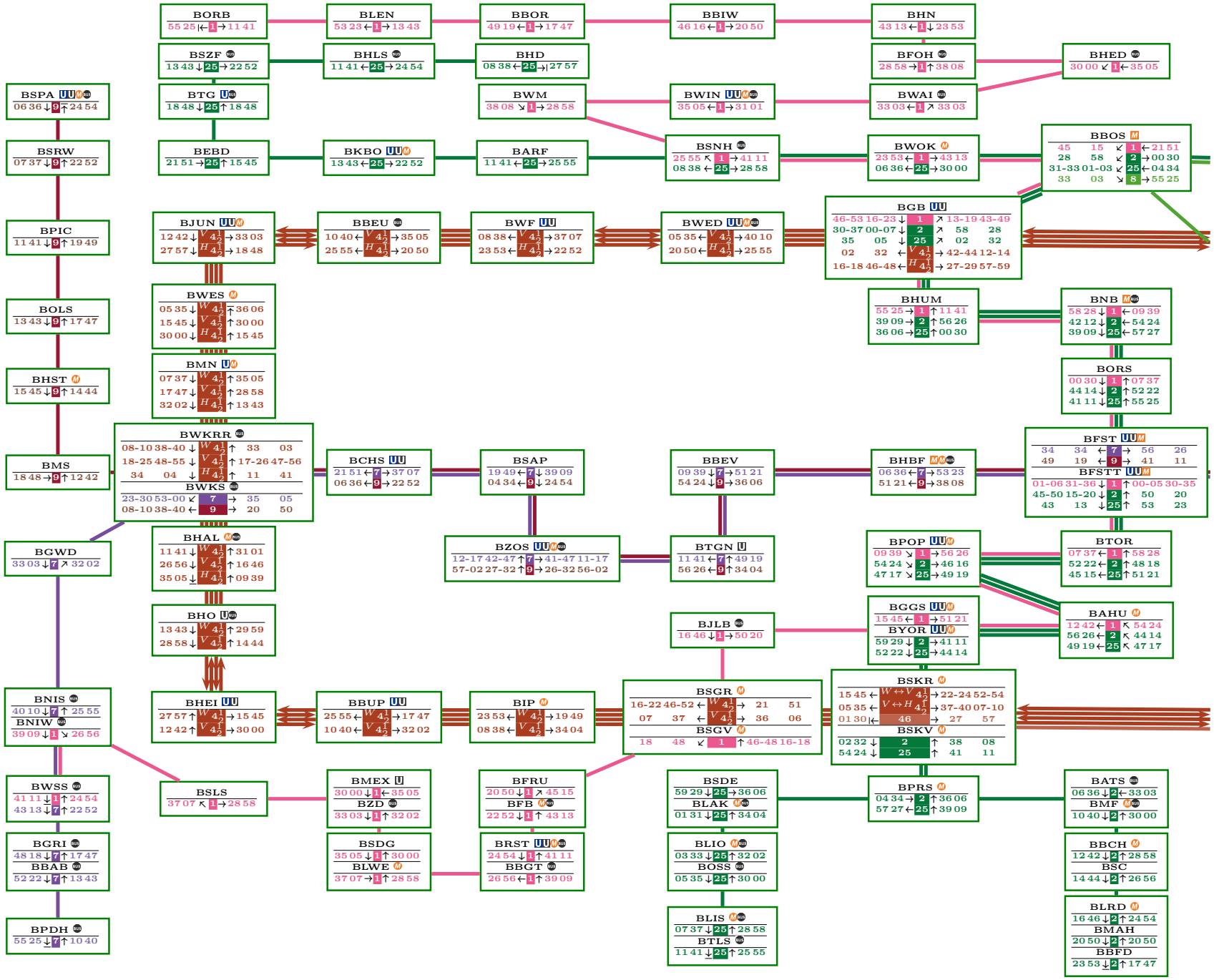
BORB
55 25 ← 1 → 11 41
BLEN
53 23 ← 1 → 13 43
BBOR
49 19 ← 1 → 17 47
BBIW
46 16 ← 1 → 20 50
BHN
43 13 ← 1 ↓ 23 53
BSZF
13 43 ↓ 25 → 22 52
BHLS
11 41 ← 25 → 24 54
BHD
08 38 ← 25 → 27 57
BFOH
28 58 → 1 ↑ 38 08
BHED
30 00 ↙ 1 ← 35 05
BSPA
06 36 ↓ 9 ↑ 24 54
BTG
18 48 ↓ 25 ↑ 18 48
BWM
38 08 ↘ 1 → 28 58
BWIN
35 05 ← 1 → 31 01
BWAI
33 03 ← 1 ↗ 33 03
BSRW
07 37 ↓ 9 ↑ 22 52
BEBD
21 51 → 25 ↑ 15 45
BKBO
13 43 ← 25 → 22 52
BARF
11 41 ← 25 → 25 55
BSNH
25 55 ↖ 1 → 41 11
08 38 ← 25 → 28 58
BWOK
23 53 ← 1 → 43 13
06 36 ← 25 → 30 00
BBOS
45 15 ↙ 1 ← 21 51
28 58 ↙ 2 → 00 30
31-33 01-03 ↙ 25 ← 04 34
33 03 ↘ 8 → 55 25
BPIC
11 41 ↓ 9 ↑ 19 49
BJUN
12 42 ↓ V 4 1/2 → 33 03
27 57 ↓ H 4 1/2 → 18 48
BBEU
10 40 ← V 4 1/2 → 35 05
25 55 ← H 4 1/2 → 20 50
BWF
08 38 ← V 4 1/2 → 37 07
23 53 ← H 4 1/2 → 22 52
BWED
05 35 ← V 4 1/2 → 40 10
20 50 ← H 4 1/2 → 25 55
BGB
46-53 16-23 ↓ 1 ↗ 13-19 43-49
30-37 00-07 ↓ 2 ↗ 58 28
35 05 ↓ 25 ↗ 02 32
02 32 ← V 4 1/2 → 42-44 12-14
16-18 46-48 ← H 4 1/2 → 27-29 57-59
BOLS
13 43 ↓ 9 ↑ 17 47
BWES
05 35 ↓ W 4 1/2 ↑ 36 06
15 45 ↓ V 4 1/2 ↑ 30 00
30 00 ↓ H 4 1/2 ↑ 15 45
BHUM
55 25 → 1 ↑ 11 41
39 09 → 2 ↑ 56 26
36 06 → 25 ↑ 00 30
BNB
58 28 ↓ 1 ← 09 39
42 12 ↓ 2 ← 54 24
39 09 ↓ 25 ← 57 27
BHST
15 45 ↓ 9 ↑ 14 44
BMN
07 37 ↓ W 4 1/2 ↑ 35 05
17 47 ↓ V 4 1/2 ↑ 28 58
32 02 ↓ H 4 1/2 ↑ 13 43
BORS
00 30 ↓ 1 ↑ 07 37
44 14 ↓ 2 ↑ 52 22
41 11 ↓ 25 ↑ 55 25
BWKRR
08-10 38-40 ↓ W 4 1/2 ↑ 33 03
18-25 48-55 ↓ V 4 1/2 ↑ 17-26 47-56
34 04 ↓ H 4 1/2 ↑ 11 41
BWKS
23-30 53-00 ↙ 7 → 35 05
08-10 38-40 ← 9 → 20 50
BCHS
21 51 ← 7 → 37 07
06 36 ← 9 → 22 52
BSAP
19 49 ← 7 ↓ 39 09
04 34 ← 9 ↓ 24 54
BBEV
09 39 ↓ 7 → 51 21
54 24 ↓ 9 → 36 06
BHBF
06 36 ← 7 → 53 23
51 21 ← 9 → 38 08
BFST
34 34 ← 7 → 56 26
49 19 ← 9 → 41 11
BFSTT
01-06 31-36 ↓ 1 ↑ 00-05 30-35
45-50 15-20 ↓ 2 ↑ 50 20
43 13 ↓ 25 ↑ 53 23
BMS
18 48 → 9 ↑ 12 42
BGWD
33 03 ↓ 7 ↗ 32 02
BHAL
11 41 ↓ W 4 1/2 ↑ 31 01
26 56 ↓ V 4 1/2 ↑ 16 46
35 05 ↓ H 4 1/2 ↑ 09 39
BZOS
12-17 42-47 ↑ 7 → 41-47 11-17
57-02 27-32 ↑ 9 → 26-32 56-02
BTGN
11 41 ← 7 ↑ 49 19
56 26 ← 9 ↑ 34 04
BPOP
09 39 ↘ 1 → 56 26
54 24 ↘ 2 → 46 16
47 17 ↘ 25 → 49 19
BTOR
07 37 ← 1 ↑ 58 28
52 22 ← 2 ↑ 48 18
45 15 ← 25 ↑ 51 21
BHO
13 43 ↓ W 4 1/2 ↑ 29 59
28 58 ↓ V 4 1/2 ↑ 14 44
BJLB
16 46 ↓ 1 → 50 20
BGGS
15 45 ← 1 → 51 21
BYOR
59 29 ↓ 2 → 41 11
52 22 ↓ 25 → 44 14
BAHU
12 42 ← 1 ↖ 54 24
56 26 ← 2 ↖ 44 14
49 19 ← 25 ↖ 47 17
BNIS
40 10 ↓ 7 ↑ 25 55
BNIW
39 09 ↓ 1 ↘ 26 56
BHEI
27 57 ↑ W 4 1/2 → 15 45
12 42 ↑ V 4 1/2 → 30 00
BBUP
25 55 ← W 4 1/2 → 17 47
10 40 ← V 4 1/2 → 32 02
BIP
23 53 ← W 4 1/2 → 19 49
08 38 ← V 4 1/2 → 34 04
BSGR
16-22 46-52 ← W 4 1/2 → 21 51
07 37 ← V 4 1/2 → 36 06
BSGV
18 48 ↙ 1 ↑ 46-48 16-18
BSKR
15 45 ← W ↔ V 4 1/2 → 22-24 52-54
05 35 ← V ↔ H 4 1/2 → 37-40 07-10
01 30 |← 46 → 27 57
BSKV
02 32 ↓ 2 ↑ 38 08
54 24 ↓ 25 ↑ 41 11
BWSS
41 11 ↓ 1 ↑ 24 54
43 13 ↓ 7 ↑ 22 52
BSLS
37 07 ↖ 1 → 28 58
BMEX
30 00 ↓ 1 ← 35 05
BZD
33 03 ↓ 1 ↑ 32 02
BFRU
20 50 ↓ 1 ↗ 45 15
BFB
22 52 ↓ 1 ↑ 43 13
BSDE
59 29 ↓ 25 → 36 06
BLAK
01 31 ↓ 25 ↑ 34 04
BPRS
04 34 → 2 ↑ 36 06
57 27 ← 25 ↑ 39 09
BATS
06 36 ↓ 2 ← 33 03
BMF
10 40 ↓ 2 ↑ 30 00
BGRI
48 18 ↓ 7 ↑ 17 47
BBAB
52 22 ↓ 7 ↑ 13 43
BSDG
35 05 ↓ 1 ↑ 30 00
BLWE
37 07 → 1 ↑ 28 58
BRST
24 54 ↓ 1 ↑ 41 11
BBGT
26 56 ← 1 ↑ 39 09
BLIO
03 33 ↓ 25 ↑ 32 02
BOSS
05 35 ↓ 25 ↑ 30 00
BBCH
12 42 ↓ 2 ↑ 28 58
BSC
14 44 ↓ 2 ↑ 26 56
BPDH
55 25 ↓ 7 ↑ 10 40
BLIS
07 37 ↓ 25 ↑ 28 58
BTLS
11 41 ↓ 25 ↑ 25 55
BLRD
16 46 ↓ 2 ↑ 24 54
BMAH
20 50 ↓ 2 ↑ 20 50
BBFD
23 53 ↓ 2 ↑ 17 47

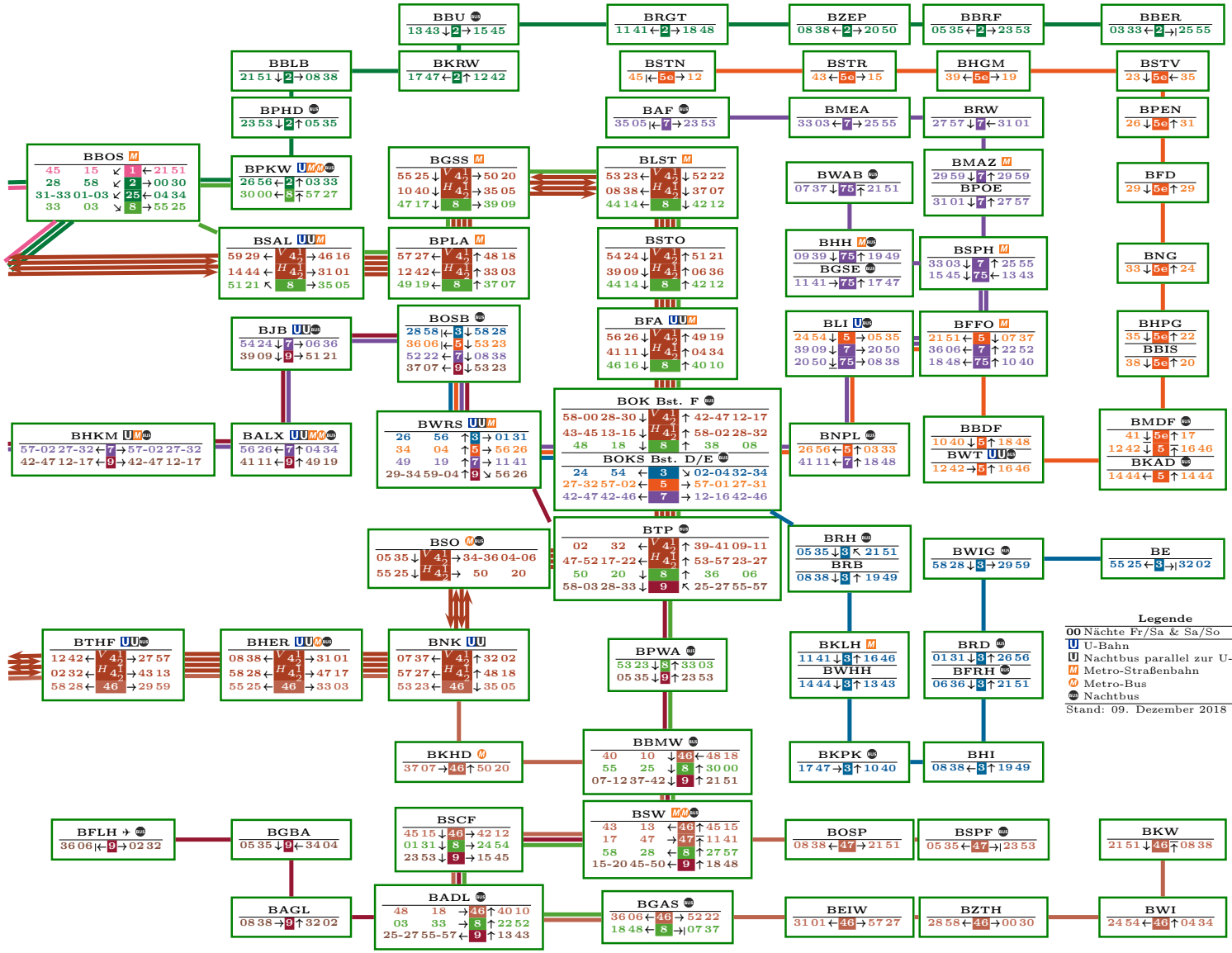
BBU
13 43 ↓ 2 → 15 45
BRGT
11 41 ← 2 → 18 48
BZEP
08 38 ← 2 → 20 50
BBRF
05 35 ← 2 → 23 53
BBER
03 33 ← 2 →| 25 55
BBLB
21 51 ↓ 2 → 08 38
BKRW
17 47 ← 2 ↑ 12 42
BSTN
45 |← 5e → 12
BSTR
43 ← 5e → 15
BHGM
39 ← 5e → 19
BSTV
23 ↓ 5e ← 35
BPHD
23 53 ↓ 2 ↑ 05 35
BAF
35 05 |← 7 → 23 53
BMEA
33 03 ← 7 → 25 55
BRW
27 57 ↓ 7 ← 31 01
BPEN
26 ↓ 5e ↑ 31
BBOS M
45 15 ↙ 1 ← 21 51
28 58 ↙ 2 → 00 30
31-33 01-03 ↙ 25 ← 04 34
33 03 ↘ 8 → 55 25
BPKW U M M
26 56 ← 2 ↑ 03 33
30 00 ← 8 ↑ 57 27
BGSS M
55 25 ↓ V 4 1/2 → 50 20
10 40 ↓ H 4 1/2 → 35 05
47 17 ↓ 8 → 39 09
BLST M
53 23 ← V 4 1/2 ↓ 52 22
08 38 ← H 4 1/2 ↓ 37 07
44 14 ← 8 ↓ 42 12
BWAB
07 37 ↓ 75 ↑ 21 51
BMAZ M
29 59 ↓ 7 ↑ 29 59
BPOE
31 01 ↓ 7 ↑ 27 57
BFD
29 ↓ 5e ↑ 29
BSAL U U M
59 29 ← V 4 1/2 → 46 16
14 44 ← H 4 1/2 → 31 01
51 21 ↖ 8 → 35 05
BPLA M
57 27 ← V 4 1/2 ↑ 48 18
12 42 ← H 4 1/2 ↑ 33 03
49 19 ← 8 ↑ 37 07
BSTO
54 24 ↓ V 4 1/2 ↑ 51 21
39 09 ↓ H 4 1/2 ↑ 06 36
44 14 ↓ 8 ↑ 42 12
BHH M
09 39 ↓ 75 ↑ 19 49
BGSE
11 41 → 75 ↑ 17 47
BSPH M
33 03 ↓ 7 ↑ 25 55
15 45 ↓ 75 ← 13 43
BNG
33 ↓ 5e ↑ 24
BJB U U
54 24 ↓ 7 → 06 36
39 09 ↓ 9 → 51 21
BOSB
28 58 |← 3 ↓ 58 28
36 06 |← 5 ↓ 53 23
52 22 ← 7 ↓ 08 38
37 07 ← 9 ↓ 53 23
BFA U U M
56 26 ↓ V 4 1/2 ↑ 49 19
41 11 ↓ H 4 1/2 ↑ 04 34
46 16 ↓ 8 ↑ 40 10
BLI U
24 54 ↓ 5 → 05 35
39 09 ↓ 7 → 20 50
20 50 ↓ 75 → 08 38
BFFO M
21 51 ← 5 ↓ 07 37
36 06 ← 7 ↑ 22 52
18 48 ← 75 ↑ 10 40
BHPG
35 ↓ 5e ↑ 22
BBIS
38 ↓ 5e ↑ 20
BHKM U M
57-02 27-32 ← 7 → 57-02 27-32
42-47 12-17 ← 9 → 42-47 12-17
BALX U U M M
56 26 ← 7 ↑ 04 34
41 11 ← 9 ↑ 49 19
BWRS U U M
26 56 ↑ 3 → 01 31
34 04 ↑ 5 → 56 26
49 19 ↑ 7 → 11 41
29-34 59-04 ↑ 9 ↘ 56 26
BOK Bst. F
58-00 28-30 ↓ V 4 1/2 ↑ 42-47 12-17
43-45 13-15 ↓ H 4 1/2 ↑ 58-02 28-32
48 18 ↓ 8 ↑ 38 08
BOKS Bst. D/E
24 54 ← 3 ↘ 02-04 32-34
27-32 57-02 ← 5 → 57-01 27-31
42-47 42-46 ← 7 → 12-16 42-46
BNPL
26 56 ← 5 ↑ 03 33
41 11 ← 7 ↑ 18 48
BBDF
10 40 ↓ 3 ↑ 18 48
BWT U U
12 42 → 3 ↑ 16 46
BMDF
41 ↓ 5e ↑ 17
12 42 ↓ 5 ↑ 16 46
BKAD
14 44 ← 5 ↑ 14 44
BSO M
05 35 ↓ V 4 1/2 → 34-36 04-06
55 25 ↓ H 4 1/2 → 50 20
BTP
02 32 ← V 4 1/2 ↑ 39-41 09-11
47-52 17-22 ← H 4 1/2 ↑ 53-57 23-27
50 20 ↓ 8 ↑ 36 06
58-03 28-33 ↓ 9 ↖ 25-27 55-57
BRH
05 35 ↓ 3 ↖ 21 51
BRB
08 38 ↓ 3 ↑ 19 49
BWIG
58 28 ↓ 3 → 29 59
BE
55 25 ← 3 →| 32 02
BTHF U U
12 42 ← V 4 1/2 → 27 57
02 32 ← H 4 1/2 → 43 13
58 28 ← 46 → 29 59
BHER U U M M
08 38 ← V 4 1/2 → 31 01
58 28 ← H 4 1/2 → 47 17
55 25 ← 46 → 33 03
BNK U U
07 37 ← V 4 1/2 ↑ 32 02
57 27 ← H 4 1/2 ↑ 48 18
53 23 ← 46 ↓ 35 05
BPWA
53 23 ↓ 8 ↑ 33 03
05 35 ↓ 9 ↑ 23 53
BKLH M
11 41 ↓ 3 ↑ 16 46
BWHH
14 44 ↓ 3 ↑ 13 43
BRD
01 31 ↓ 3 ↑ 26 56
BFRH
06 36 ↓ 3 ↑ 21 51
BKHD M
37 07 → 46 ↑ 50 20
BBMW
40 10 ↓ 46 ← 48 18
55 25 ↓ 8 ↑ 30 00
07-12 37-42 ↓ 9 ↑ 21 51
BKPK
17 47 → 3 ↑ 10 40
BHI
08 38 ← 3 ↑ 19 49
BFLH ✈
36 06 |← 9 → 02 32
BGBA
05 35 ↓ 9 ← 34 04
BSCF
45 15 ↓ 46 → 42 12
01 31 ↓ 8 → 24 54
23 53 ↓ 9 → 15 45
BSW M M
43 13 ← 46 ↑ 45 15
17 47 → 47 ↑ 11 41
58 28 ← 8 ↑ 27 57
15-20 45-50 ← 9 ↑ 18 48
BOSP
08 38 ← 47 → 21 51
BSPF
05 35 ← 47 →| 23 53
BKW
21 51 ↓ 46 ↑ 08 38
BAGL
08 38 → 9 ↑ 32 02
BADL
48 18 → 46 ↑ 40 10
03 33 → 8 ↑ 22 52
25-27 55-57 ← 9 ↑ 13 43
BGAS
36 06 ← 46 → 52 22
18 48 ← 8 →| 07 37
BEIW
31 01 ← 46 → 57 27
BZTH
28 58 ← 46 → 00 30
BWI
24 54 ← 46 ↑ 04 34
Legende
00 Nächte Fr/Sa & Sa/So
U U-Bahn
U Nachtbus parallel zur U-Bahn
M Metro-Straßenbahn
M Metro-Bus
Nachtbus
Stand: 09. Dezember 2018

| S1 (Fr/Sa) | | | | S1 (Sa/So) | | | | S1 (Fr/Sa) | | | | S1 (Sa/So) | | | |
|---|---|---|---|---|---|---|---|---|---|---|---|---|---|---|---|
| BWSS | 00:54 | 30 | 04:24 | 00:54 | 30 | 06:24 | | BORB | 01:11 | 30 | 03:41 | 01:11 | 30 | 05:41 | |
| BORB | 02:25 | | 05:55 | 02:25 | | 07:55 | | BWSS | 02:41 | | 05:11 | 02:41 | | 07:11 | |

| S2 (Fr/Sa) | | | | S2 (Sa/So) | | | | S2 (Fr/Sa) | | | | S2 (Sa/So) | | | |
|---|---|---|---|---|---|---|---|---|---|---|---|---|---|---|---|
| BBFD | 00:47 | 30 | 04:17 | 00:47 | 30 | 06:17 | | BBER | 01:03 | 30 | 03:03 | 01:03 | 30 | 05:03 | |
| BBER | 01:55 | | 05:25 | 01:55 | | 07:25 | | BBFD | 02:23 | | 04:23 | 02:23 | | 06:23 | |

| S25 (Fr/Sa) | | | | S25 (Sa/So) | | | | S25 (Fr/Sa) | | | | S25 (Sa/So) | | | |
|---|---|---|---|---|---|---|---|---|---|---|---|---|---|---|---|
| BTLS | 00:55 | 30 | 04:25 | 00:55 | 30 | 05:55 | | BHD | 01:08 | 30 | 04:38 | 01:08 | 30 | 06:38 | |
| BHD | 01:57 | | 05:27 | 01:57 | | 06:57 | | BTLS | 02:11 | | 05:41 | 02:11 | | 07:41 | |

| S5 (Fr/Sa) | | | | S5 (Sa/So) | | | | S5 (Fr/Sa) | | | | S5 (Sa/So) | | | |
|---|---|---|---|---|---|---|---|---|---|---|---|---|---|---|---|
| BMDF | 01:12 | 30 | 04:12 | 01:12 | 30 | 06:12 | | BOSB | 01:23 | 30 | 04:23 | 01:23 | 30 | 06:23 | |
| BOSB | 01:36 | | 04:36 | 01:36 | | 06:36 | | BMDF | 01:46 | | 04:46 | 01:46 | | 06:46 | |

| S7 (Fr/Sa) | | | | S7 (Sa/So) | | | | S7 (Fr/Sa) | | | | S7 (Sa/So) | | | |
|---|---|---|---|---|---|---|---|---|---|---|---|---|---|---|---|
| BAF | 01:23 | 30 | 03:53 | 01:23 | 30 | 05:53 | | BPDH | 00:40 | 30 | 03:40 | 00:40 | 30 | 05:40 | |
| BPDH | 02:55 | | 05:25 | 02:55 | | 07:25 | | BAF | 02:05 | | 05:05 | 02:05 | | 07:05 | |

| S75 (Fr/Sa) | | | | S75 (Sa/So) | | | | S75 (Fr/Sa) | | | | S75 (Sa/So) | | | |
|---|---|---|---|---|---|---|---|---|---|---|---|---|---|---|---|
| BWAB | 01:37 | 30 | 04:07 | 01:37 | 30 | 06:07 | | BLI | 01:38 | 30 | 04:38 | 01:38 | 30 | 06:38 | |
| BLI | 01:50 | | 04:20 | 01:50 | | 06:20 | | BWAB | 01:51 | | 04:51 | 01:51 | | 06:51 | |

| S3 (Fr/Sa) | | | | S3 (Sa/So) | | | | S3 (Fr/Sa) | | | | S3 (Sa/So) | | | |
|---|---|---|---|---|---|---|---|---|---|---|---|---|---|---|---|
| BE | 00:55 | 30 | 03:55 | 00:55 | 30 | 05:55 | | BOSB | 01:28 | 30 | 04:58 | 01:34 | 30 | 06:58 | |
| BOSB | 01:28 | | 04:28 | 01:28 | | 06:28 | | BE | 02:02 | | 05:32 | 02:02 | | 07:32 | |

| S9 (Fr/Sa) | | | | S9 (Sa/So) | | | | S9 (Fr/Sa) | | | | S9 (Sa/So) | | | |
|---|---|---|---|---|---|---|---|---|---|---|---|---|---|---|---|
| BFLH | 01:02 | 30 | 04:02 | 01:02 | 30 | 06:02 | | BSPA | 01:06 | 30 | 03:06 | 01:06 | 30 | 03:06 | |
| BSPA | 02:24 | | 05:24 | 02:24 | | 07:24 | | BFLH | 02:36 | | 04:36 | 02:36 | | 06:36 | |

| S5 (Fr/Sa) | | | | | S5 (Sa/So) | | | | S5 (Fr/Sa) | | | | S5 (Sa/So) | | | |
|---|---|---|---|---|---|---|---|---|---|---|---|---|---|---|---|---|
| BSTN | | | 01:09 | 02:12 | 03:12 | | | 01:09 | 02:12 | 30 | 05:12 | BMDF | 02:17 | 30 | 04:17 | 02:17 | 30 | 06:17 |
| BST | 00:40 | | 01:23 | 02:23 | 03:23 | | 00:40 | 01:23 | 02:23 | | 05:23 | BST | 02:35 | | 04:35 | 02:35 | | 06:35 |
| BMDF | 01:00 | | 01:41 | 02:41 | 03:41 | | 01:00 | 01:41 | 02:41 | | 05:41 | BSTN | 02:45 | | 04:45 | 02:45 | | 06:45 |

| S8 (Fr/Sa) | | | | S8 (Sa/So) | | | | S8 (Fr/Sa) | | | | S8 (Sa/So) | | | |
|---|---|---|---|---|---|---|---|---|---|---|---|---|---|---|---|
| BGAS | 00:48 | 30 | 03:48 | 00:48 | 30 | 03:48 | | BPKW | 01:30 | 30 | 04:30 | 01:30 | 30 | 04:30 | |
| BPKW | 01:26 | | 04:26 | 01:26 | | 04:26 | | BGAS | 02:07 | | 05:07 | 02:07 | | 05:07 | |

| S46 (Fr/Sa) | | | | S46 (Sa/So) | | | | S46 (Fr/Sa) | | | | S46 (Sa/So) | | | |
|---|---|---|---|---|---|---|---|---|---|---|---|---|---|---|---|
| BKW | 00:51 | 30 | 04:21 | 00:51 | 30 | 05:51 | | BSKR | 01:27 | 30 | 03:57 | 01:27 | 30 | 03:57 | |
| BSKR | 01:30 | | 05:00 | 01:30 | | 06:30 | | BKW | 02:08 | | 04:38 | 02:08 | | 04:38 | |

| S47 (Fr/Sa) | | | | S47 (Sa/So) | | | | S47 (Fr/Sa) | | | | S47 (Sa/So) | | | |
|---|---|---|---|---|---|---|---|---|---|---|---|---|---|---|---|
| BSPF | 01:35 | 30 | 04:35 | 01:35 | 30 | 06:35 | | BSW | 01:47 | 30 | 04:47 | 01:47 | 30 | 06:47 | |
| BSW | 01:41 | | 04:41 | 01:41 | | 06:41 | | BSPF | 01:53 | | 04:53 | 01:53 | | 06:53 | |

## S41 A (Fr/Sa)

| von | | | | | | | | | | | | | | | | | | | | | | | | | | | | |
|---|---|---|---|---|---|---|---|---|---|---|---|---|---|---|---|---|---|---|---|---|---|---|---|---|---|---|---|---|
| BSKR | 00:26 | 00:36 | 00:46 | 00:56 | 01:06 | 01:16 | | 01:35 | 01:46 | | 02:05 | 02:15 | | 02:35 | 02:45 | | 03:05 | 03:15 | | 03:35 | 03:45 | | 04:05 | 04:15 | 04:35 | 04:46 | 04:56 | 05:06 |
| BSGR o | 00:27 | 00:37 | 00:47 | 00:57 | 01:07 | 01:17 | | 01:36 | 01:47 | | 02:06 | 02:16 | | 02:36 | 02:46 | | 03:06 | 03:16 | | 03:36 | 03:46 | | 04:06 | 04:16 | 04:36 | 04:47 | 04:57 | 05:06 |
| BSGR | 00:28 | 00:38 | 00:48 | 00:58 | 01:08 | 01:22 | | 01:37 | 01:52 | | 02:07 | 02:22 | | 02:37 | 02:52 | | 03:07 | 03:22 | | 03:37 | 03:52 | | 04:07 | 04:22 | 04:37 | 04:48 | 04:58 | 05:07 |
| BHAL | 00:37 | 00:47 | 00:57 | 01:07 | 01:17 | 01:31 | 01:39 | 01:46 | 02:01 | 02:09 | 02:16 | 02:31 | 02:39 | 02:46 | 03:01 | 03:09 | 03:16 | 03:31 | 03:39 | 03:46 | 04:01 | 04:09 | 04:16 | 04:31 | 04:46 | 04:57 | 05:07 | 05:16 |
| BWKRR o | 00:38 | 00:48 | 00:58 | 01:08 | 01:18 | 01:32 | 01:40 | 01:47 | 02:02 | 02:10 | 02:17 | 02:32 | 02:40 | 02:47 | 03:02 | 03:10 | 03:17 | 03:32 | 03:40 | 03:47 | 04:02 | 04:10 | 04:17 | 04:32 | 04:47 | 04:58 | 05:08 | 05:17 |
| BWKRR | 00:39 | 00:49 | 00:59 | 01:11 | 01:26 | 01:33 | 01:41 | 01:56 | 02:03 | 02:11 | 02:26 | 02:33 | 02:41 | 02:56 | 03:03 | 03:11 | 03:26 | 03:33 | 03:41 | 03:56 | 04:03 | 04:11 | 04:26 | 04:39 | 04:49 | 04:59 | 05:09 | 05:19 |
| BWES | 00:42 | 00:52 | 01:02 | 01:15 | 01:30 | 01:36 | 01:45 | 02:00 | 02:06 | 02:15 | 02:30 | 02:36 | 02:45 | 03:00 | 03:06 | 03:15 | 03:30 | 03:36 | 03:45 | 04:00 | 04:06 | 04:15 | 04:30 | 04:42 | 04:52 | 05:02 | 05:12 | 05:22 |
| BGB o | 00:55 | 01:05 | 01:15 | 01:27 | 01:42 | | 01:57 | 02:12 | | 02:27 | 02:42 | | 02:57 | 03:12 | | 03:27 | 03:42 | | 03:57 | 04:12 | | 04:27 | 04:42 | 04:55 | 05:05 | 05:15 | 05:25 | 05:35 |
| BGB | 00:59 | | 01:15 | 01:29 | 01:44 | | 01:59 | 02:14 | | 02:29 | 02:44 | | 02:59 | 03:14 | | 03:29 | 03:44 | | 03:59 | 04:14 | | 04:29 | 04:45 | 04:55 | 05:05 | 05:15 | 05:25 | 05:35 |
| BOK o | 01:13 | | 01:30 | 01:43 | 01:58 | | 02:13 | 02:28 | | 02:43 | 02:58 | | 03:13 | 03:28 | | 03:43 | 03:58 | | 04:13 | 04:28 | | 04:43 | 05:00 | 05:10 | 05:20 | 05:30 | 05:40 | 05:50 |
| BOK | 01:15 | | 01:31 | 01:45 | 02:00 | | 02:15 | 02:30 | | 02:45 | 03:00 | | 03:15 | 03:30 | | 03:45 | 04:00 | | 04:15 | 04:30 | | 04:45 | 05:01 | 05:11 | 05:21 | 05:31 | 05:41 | 05:51 |
| BTP o | 01:17 | | 01:32 | 01:47 | 02:01 | | 02:17 | 02:31 | | 02:47 | 03:01 | | 03:17 | 03:31 | | 03:47 | 04:01 | | 04:17 | 04:31 | | 04:47 | 05:02 | 05:12 | 05:22 | 05:32 | 05:42 | 05:52 |
| BTP | 01:22 | | 01:33 | 01:52 | 02:02 | | 02:22 | 02:32 | | 02:52 | 03:02 | | 03:22 | 03:32 | | 03:52 | 04:02 | | 04:22 | 04:32 | | 04:52 | 05:03 | 05:13 | 05:23 | 05:33 | 05:43 | 05:53 |
| BSKR o | 01:34 | | 01:45 | 02:04 | 02:14 | | 02:34 | 02:44 | | 03:04 | 03:14 | | 03:34 | 03:44 | | 04:04 | 04:14 | | 04:34 | 04:44 | | 05:04 | 05:15 | 05:25 | 05:35 | 05:45 | 05:55 | 05:05 |
| nach | | | WES | | WES | | | WES | | | WES | | | WES | | | | | | | | | | | | | | |

## S41 A (Sa/So)

| von | | | | | | | | | | | | | | | | | | | | | | | | | | | | |
|---|---|---|---|---|---|---|---|---|---|---|---|---|---|---|---|---|---|---|---|---|---|---|---|---|---|---|---|---|
| BSKR | 00:26 | 00:46 | 00:56 | 01:06 | 01:16 | | 01:35 | 01:46 | | 02:05 | 02:15 | | 02:35 | 02:45 | | 03:05 | 03:15 | | 03:35 | 03:45 | | 04:05 | 04:15 | 04:35 | 04:45 | 05:05 | 05:15 | 05:35 | 05:45 |
| BSGR o | 00:27 | 00:47 | 00:57 | 01:07 | 01:17 | | 01:36 | 01:47 | | 02:06 | 02:16 | | 02:36 | 02:46 | | 03:06 | 03:16 | | 03:36 | 03:46 | | 04:06 | 04:16 | 04:36 | 04:46 | 05:06 | 05:16 | 05:36 | 05:46 |
| BSGR | 00:28 | 00:48 | 00:58 | 01:08 | 01:22 | | 01:37 | 01:52 | | 02:07 | 02:22 | | 02:37 | 02:52 | | 03:07 | 03:22 | | 03:37 | 03:52 | | 04:07 | 04:22 | 04:37 | 04:52 | 05:07 | 05:22 | 05:37 | 05:52 |
| BHAL | 00:37 | 00:57 | 01:07 | 01:17 | 01:31 | 01:39 | 01:46 | 02:01 | 02:09 | 02:16 | 02:31 | 02:39 | 02:46 | 03:01 | 03:09 | 03:16 | 03:31 | 03:39 | 03:46 | 04:01 | 04:09 | 04:16 | 04:31 | 04:46 | 05:01 | 05:16 | 05:31 | 05:46 | 06:01 |
| BWKRR o | 00:38 | 00:58 | 01:08 | 01:18 | 01:32 | 01:40 | 01:47 | 02:02 | 02:10 | 02:17 | 02:32 | 02:40 | 02:47 | 03:02 | 03:10 | 03:17 | 03:32 | 03:40 | 03:47 | 04:02 | 04:10 | 04:17 | 04:32 | 04:47 | 05:02 | 05:17 | 05:32 | 05:47 | 06:02 |
| BWKRR | 00:39 | 00:59 | 01:11 | 01:26 | 01:33 | 01:41 | 01:56 | 02:03 | 02:11 | 02:26 | 02:33 | 02:41 | 02:56 | 03:03 | 03:11 | 03:26 | 03:33 | 03:41 | 03:56 | 04:03 | 04:11 | 04:26 | 04:41 | 04:56 | 05:11 | 05:26 | 05:41 | 05:56 | 06:09 |
| BWES | 00:42 | 01:02 | 01:15 | 01:30 | 01:36 | 01:45 | 02:00 | 02:06 | 02:15 | 02:30 | 02:36 | 02:45 | 03:00 | 03:06 | 03:15 | 03:30 | 03:36 | 03:45 | 04:00 | 04:06 | 04:15 | 04:30 | 04:45 | 05:00 | 05:15 | 05:30 | 05:45 | 06:00 | 06:12 |
| BGB o | 00:55 | 01:15 | 01:27 | 01:42 | | 01:57 | 02:12 | | 02:27 | 02:42 | | 02:57 | 03:12 | | 03:27 | 03:42 | | 03:57 | 04:12 | | 04:27 | 04:42 | 04:57 | 05:12 | 05:27 | 05:42 | 05:57 | 06:12 | 06:25 |
| BGB | 00:59 | 01:15 | 01:29 | 01:44 | | 01:59 | 02:14 | | 02:29 | 02:44 | | 02:59 | 03:14 | | 03:29 | 03:44 | | 03:59 | 04:14 | | 04:29 | 04:44 | 04:59 | 05:14 | 05:29 | 05:44 | 05:59 | 06:14 | 06:25 |
| BOK o | 01:13 | 01:30 | 01:43 | 01:58 | | 02:13 | 02:28 | | 02:43 | 02:58 | | 03:13 | 03:28 | | 03:43 | 03:58 | | 04:13 | 04:28 | | 04:43 | 04:58 | 05:13 | 05:28 | 05:43 | 05:58 | 06:13 | 06:28 | 06:40 |
| BOK | 01:15 | 01:31 | 01:45 | 02:00 | | 02:15 | 02:30 | | 02:45 | 03:00 | | 03:15 | 03:30 | | 03:45 | 04:00 | | 04:15 | 04:30 | | 04:45 | 05:00 | 05:15 | 05:30 | 05:45 | 06:00 | 06:15 | 06:30 | 06:41 |
| BTP o | 01:17 | 01:32 | 01:47 | 02:01 | | 02:17 | 02:31 | | 02:47 | 03:01 | | 03:17 | 03:31 | | 03:47 | 04:01 | | 04:17 | 04:31 | | 04:47 | 05:01 | 05:17 | 05:31 | 05:47 | 06:01 | 06:17 | 06:31 | 06:42 |
| BTP | 01:22 | 01:33 | 01:52 | 02:02 | | 02:22 | 02:32 | | 02:52 | 03:02 | | 03:22 | 03:32 | | 03:52 | 04:02 | | 04:22 | 04:32 | | 04:52 | 05:02 | 05:22 | 05:32 | 05:52 | 06:02 | 06:22 | 06:33 | 06:43 |
| BSKR o | 01:34 | 01:45 | 02:04 | 02:14 | | 02:34 | 02:44 | | 03:04 | 03:14 | | 03:34 | 03:44 | | 04:04 | 04:14 | | 04:34 | 04:44 | | 05:04 | 05:14 | 05:34 | 05:44 | 06:04 | 06:14 | 06:34 | 06:45 | 06:55 |
| nach | | WES | | WES | | | WES | | | WES | | | WES | | | | | | | | | | | | | | | |

## S42 R (Fr/Sa)

| von | | | | | | | | | | | | | | | | | | | | | | | | | | | | | | |
|---|---|---|---|---|---|---|---|---|---|---|---|---|---|---|---|---|---|---|---|---|---|---|---|---|---|---|---|---|---|---|
| BSKR | 00:20 | 00:30 | 00:40 | 00:50 | 01:00 | 01:10 | | 01:24 | 01:40 | | 01:54 | 02:10 | | 02:24 | 02:40 | | 02:54 | 03:10 | | 03:24 | 03:40 | 03:54 | 04:10 | 04:24 | | 04:40 | 04:54 | | | | | | |
| BTP o | 00:33 | 00:43 | 00:53 | 01:03 | 01:13 | 01:23 | | 01:39 | 01:54 | | 02:09 | 02:24 | | 02:39 | 02:54 | | 03:09 | 03:24 | | 03:39 | 03:54 | 04:09 | 04:24 | 04:39 | | 04:54 | 05:09 | | | | | | |
| BTP | 00:33 | 00:43 | 00:53 | 01:03 | 01:13 | 01:27 | | 01:41 | 01:57 | | 02:11 | 02:27 | | 02:41 | 02:57 | | 03:11 | 03:27 | | 03:41 | 03:57 | 04:11 | 04:27 | 04:41 | | 04:57 | 05:11 | | | | | | |
| BOK o | 00:35 | 00:45 | 00:55 | 01:05 | 01:15 | 01:28 | | 01:42 | 01:58 | | 02:12 | 02:28 | | 02:42 | 02:58 | | 03:12 | 03:28 | | 03:42 | 03:58 | 04:12 | 04:28 | 04:42 | | 04:58 | 05:12 | | | | | | |
| BOK | 00:36 | 00:46 | 00:56 | 01:06 | 01:16 | 01:32 | | 01:47 | 02:02 | | 02:17 | 02:32 | | 02:47 | 03:02 | | 03:17 | 03:32 | | 03:47 | 04:02 | 04:17 | 04:32 | 04:46 | | 05:02 | 05:16 | | | | | | |
| BGB o | 00:50 | 01:00 | 01:10 | 01:20 | 01:30 | 01:46 | | 02:01 | 02:16 | | 02:31 | 02:46 | | 03:01 | 03:16 | | 03:31 | 03:46 | | 04:01 | 04:16 | 04:31 | 04:46 | 05:00 | | 05:16 | 05:30 | | | | | | |
| BGB | 00:51 | 01:01 | 01:11 | 01:21 | 01:31 | 01:48 | | 02:02 | 02:18 | | 02:32 | 02:48 | | 03:02 | 03:18 | | 03:32 | 03:48 | | 04:02 | 04:18 | 04:32 | 04:48 | 05:01 | | 05:18 | 05:31 | | | | | | |
| BWES | 01:03 | 01:13 | 01:23 | 01:33 | 01:43 | 02:00 | 02:05 | 02:15 | 02:30 | 02:35 | 02:45 | 03:00 | 03:05 | 03:15 | 03:30 | 03:35 | 03:45 | 04:00 | 04:05 | 04:15 | 04:30 | 04:45 | 05:00 | 05:13 | 05:23 | 05:30 | 05:43 | | | | | | |
| BWKRR o | 01:07 | 01:17 | 01:27 | 01:37 | 01:47 | 02:03 | 02:08 | 02:18 | 02:33 | 02:38 | 02:48 | 03:03 | 03:08 | 03:18 | 03:33 | 03:38 | 03:48 | 04:03 | 04:08 | 04:18 | 04:33 | 04:48 | 05:03 | 05:17 | 05:27 | 05:33 | 05:47 | | | | | | |
| BWKRR | 01:10 | 01:25 | 01:27 | 01:40 | 01:55 | 02:04 | 02:10 | 02:25 | 02:34 | 02:40 | 02:55 | 03:04 | 03:10 | 03:25 | 03:34 | 03:40 | 03:55 | 04:04 | 04:10 | 04:25 | 04:40 | 04:55 | 05:07 | 05:17 | 05:27 | 05:37 | 05:47 | | | | | | |
| BHAL | 01:11 | 01:26 | 01:28 | 01:41 | 01:56 | 02:05 | 02:11 | 02:26 | 02:35 | 02:41 | 02:56 | 03:05 | 03:11 | 03:26 | 03:35 | 03:41 | 03:56 | 04:05 | 04:11 | 04:26 | 04:41 | 04:56 | 05:09 | 05:19 | 05:29 | 05:39 | 05:49 | | | | | | |
| BSGR o | 01:20 | 01:35 | | 01:50 | 02:05 | | 02:20 | 02:35 | | 02:50 | 03:05 | | 03:20 | 03:35 | | 03:50 | 04:05 | | 04:20 | 04:35 | 04:50 | 05:05 | 05:18 | 05:28 | 05:38 | 05:48 | 05:58 | | | | | | |
| BSGR | 01:21 | 01:36 | | 01:51 | 02:06 | | 02:21 | 02:36 | | 02:51 | 03:06 | | 03:21 | 03:36 | | 03:51 | 04:06 | | 04:21 | 04:36 | 04:51 | 05:06 | 05:18 | 05:28 | 05:38 | 05:48 | 05:58 | | | | | | |
| BSKR o | 01:22 | 01:37 | | 01:52 | 02:07 | | 02:22 | 02:37 | | 02:52 | 03:07 | | 03:22 | 03:37 | | 03:52 | 04:07 | | 04:22 | 04:37 | 04:52 | 05:07 | 05:20 | 05:30 | 05:40 | 05:50 | 06:00 | | | | | | |
| nach | | HAL | | | HAL | | | HAL | | | HAL | | | | | | | | | | | | | | | | | | | | | | |

## S42 R (Sa/So)

| von | | | | | | | | | | | | | | | | | | | | | | | | | | | | | | |
|---|---|---|---|---|---|---|---|---|---|---|---|---|---|---|---|---|---|---|---|---|---|---|---|---|---|---|---|---|---|---|
| BSKR | 00:20 | 00:30 | 00:40 | 00:50 | 01:00 | 01:10 | | 01:24 | 01:40 | | 01:54 | 02:10 | | 02:24 | 02:40 | | 02:54 | 03:10 | | 03:24 | 03:40 | 03:54 | 04:10 | 04:24 | 04:40 | 04:54 | 05:10 | 05:24 | 05:40 | 05:54 | | 06:10 | 06:24 |
| BTP o | 00:33 | 00:43 | 00:53 | 01:03 | 01:13 | 01:23 | | 01:39 | 01:54 | | 02:09 | 02:24 | | 02:39 | 02:54 | | 03:09 | 03:24 | | 03:39 | 03:54 | 04:09 | 04:24 | 04:39 | 04:54 | 05:09 | 05:24 | 05:39 | 05:54 | 06:09 | | 06:24 | 06:39 |
| BTP | 00:33 | 00:43 | 00:53 | 01:03 | 01:13 | 01:27 | | 01:41 | 01:57 | | 02:11 | 02:27 | | 02:41 | 02:57 | | 03:11 | 03:27 | | 03:41 | 03:57 | 04:11 | 04:27 | 04:41 | 04:57 | 05:11 | 05:27 | 05:41 | 05:57 | 06:11 | | 06:27 | 06:41 |
| BOK o | 00:35 | 00:45 | 00:55 | 01:05 | 01:15 | 01:28 | | 01:42 | 01:58 | | 02:12 | 02:28 | | 02:42 | 02:58 | | 03:12 | 03:28 | | 03:42 | 03:58 | 04:12 | 04:28 | 04:42 | 04:58 | 05:12 | 05:28 | 05:42 | 05:58 | 06:12 | | 06:28 | 06:42 |
| BOK | 00:36 | 00:46 | 00:56 | 01:06 | 01:16 | 01:32 | | 01:47 | 02:02 | | 02:17 | 02:32 | | 02:47 | 03:02 | | 03:17 | 03:32 | | 03:47 | 04:02 | 04:17 | 04:32 | 04:47 | 05:02 | 05:17 | 05:32 | 05:47 | 06:02 | 06:16 | | 06:32 | 06:46 |
| BGB o | 00:50 | 01:00 | 01:10 | 01:20 | 01:30 | 01:46 | | 02:01 | 02:16 | | 02:31 | 02:46 | | 03:01 | 03:16 | | 03:31 | 03:46 | | 04:01 | 04:16 | 04:31 | 04:46 | 05:01 | 05:16 | 05:31 | 05:46 | 06:01 | 06:16 | 06:30 | | 06:46 | 07:00 |
| BGB | 00:51 | 01:01 | 01:11 | 01:21 | 01:31 | 01:48 | | 02:02 | 02:18 | | 02:32 | 02:48 | | 03:02 | 03:18 | | 03:32 | 03:48 | | 04:02 | 04:18 | 04:32 | 04:48 | 05:02 | 05:18 | 05:32 | 05:48 | 06:02 | 06:18 | 06:31 | | 06:48 | 07:01 |
| BWES | 01:03 | 01:13 | 01:23 | 01:33 | 01:43 | 02:00 | 02:05 | 02:15 | 02:30 | 02:35 | 02:45 | 03:00 | 03:05 | 03:15 | 03:30 | 03:35 | 03:45 | 04:00 | 04:05 | 04:15 | 04:30 | 04:45 | 05:00 | 05:15 | 05:30 | 05:45 | 06:00 | 06:15 | 06:30 | 06:43 | 06:53 | 07:00 | 07:13 |
| BWKRR o | 01:07 | 01:17 | 01:27 | 01:37 | 01:47 | 02:03 | 02:08 | 02:18 | 02:33 | 02:38 | 02:48 | 03:03 | 03:08 | 03:18 | 03:33 | 03:38 | 03:48 | 04:03 | 04:08 | 04:18 | 04:33 | 04:48 | 05:03 | 05:18 | 05:33 | 05:48 | 06:03 | 06:18 | 06:33 | 06:47 | 06:57 | 07:03 | 07:17 |
| BWKRR | 01:10 | 01:25 | 01:27 | 01:40 | 01:55 | 02:04 | 02:10 | 02:25 | 02:34 | 02:40 | 02:55 | 03:04 | 03:10 | 03:25 | 03:34 | 03:40 | 03:55 | 04:04 | 04:10 | 04:25 | 04:40 | 04:55 | 05:10 | 05:25 | 05:40 | 05:55 | 06:10 | 06:25 | 06:37 | 06:47 | 06:57 | 07:07 | 07:17 |
| BHAL | 01:11 | 01:26 | 01:28 | 01:41 | 01:56 | 02:05 | 02:11 | 02:26 | 02:35 | 02:41 | 02:56 | 03:05 | 03:11 | 03:26 | 03:35 | 03:41 | 03:56 | 04:05 | 04:11 | 04:26 | 04:41 | 04:56 | 05:11 | 05:26 | 05:41 | 05:56 | 06:11 | 06:26 | 06:39 | 06:49 | 06:59 | 07:09 | 07:19 |
| BSGR o | 01:20 | 01:35 | | 01:50 | 02:05 | | 02:20 | 02:35 | | 02:50 | 03:05 | | 03:20 | 03:35 | | 03:50 | 04:05 | | 04:20 | 04:35 | 04:50 | 05:05 | 05:20 | 05:35 | 05:50 | 06:05 | 06:20 | 06:35 | 06:48 | 06:58 | 07:08 | 07:18 | 07:28 |
| BSGR | 01:21 | 01:36 | | 01:51 | 02:06 | | 02:21 | 02:36 | | 02:51 | 03:06 | | 03:21 | 03:36 | | 03:51 | 04:06 | | 04:21 | 04:36 | 04:51 | 05:06 | 05:21 | 05:36 | 05:51 | 06:06 | 06:21 | 06:36 | 06:48 | 06:58 | 07:08 | 07:18 | 07:28 |
| BSKR o | 01:22 | 01:37 | | 01:52 | 02:07 | | 02:22 | 02:37 | | 02:52 | 03:07 | | 03:22 | 03:37 | | 03:52 | 04:07 | | 04:22 | 04:37 | 04:52 | 05:07 | 05:22 | 05:37 | 05:52 | 06:07 | 06:22 | 06:37 | 06:50 | 07:00 | 07:10 | 07:20 | 07:30 |
| nach | | HAL | | | HAL | | | HAL | | | HAL | | | | | | | | | | | | | | | | | | | | | | |

| | | | | |
|---|---|---|---|---|
| BADL | 3/4 | 3 | 45 | Schönefeld ✈ |
| | | | 46 | Königs Wusterhausen |
| | | | 8 | Zeuthen |
| | | | 85 | Grünau |
| | | | 9 | Schönefeld ✈ |
| | | 4 | 45 | Südkreuz |
| | | | 46 | Westend |
| | | | 8 | Birkenwerder |
| | | | 85 | Pankow |
| | | | 9 | Spandau |
| BAF | 41 | 41 | 7 | **Ankunft** |
| | | | 7 | **Potsdam Hbf** |
| | 42/44 | 42 | 7 | **Ankunft** |
| | | | 7 | **Potsdam Hbf** |
| | | 44 | | Regionalverkehr |
| BAGL | 1/2 | 1 | 45 | Schönefeld ✈ |
| | | | 9 | Schönefeld ✈ |
| | | 2 | 45 | Südkreuz |
| | | | 9 | Spandau |
| BAHU | A | 1 | | kein Zugverkehr |
| | | 2 | 1 | Wannsee |
| | | | 2 | Blankenfelde |
| | | | 25 | Teltow Stadt |
| | | | 26 | Teltow Stadt |
| | B | 3 | 1 | Oranienburg |
| | | 4 | 2 | Bernau |
| | | | 25 | Hennigsdorf |
| | | | 26 | Waidmannslust |
| BALX | B | 3 | 3 | Erkner |
| | | | 5 | Strausberg Nord |
| | | | 7 | Ahrensfelde |
| | | | 9 | Schönefeld ✈ |
| | | 4 | 3 | Spandau |
| | | | 5 | Westkreuz |
| | | | 7 | Potsdam Hbf |
| | | | 9 | Spandau |
| BARF | 1 | 1 | 25 | Teltow Stadt |
| | | | 25 | Hennigsdorf |
| BATS | 1/2 | 1 | 2 | Blankenfelde |
| | | 2 | 2 | Bernau |
| BBAB | 1/2 | 1 | 7 | Potsdam Hbf |
| | | 2 | 7 | Ahrensfelde |
| BBCH | 1/2 | 1 | 2 | Blankenfelde |
| | | 2 | 2 | Bernau |
| BBDF | 1 | 1 | 5 | Westkreuz |
| | 2 | 2 | 5 | Strausberg Nord |
| BBER | 1/2 | 2 | 2 | **Ankunft** |
| | | | 2 | **Blankenfelde** |
| BBEU | 1/2 | 1 | 41 | Ring ↻ |
| | | | 46 | Gesundbrunnen |
| | | 2 | 42 | Ring ↺ |
| | | | 46 | Königs Wusterhausen |
| BBEV | 3/4 | 3 | 3 | Erkner |
| | | | 5 | Strausberg Nord |
| | | | 7 | Ahrensfelde |
| | | | 9 | Schönefeld ✈ |
| | | 4 | 3 | Spandau |
| | | | 5 | Westkreuz |
| | | | 7 | Potsdam Hbf |
| | | | 9 | Spandau |
| BBFD | 3 | 3 | 2 | **Ankunft** |
| | | | 2 | **Bernau** |
| BBFE | 1/2 | 1 | 8 | Zeuthen |
| | | 2 | 8 | Birkenwerder |
| BBGT | 1/2 | 1 | 1 | Wannsee |
| | | 2 | 1 | Oranienburg |
| BBIS | 1/2 | 1 | 5 | Westkreuz |
| | | 2 | 5 | Strausberg Nord |
| BBIW | 4/6 | 4 | 1 | Oranienburg |
| | | | 8 | **Ankunft** |
| | | 6 | 1 | Wannsee |
| | | | 8 | **Zeuthen** |
| BBLB | 1/4 | 1 | 2 | Blankenfelde |
| | | | 8 | Zeuthen |
| | | | 8 | **Zeuthen** |
| | | 4 | 2 | Bernau |
| | | | 8 | Birkenwerder |
| | | | 8 | **Ankunft** |
| BBMW | A | 3 | 8 | Zeuthen |
| | | | 85 | Grünau |
| | | | 9 | Schönefeld ✈ |
| | | 5 | 45 | Schönefeld ✈ |
| | | | 46 | Königs Wusterhausen |
| | | | 47 | Spindlersfeld |
| | B | 4 | 45 | Südkreuz |
| | | | 46 | Westend |
| | | | 47 | Hermannstraße |
| | | | 8 | Birkenwerder |
| | | | 85 | Pankow |
| | | | 9 | Spandau |
| BBOR | 1/2 | 1 | 1 | Oranienburg |
| | | 2 | 1 | Wannsee |

| | | | | |
|---|---|---|---|---|
| BBOS | A | 1 | 1 | Wannsee |
| | | | 25 | Teltow Stadt |
| | | | 26 | Teltow Stadt |
| | | 2 | 2 | Blankenfelde |
| | | | 8 | Zeuthen |
| | | | 85 | Grünau |
| | B | 3 | 2 | Bernau |
| | | | 8 | Birkenwerder |
| | | | 85 | Pankow |
| | | 4 | 1 | Oranienburg |
| | | | 25 | Hennigsdorf |
| | | | 26 | Waidmannslust |
| BBRF | 1 | 1 | 2 | Bernau |
| | | | 2 | Blankenfelde |
| BBU | 1/2 | 1 | 2 | Blankenfelde |
| | | | 2 | **Lichtenrade** |
| | | 2 | 2 | **Ankunft** |
| | | | 2 | Bernau |
| BBUP | 1/2 | 1 | 41 | Ring ↻ |
| | | | 46 | Westend |
| | | 2 | 42 | Ring ↺ |
| | | | 46 | Königs Wusterhausen |
| BCHS | C | 5 | 3 | Erkner |
| | | 6 | 5 | Strausberg Nord |
| | | | 7 | Ahrensfelde |
| | | | 9 | Schönefeld ✈ |
| | D | 7 | 7 | Potsdam Hbf |
| | | 8 | 3 | Spandau |
| | | | 5 | Westkreuz |
| | | | 9 | Spandau |
| BE | 31/32 | 31 | 3 | **Ankunft** |
| | | | 3 | **Westkreuz** |
| | | 32 | 3 | **Ankunft** |
| | | | 3 | **Westkreuz** |
| BEBD | 2 | 2 | 25 | Teltow Stadt |
| | | | 25 | Hennigsdorf |
| BEIW | 3/4 | 3 | 46 | Königs Wusterhausen |
| | | | 8 | Zeuthen |
| | | 4 | 46 | Westend |
| | | | 8 | Birkenwerder |
| BFA | 1/2 | 1 | 41 | Ring ↻ |
| | | | 8 | Zeuthen |
| | | | 85 | Grünau |
| | | 2 | 42 | Ring ↺ |
| | | | 8 | Birkenwerder |
| | | | 85 | Pankow |
| BFB | 1/2 | 1 | 1 | Wannsee |
| | | 2 | 1 | Oranienburg |
| BFD | 15/16 | 15 | 5 | Strausberg Nord |
| | | 16 | 5 | Westkreuz |
| BFFO | 1/2 | 1 | 5 | Strausberg Nord |
| | | | 7 | Ahrensfelde |
| | | | 75 | Wartenberg |
| | | 2 | 5 | Westkreuz |
| | | | 7 | Potsdam Hbf |
| | | | 75 | Ostbahnhof |
| BFLH ✈ | A | 11 | 45 | **Ankunft** |
| | | | 45 | **Südkreuz** |
| | | 13 | 9 | **Ankunft** |
| | | | 9 | **Spandau** |
| BFOH | 1/2 | 1 | 1 | **Ankunft** |
| | | | 1 | Oranienburg |
| | | 2 | 1 | Wannsee |
| | | | 1 | **Wannsee** |
| BFRH | 1/2 | 1 | 3 | Spandau |
| | | | 3 | **Spandau** |
| | | 2 | 3 | **Ankunft** |
| | | | 3 | Erkner |
| BFRU | 1/2 | 1 | 1 | Wannsee |
| | | 2 | 1 | Oranienburg |
| BFST | C | 5 | 3 | Erkner |
| | | | 5 | Strausberg Nord |
| | | | 7 | Ahrensfelde |
| | | | 9 | Schönefeld ✈ |
| | | 6 | 3 | Spandau |
| | | | 5 | Westkreuz |
| | | | 7 | Potsdam Hbf |
| | | | 9 | Spandau |
| BFSTT | D | 11 | 1 | Wannsee |
| | | | 2 | Blankenfelde |
| | | | 25 | Teltow Stadt |
| | | | 26 | Teltow Stadt |
| | | 12 | 1 | Oranienburg |
| | | | 2 | Bernau |
| | | | 25 | Hennigsdorf |
| | | | 26 | Waidmannslust |

| | | | | |
|---|---|---|---|---|
| BGAS | A | 1 | 46 | Königs Wusterhausen |
| | | | 8 | Zeuthen |
| | | 2 | 8 | **Ankunft** |
| | | | 85 | **Ankunft** |
| | B | 3 | 8 | **Birkenwerder** |
| | | | 85 | **Pankow** |
| | | 4 | 46 | Westend |
| | | | 8 | Birkenwerder |
| BGB | A | 1 | 1 | Wannsee |
| | | | 2 | Blankenfelde |
| | | | 25 | Teltow Stadt |
| | | | 26 | Teltow Stadt |
| | | 2 | 42 | Ring ↺ |
| | | | 46 | **Königs Wusterhausen** |
| | B | 3 | 41 | Ring ↻ |
| | | | 46 | **Ankunft** |
| | | 4 | 1 | Oranienburg |
| | | | 2 | Bernau |
| | | | 25 | Hennigsdorf |
| | | | 26 | Waidmannslust |
| BGBA | 1/2 | 1 | 45 | Schönefeld ✈ |
| | | | 9 | Schönefeld ✈ |
| | | 2 | 45 | Südkreuz |
| | | | 9 | Spandau |
| BGGS | 1/2 | 1 | 1 | Wannsee |
| | | 2 | 1 | Oranienburg |
| BGRI | 1/2 | 1 | 7 | Potsdam Hbf |
| | | 2 | 7 | Ahrensfelde |
| BGSE | 51/52 | 51 | 75 | Wartenberg |
| | | 52 | 75 | Ostbahnhof |
| BGSS | 1/2 | 1 | 41 | Ring ↻ |
| | | | 8 | Zeuthen |
| | | | 85 | Grünau |
| | | 2 | 42 | Ring ↺ |
| | | | 8 | Birkenwerder |
| | | | 85 | Pankow |
| BGWD | A | 1 | 7 | Potsdam Hbf |
| | | 2 | 3 | **Ankunft** |
| | | | 5 | **Ankunft** |
| | | | 7 | **Ankunft** |
| | B | 3 | 3 | **Erkner** |
| | | | 5 | **Mahlsdorf** |
| | | | 7 | **Ahrensfelde** |
| | | 4 | 7 | Ahrensfelde |
| BHAL | 1/2 | 1 | 41 | Ring ↻ |
| | | | 46 | Westend |
| | | 2 | 42 | Ring ↺ |
| | | | 46 | Königs Wusterhausen |
| BHBF | 15/16 | 15 | 3 | Erkner |
| | | | 5 | Strausberg Nord |
| | | | 7 | Ahrensfelde |
| | | | 9 | Schönefeld ✈ |
| | | 16 | 3 | Spandau |
| | | | 5 | Westkreuz |
| | | | 7 | Potsdam Hbf |
| | | | 9 | Spandau |
| BHD | A | 1 | 25 | **Ankunft** |
| | | | 25 | **Teltow Stadt** |
| | | | | Regionalverkehr |
| | | 5 | 25 | **Ankunft** |
| | | | 25 | **Teltow Stadt** |
| | | | | Regionalverkehr |
| BHED | 1/2 | 1 | 1 | Oranienburg |
| | | 2 | 1 | Wannsee |
| BHEI | 1/2 | 1 | 41 | Ring ↻ |
| | | | 46 | Westend |
| | | 2 | 42 | Ring ↺ |
| | | | 46 | Königs Wusterhausen |
| BHER | 1/2 | 1 | 41 | Ring ↻ |
| | | | 45 | Südkreuz |
| | | | 46 | Westend |
| | | | 47 | **Ankunft** |
| | | 2 | 42 | Ring ↺ |
| | | | 45 | Schönefeld ✈ |
| | | | 46 | Königs Wusterhausen |
| | | | 47 | **Spindlersfeld** |
| BHGM | 1 | 1 | 5 | Strausberg Nord |
| | | | 5 | Westkreuz |
| BHH | 1/2 | 1 | 75 | Wartenberg |
| | | 2 | 75 | Ostbahnhof |
| BHI | 1/2 | 1 | 3 | Westkreuz |
| | | 2 | 3 | Erkner |
| BHKM | 3/4 | 3 | 3 | Erkner |
| | | | 5 | Strausberg Nord |
| | | | 7 | Ahrensfelde |
| | | | 9 | Schönefeld ✈ |
| | | 4 | 3 | Spandau |
| | | | 5 | Westkreuz |
| | | | 7 | Potsdam Hbf |
| | | | 9 | Spandau |

| | | | | |
|---|---|---|---|---|
| BHLS | 1/2 | 1 | 25 | Hennigsdorf |
| | | 2 | 25 | Teltow Stadt |
| BHN | 3/4 | 3 | 1 | Oranienburg |
| | | | 8 | Birkenwerder |
| | | 4 | 1 | Wannsee |
| | | | 8 | Zeuthen |
| BHO | 1/2 | 1 | 41 | Ring ↻ |
| | | | 46 | Westend |
| | | 2 | 42 | Ring ↺ |
| | | | 46 | Königs Wusterhausen |
| BHPG | 4/5 | 4 | 5 | **Ankunft** |
| | | | 5 | **Westkreuz** |
| | | | 5 | Strausberg Nord |
| | | | 5 | Westkreuz |
| | | 5 | | kein Zugverkehr |
| BHST | 1/2 | 1 | 3 | Erkner |
| | | | 9 | Schönefeld ✈ |
| | | 2 | 3 | Spandau |
| | | | 9 | Spandau |
| BHUM | 1/2 | 1 | 1 | Wannsee |
| | | | 2 | Blankenfelde |
| | | | 25 | Teltow Stadt |
| | | | 26 | Teltow Stadt |
| | | 2 | 1 | Oranienburg |
| | | | 2 | Bernau |
| | | | 25 | Hennigsdorf |
| | | | 26 | Waidmannslust |
| BIP | 1/2 | 1 | 41 | Ring ↻ |
| | | | 46 | Westend |
| | | 2 | 42 | Ring ↺ |
| | | | 46 | Königs Wusterhausen |
| BJB | 3/4 | 3 | 3 | Erkner |
| | | | 5 | Strausberg Nord |
| | | | 7 | Ahrensfelde |
| | | | 9 | Schönefeld ✈ |
| | | 4 | 3 | Spandau |
| | | | 5 | Westkreuz |
| | | | 7 | Potsdam Hbf |
| | | | 9 | Spandau |
| BJLB | 1 | 1 | 1 | Wannsee |
| | | 2 | 1 | Oranienburg |
| BJUN | B | 5 | 41 | Ring ↻ |
| | | | 46 | Gesundbrunnen |
| | | 6 | 42 | Ring ↺ |
| | | | 46 | Königs Wusterhausen |
| BKAD | 1/2 | 1 | 5 | Westkreuz |
| | | 2 | 5 | Strausberg Nord |
| BKBO | 2 | 2 | 25 | Teltow Stadt |
| | | | 25 | Hennigsdorf |
| BKHD | 1/2 | 1 | 45 | Südkreuz |
| | | | 46 | Westend |
| | | | 47 | Hermannstraße |
| | | 2 | 45 | Schönefeld ✈ |
| | | | 46 | Königs Wusterhausen |
| | | | 47 | Spindlersfeld |
| BKLH | 11/12 | 11 | 3 | Spandau |
| | | 12 | 3 | Erkner |
| BKPK | 1/2 | 1 | 3 | Spandau |
| | | 2 | 3 | Erkner |
| BKRW | 3/4 | 3 | 2 | Bernau |
| | | | | Regionalverkehr |
| | | 4 | 2 | Blankenfelde |
| BKW | B | 2 | 46 | **Ankunft** |
| | | | 46 | **Westend** |
| | | 3 | | Regionalverkehr |
| BLAK | 2 | 2 | 25 | Teltow Stadt |
| | | | 26 | Teltow Stadt |
| | | | 25 | Hennigsdorf |
| | | | 26 | Waidmannslust |
| BLEN | 1/2 | 1 | 1 | Oranienburg |
| | | 2 | 1 | Wannsee |
| BLI | 1/2 | 1 | 5 | Strausberg Nord |
| | | | 5 | **Mahlsdorf** |
| | | | 7 | Ahrensfelde |
| | | | 75 | Wartenberg |
| | | | 75 | **Wartenberg** |
| | | 2 | 5 | Westkreuz |
| | | | 5 | **Ankunft** |
| | | | 7 | Potsdam Hbf |
| | | | 75 | Ostbahnhof |
| | | | 75 | **Ankunft** |
| BLIO | 1/2 | 1 | 25 | Teltow Stadt |
| | | | 26 | Teltow Stadt |
| | | 2 | 25 | Hennigsdorf |
| | | | 26 | Waidmannslust |
| BLIS | 1/2 | 1 | 25 | Teltow Stadt |
| | | | 26 | Teltow Stadt |
| | | 2 | 25 | Hennigsdorf |
| | | | 26 | Waidmannslust |

| | | | | |
|---|---|---|---|---|
| BLRD | 1/2 | 1 | 2 | Blankenfelde |
| | | | 2 | Bernau |
| | | 2 | 2 | **Ankunft** |
| | | | 2 | **Buch** |
| BLST | 1/2 | 1 | 41 | Ring ↻ |
| | | | 8 | Zeuthen |
| | | | 85 | Grünau |
| | | 2 | 42 | Ring ↺ |
| | | | 8 | Birkenwerder |
| | | | 85 | Pankow |
| BLWE | 1/2 | 1 | 1 | Wannsee |
| | | 2 | 1 | Oranienburg |
| BMAH | 2/3 | 2 | 2 | Bernau |
| | | 3 | 2 | Blankenfelde |
| BMAZ | 1/2 | 1 | 7 | Ahrensfelde |
| | | 2 | 7 | Potsdam Hbf |
| BMDF | 1/2 | 1 | 5 | **Ankunft** |
| | | | 5 | **Westkreuz** |
| | | | 5 | **Lichtenberg** |
| | | 2 | 5 | Westkreuz |
| | 3/4 | 3 | 5 | Strausberg Nord |
| | | 4 | 5 | **Ankunft** |
| | | | 5 | **Strausberg Nord** |
| BMEA | 1/2 | 1 | 7 | Ahrensfelde |
| | | 2 | 7 | Potsdam Hbf |
| BMEX | 1/2 | 1 | 1 | Wannsee |
| | | 2 | 1 | Oranienburg |
| BMF | 1/2 | 1 | 2 | Blankenfelde |
| | | 2 | 2 | Bernau |
| BMM | 6 | 6 | 8 | Birkenwerder |
| | | | 8 | Zeuthen |
| BMN | 1/2 | 1 | 41 | Ring ↻ |
| | | | 46 | Westend |
| | | 2 | 42 | Ring ↺ |
| | | | 46 | Königs Wusterhausen |
| BMS | 1/2 | 1 | 3 | Erkner |
| | | | 9 | Schönefeld ✈ |
| | | 2 | 3 | Spandau |
| | | | 9 | Spandau |
| BNB | A | 1 | 1 | Wannsee |
| | | | 2 | Blankenfelde |
| | | | 25 | Teltow Stadt |
| | | | 26 | Teltow Stadt |
| | | 2 | 25 | **Teltow Stadt** |
| | B | 3 | 25 | **Ankunft** |
| | | 4 | 1 | Oranienburg |
| | | | 2 | Bernau |
| | | | 25 | Hennigsdorf |
| | | | 26 | Waidmannslust |
| BNIS | 3/4 | 3 | 7 | Potsdam Hbf |
| | | 4 | 7 | Ahrensfelde |
| BNIW | 1/2 | 1 | 1 | Wannsee |
| | | 2 | 1 | Oranienburg |
| BNG | 1 | 1 | 5 | Strausberg Nord |
| | | | 5 | Westkreuz |
| BNK | 1/2 | 1 | 41 | Ring ↻ |
| | | | 45 | Südkreuz |
| | | | 46 | Westend |
| | | | 47 | Hermannstraße |
| | | 2 | 42 | Ring ↺ |
| | | | 45 | Schönefeld ✈ |
| | | | 46 | Königs Wusterhausen |
| | | | 47 | Spindlersfeld |
| BNPL | 1/2 | 1 | 5 | Strausberg Nord |
| | | | 7 | Ahrensfelde |
| | | | 75 | Wartenberg |
| | | 2 | 5 | Westkreuz |
| | | | 7 | Potsdam Hbf |
| | | | 75 | Ostbahnhof |
| BOK | F | 11 | 41 | Ring ↻ |
| | | | 8 | Zeuthen |
| | | | 85 | Grünau |
| | | 12 | 42 | Ring ↺ |
| | | | 8 | Birkenwerder |
| | | | 85 | Pankow |
| BOKS | D | 5 | 3 | Ostbahnhof |
| | | | 5 | Westkreuz |
| | | | 75 | Ostbahnhof |
| | | 6 | 3 | Spandau |
| | | | 5 | Westkreuz |
| | | | 7 | Potsdam Hbf |
| | | | 75 | Ostbahnhof |
| | E | 3 | 3 | Erkner |
| | | | 5 | Strausberg Nord |
| | | | 7 | Ahrensfelde |
| | | 4 | 75 | Wartenberg |

| | | | | |
|---|---|---|---|---|
| BOLS | A | 1 | 3 | Erkner |
| | | | 9 | Schönefeld ✈ |
| | | 2 | 3 | Spandau |
| | | | 9 | Spandau |
| | B-E | | | bei Veranstaltungen |
| BORB | A | 30 | 1 | **Ankunft** |
| | | | 1 | **Wannsee** |
| | | 32 | | kein Zugverkehr |
| BORS | 1/2 | 1 | 1 | Wannsee |
| | | | 2 | Blankenfelde |
| | | | 25 | Teltow Stadt |
| | | | 26 | Teltow Stadt |
| | | 2 | 1 | Oranienburg |
| | | | 2 | Bernau |
| | | | 25 | Hennigsdorf |
| | | | 26 | Waidmannslust |
| BOSB | D | 8 | 3 | Erkner |
| | | | 5 | Strausberg Nord |
| | | | 7 | Ahrensfelde |
| | | | 9 | Schönefeld ✈ |
| | | 9 | 3 | **Erkner** |
| | | | 75 | **Ankunft** |
| | | | 75 | **Wartenberg** |
| | E | 10 | 3 | **Ankunft** |
| | | 11 | 3 | Spandau |
| | | | 5 | Westkreuz |
| | | | 7 | Potsdam Hbf |
| | | | 9 | Spandau |
| BOSP | 1 | 1 | 47 | Spindlersfeld |
| | | | 47 | Hermannstraße |
| BOSS | 1/2 | 1 | 25 | Teltow Stadt |
| | | | 26 | Teltow Stadt |
| | | 2 | 25 | Hennigsdorf |
| | | | 26 | Waidmannslust |
| BPDH | C | 6 | 7 | **Ankunft** |
| | | | 7 | **Ahrensfelde** |
| | | 7 | 7 | **Ankunft** |
| | | | 7 | **Ahrensfelde** |
| BPEN | 1 | 1 | 5 | Strausberg Nord |
| | | | 5 | Westkreuz |
| BPHD | 1/2 | 1 | 2 | Blankenfelde |
| | | | 8 | Zeuthen |
| | | 2 | 2 | Bernau |
| | | | 8 | Birkenwerder |
| BPIC | 1/2 | 1 | 3 | Erkner |
| | | | 9 | Schönefeld ✈ |
| | | 2 | 3 | Spandau |
| | | | 9 | Spandau |
| BPKW | 1/2 | 1 | 2 | Bernau |
| | | | 8 | Birkenwerder |
| | | | 85 | **Ankunft** |
| | | 2 | 2 | Blankenfelde |
| | | | 8 | Zeuthen |
| | | | 85 | **Grünau** |
| BPLA | 1/2 | 1 | 41 | Ring ↻ |
| | | | 8 | Zeuthen |
| | | | 85 | Grünau |
| | | 2 | 42 | Ring ↺ |
| | | | 8 | Birkenwerder |
| | | | 85 | Pankow |
| BPOE | 1/2 | 1 | 7 | Ahrensfelde |
| | | 2 | 7 | Potsdam Hbf |
| BPOP | A | 11 | 1 | Wannsee |
| | | | 2 | Blankenfelde |
| | | | 25 | Teltow Stadt |
| | | | 26 | Teltow Stadt |
| | | 12 | 1 | **Zehlendorf** |
| | | | 26 | **Teltow Stadt** |
| | B | 14 | 1 | Oranienburg |
| | | | 1 | **Ankunft** |
| | | | 2 | Bernau |
| | | | 25 | Hennigsdorf |
| | | | 26 | Waidmannslust |
| | | | 26 | **Ankunft** |
| BPRS | A | 1 | 2 | Blankenfelde |
| | | 3 | 25 | Teltow Stadt |
| | | | 26 | Teltow Stadt |
| | B | 2 | 2 | Bernau |
| | | 4 | 25 | Hennigsdorf |
| | | | 26 | Waidmannslust |
| BPWA | 3/4 | 3 | 8 | Zeuthen |
| | | | 85 | Grünau |
| | | | 9 | Schönefeld ✈ |
| | | 4 | 8 | Birkenwerder |
| | | | 85 | Pankow |
| | | | 9 | Spandau |

| | | | | |
|---|---|---|---|---|
| BRB | 1/2 | 1 | 3 | Spandau |
| | | 2 | 3 | Erkner |
| BRD | 1/2 | 1 | 3 | Spandau |
| | | 2 | 3 | Erkner |
| BRGT | 1 | 1 | 2 | Blankenfelde |
| | | | 2 | Bernau |
| BRH | 1/2 | 1 | 3 | Spandau |
| | | 2 | 3 | Erkner |
| BRST | 1/2 | 1 | 1 | Wannsee |
| | | 2 | 1 | Oranienburg |
| BRW | 1/2 | 1 | 7 | Ahrensfelde |
| | | 2 | 7 | Potsdam Hbf |
| BSAL | 1/2 | 1 | 41 | Ring ⟳ |
| | | | 8 | Zeuthen |
| | | | 85 | Grünau |
| | | 2 | 42 | Ring ⟳ |
| | | | 8 | Birkenwerder |
| | | | 85 | Pankow |
| BSAP | 3/4 | 3 | 3 | Erkner |
| | | | 5 | Strausberg Nord |
| | | | 7 | Ahrensfelde |
| | | | 9 | Schönefeld ✈ |
| | | 4 | 3 | Spandau |
| | | | 5 | Westkreuz |
| | | | 7 | Potsdam Hbf |
| | | | 9 | Spandau |
| BSC | 1/2 | 1 | 2 | Blankenfelde |
| | | 2 | 2 | Bernau |
| BSCF | 3/4 | 3 | 45 | Schönefeld ✈ |
| | | | 46 | Königs Wusterhausen |
| | | | 8 | Zeuthen |
| | | | 85 | Grünau |
| | | | 9 | Schönefeld ✈ |
| | | 4 | 45 | Südkreuz |
| | | | 46 | Westend |
| | | | 8 | Birkenwerder |
| | | | 85 | Pankow |
| | | | 9 | Spandau |
| BSLS | 1/2 | 1 | 1 | Wannsee |
| | | 2 | 1 | Oranienburg |
| BSDE | 1/2 | 1 | 25 | Teltow Stadt |
| | | | 26 | Teltow Stadt |
| | | 2 | 25 | Hennigsdorf |
| | | | 26 | Waidmannslust |
| BSDG | 1/2 | 1 | 1 | Wannsee |
| | | 2 | 1 | Oranienburg |
| BSGR | 11/12 | 11 | 41 | Ring ⟳ |
| | | | 46 | Westend |
| | | 12 | 42 | Ring ⟳ |
| | | | 46 | Königs Wusterhausen |
| BSGV | 1/2 | 1 | 1 | Wannsee |
| | | 2 | 1 | Oranienburg |
| BSKR | 11/12 | 11 | 41 | Ring ⟳ |
| | | | 45 | **Ankunft** |
| | | | 46 | Westend |
| | | 12 | 42 | Ring ⟳ |
| | | | 45 | **Schönefeld ✈** |
| | | | 46 | Königs Wusterhausen |
| BSKV | 1/2 | 1 | 2 | Blankenfelde |
| | | | 25 | Teltow Stadt |
| | | | 26 | Teltow Stadt |
| | | 2 | 2 | Bernau |
| | | | 25 | Hennigsdorf |
| | | | 26 | Waidmannslust |
| BSNF | 6/8 | 6 | 8 | Birkenwerder |
| | | 8 | 8 | Zeuthen |
| BSNH | 3/4 | 3 | 1 | Oranienburg |
| | | | 25 | Hennigsdorf |
| | | | 26 | Waidmannslust |
| | | 4 | 1 | Wannsee |
| | | | 25 | Teltow Stadt |
| | | | 26 | Teltow Stadt |
| BSO | 1/2 | 1 | 41 | Ring ⟳ |
| | | 2 | 42 | Ring ⟳ |
| BSPA | A | 1 | 3 | **Ankunft** |
| | | | 3 | **Erkner** |
| | | 2 | 9 | **Ankunft** |
| | | | 9 | **Schönefeld ✈** |
| BSPF | 1 | 1 | 47 | **Ankunft** |
| | | | 47 | **Hermannstraße** |
| BSPH | 20/21 | 20 | 7 | Potsdam Hbf |
| | | | 75 | Ostbahnhof |
| | | 21 | 7 | Ahrensfelde |
| | | | 75 | Wartenberg |
| BSRW | 1/2 | 1 | 3 | Spandau |
| | | | 9 | Spandau |
| | | 2 | 3 | Erkner |
| | | | 9 | Schönefeld ✈ |

| | | | | |
|---|---|---|---|---|
| BSTN | 1 | 1 | 5 | **Ankunft** |
| | | | 5 | **Westkreuz** |
| BSTO | 1/2 | 1 | 41 | Ring ⟳ |
| | | | 8 | Zeuthen |
| | | | 85 | Grünau |
| | | 2 | 42 | Ring ⟳ |
| | | | 8 | Birkenwerder |
| | | | 85 | Pankow |
| BSTR | 1 | 1 | 5 | Strausberg Nord |
| | | | 5 | Westkreuz |
| BSTV | 8/9 | 8 | 5 | Strausberg Nord |
| | | | 5 | Westkreuz |
| | | 9 | 5 | **Ankunft** |
| | | | 5 | **Westkreuz** |
| BSW | 3/4 | 3 | 45 | Schönefeld ✈ |
| | | | 46 | Königs Wusterhausen |
| | | | 47 | Spindlersfeld |
| | | | 47 | **Ankunft** |
| | | | 47 | **Spindlersfeld** |
| | | | 8 | Zeuthen |
| | | | 85 | Grünau |
| | | | 9 | Schönefeld ✈ |
| | | 4 | | **kein Zugverkehr** |
| | 5/6 | 5 | 85 | **kein Zugverkehr** |
| | | 6 | 45 | Südkreuz |
| | | | 46 | Westend |
| | | | 47 | Hermannstraße |
| | | | 8 | Birkenwerder |
| | | | 85 | Pankow |
| | | | 9 | Spandau |
| BSZF | 1 | 1 | 25 | Teltow Stadt |
| | | | 25 | Hennigsdorf |
| BTG | 1/6 | 1 | 25 | Hennigsdorf |
| | | 6 | 25 | Teltow Stadt |
| BTGN | 3/4 | 3 | 3 | Erkner |
| | | | 5 | Strausberg Nord |
| | | | 7 | Ahrensfelde |
| | | | 9 | Schönefeld ✈ |
| | | 4 | 3 | Spandau |
| | | | 5 | Westkreuz |
| | | | 7 | Potsdam Hbf |
| | | | 9 | Spandau |
| BTHF | 1/2 | 1 | 41 | Ring ⟳ |
| | | | 45 | Südkreuz |
| | | | 46 | Westend |
| | | 2 | 42 | Ring ⟳ |
| | | | 45 | Schönefeld ✈ |
| | | | 46 | Königs Wusterhausen |
| BTLS | 1/2 | 1 | 26 | **Ankunft** |
| | | | 26 | **Waidmannslust** |
| | | 2 | 25 | **Ankunft** |
| | | | 25 | **Hennigsdorf** |
| BTOR | 1/2 | 1 | 1 | Wannsee |
| | | | 2 | Blankenfelde |
| | | | 25 | Teltow Stadt |
| | | | 26 | Teltow Stadt |
| | | 2 | 1 | Oranienburg |
| | | | 2 | Bernau |
| | | | 25 | Hennigsdorf |
| | | | 26 | Waidmannslust |
| BTP | A | 1 | 41 | Ring ⟳ |
| | | | 85 | Grünau |
| | | 3 | 8 | Zeuthen |
| | | | 9 | Schönefeld ✈ |
| | B | 2 | 42 | Ring ⟳ |
| | | | 8 | Birkenwerder |
| | | 4 | 85 | Pankow |
| | | | 9 | Spandau |
| BWAB | 11/12 | 11 | 75 | **Ankunft** |
| | | | 75 | **Ostbahnhof** |
| | | 12 | 75 | **Ankunft** |
| | | | 75 | **Ostbahnhof** |
| BWAI | 1/2 | 1 | 1 | Oranienburg |
| | | | 26 | **Ankunft** |
| | | 2 | 1 | Wannsee |
| | | | 26 | **Teltow Stadt** |
| BWED | 1/2 | 1 | 41 | Ring ⟳ |
| | | | 46 | Gesundbrunnen |
| | | 2 | 42 | Ring ⟳ |
| | | | 46 | Königs Wusterhausen |

| | | | | |
|---|---|---|---|---|
| BWES | 1/2 | 1 | 41 | Ring ⟳ |
| | | | 46 | Gesundbrunnen |
| | | | 46 | **Ankunft** |
| | | 2 | 42 | Ring ⟳ |
| | | | 46 | Königs Wusterhausen |
| | | | 46 | **Königs Wusterhausen** |
| BWH | | 1 | 41 | Ring ⟳ |
| | | | 46 | Gesundbrunnen |
| | | 2 | 42 | Ring ⟳ |
| | | | 46 | Königs Wusterhausen |
| BWHH | 1/2 | 1 | 3 | Spandau |
| | | 2 | 3 | Erkner |
| BWI | 3/4 | 3 | 46 | Königs Wusterhausen |
| | | 4 | 46 | Westend |
| BWIG | 1/2 | 1 | 3 | Spandau |
| | | 2 | 3 | Erkner |
| BWIN | | 1 | 1 | Oranienburg |
| | | | 26 | Waidmannslust |
| | | 2 | 1 | Wannsee |
| | | | 26 | Teltow Stadt |
| BWKRR | 11/12 | 11 | 41 | Ring ⟳ |
| | | | 46 | Westend |
| | | 12 | 42 | Ring ⟳ |
| | | | 46 | Königs Wusterhausen |
| BWKS | A | 1 | 3 | Spandau |
| | | | 7 | Potsdam Hbf |
| | | | 9 | Spandau |
| | | 2 | 5 | **Ankunft** |
| | B | 3 | 5 | **Strausberg Nord** |
| | | 4 | 3 | Erkner |
| | | | 7 | Ahrensfelde |
| | | | 9 | Schönefeld ✈ |
| BWM | 1/2 | 1 | 1 | Oranienburg |
| | | | 26 | Waidmannslust |
| | | 2 | 1 | Wannsee |
| | | | 26 | Teltow Stadt |
| BWOK | 3/4 | 3 | 1 | Oranienburg |
| | | | 25 | Hennigsdorf |
| | | | 26 | Waidmannslust |
| | | 4 | 1 | Wannsee |
| | | | 25 | Teltow Stadt |
| | | | 26 | Teltow Stadt |
| BWRS | A | 1 | 3 | Erkner |
| | | | 5 | Strausberg Nord |
| | | | 7 | Ahrensfelde |
| | | | 9 | Schönefeld ✈ |
| | | 2 | 3 | Erkner |
| | | | 75 | Wartenberg |
| | | | 75 | **Wartenberg** |
| | B | 3 | 3 | Ostbahnhof |
| | | | 75 | Ostbahnhof |
| | | | 75 | **Ankunft** |
| | | 4 | 3 | Spandau |
| | | | 5 | Westkreuz |
| | | | 7 | Potsdam Hbf |
| | | | 75 | Ostbahnhof |
| | | | 9 | Spandau |
| BWSS | A | 1 | 7 | Potsdam Hbf |
| | | 2 | 1 | **Ankunft** |
| | B | 3 | 1 | **Oranienburg** |
| | | 4 | 7 | Ahrensfelde |
| BWT | 11/1 | 11 | 5 | Westkreuz |
| | | 1 | U5 | Alexanderplatz |
| | 12/2 | 2 | U5 | Hönow |
| | | 12 | 5 | Strausberg Nord |
| BYOR | 1/2 | 1 | 2 | Blankenfelde |
| | | | 25 | Teltow Stadt |
| | | | 26 | Teltow Stadt |
| | | 2 | 2 | Bernau |
| | | | 25 | Hennigsdorf |
| | | | 26 | Waidmannslust |
| BZD | 1/2 | 1 | 1 | Wannsee |
| | | | 1 | **Ankunft** |
| | | 2 | 1 | Oranienburg |
| | | | 1 | **Potsdamer Platz** |
| BZEP | 4/6 | 4 | 2 | Bernau |
| | | 6 | 2 | Blankenfelde |
| BZOS | 5/6 | 5 | 3 | Erkner |
| | | | 5 | Strausberg Nord |
| | | | 7 | Ahrensfelde |
| | | | 9 | Schönefeld ✈ |
| | | 6 | 3 | Spandau |
| | | | 5 | Westkreuz |
| | | | 7 | Potsdam Hbf |
| | | | 9 | Spandau |
| BZTH | 3/4 | 3 | 46 | Königs Wusterhausen |
| | | | 8 | **Ankunft** |
| | | | 8 | **Birkenwerder** |
| | | 4 | 46 | Westend |

| Nachtverkehr | | | | |
|---|---|---|---|---|
| BADL | 3/4 | 3 | 46 | Königs Wusterhausen |
| | | | 8 | Grünau |
| | | | 9 | Schönefeld ✈ |
| | | 4 | 46 | Südkreuz |
| | | | 8 | Pankow |
| | | | 9 | Spandau |
| BAF | 41/42 | 41 | 7 | **Ankunft** |
| | | | 7 | **Potsdam Hbf** |
| | | 42 | | **kein Zugverkehr** |
| BAGL | 1/2 | 1 | 9 | Schönefeld ✈ |
| | | 2 | 9 | Spandau |
| BAHU | 1/2 | 1 | | **kein Zugverkehr** |
| | | 2 | 1 | Wannsee |
| | | | 2 | Blankenfelde |
| | | | 25 | Teltow Stadt |
| | 3/4 | 3 | 1 | Oranienburg |
| | | 4 | 2 | Bernau |
| | | | 25 | Hennigsdorf |
| BALX | 3/4 | 3 | 7 | Ahrensfelde |
| | | | 9 | Schönefeld ✈ |
| | | 4 | 7 | Potsdam Hbf |
| | | | 9 | Spandau |
| BARF | 1 | 1 | 25 | Teltow Stadt |
| | | | 25 | Hennigsdorf |
| BATS | 1/2 | 1 | 2 | Blankenfelde |
| | | 2 | 2 | Bernau |
| BBAB | 1/2 | 1 | 7 | Potsdam Hbf |
| | | 2 | 7 | Ahrensfelde |
| BBCH | 1/2 | 1 | 2 | Blankenfelde |
| | | 2 | 2 | Bernau |
| BBDF | 1 | 1 | 5 | Ostbahnhof |
| | 2 | 2 | 5 | Mahlsdorf |
| BBER | 1/2 | 2 | 2 | **Ankunft** |
| | | | 2 | **Blankenfelde** |
| BBEU | 1/2 | 1 | 41 | Ring ⟳ |
| | | 2 | 42 | Ring ⟳ |
| | | | 42 | Halensee |
| BBEV | 3/4 | 3 | 7 | Ahrensfelde |
| | | | 9 | Schönefeld ✈ |
| | | 4 | 7 | Potsdam Hbf |
| | | | 9 | Spandau |
| BBFD | 3 | 3 | 2 | **Ankunft** |
| | | | 2 | **Bernau** |
| BBFE | 1/2 | | | **kein Zugverkehr** |
| BBGT | 1/2 | 1 | 1 | Wannsee |
| | | 2 | 1 | Oranienburg |
| BBIS | 1/2 | 1 | 5 | Mahlsdorf |
| | | 2 | 5 | Strausberg Nord |
| BBIW | 4/6 | 4 | 1 | Oranienburg |
| | | 6 | 1 | Wannsee |
| BBLB | 1/4 | 1 | 2 | Blankenfelde |
| | | 4 | 2 | Bernau |
| BBMW | 3/5 | 3 | 8 | Grünau |
| | | | 9 | Schönefeld ✈ |
| | | 5 | 46 | Königs Wusterhausen |
| | 4 | 4 | 46 | Südkreuz |
| | | | 8 | Pankow |
| | | | 9 | Spandau |
| BBOR | 1/2 | 1 | 1 | Oranienburg |
| | | 2 | 1 | Wannsee |
| BBOS | A | 1 | 1 | Wannsee |
| | | | 25 | Teltow Stadt |
| | | 2 | 2 | Blankenfelde |
| | | | 8 | Grünau |
| | B | 3 | 2 | Bernau |
| | | | 8 | Pankow |
| | | 4 | 1 | Oranienburg |
| | | | 25 | Hennigsdorf |
| BBRF | 1 | 1 | 2 | Bernau |
| | | | 2 | Blankenfelde |
| BBU | 1/2 | 1 | 2 | Blankenfelde |
| | | 2 | 2 | Bernau |
| BBUP | 1/2 | 1 | 41 | Ring ⟳ |
| | | | 41 | Westend |
| | | 2 | 42 | Ring ⟳ |

| | | | | |
|---|---|---|---|---|
| BCHS | 5/6 | 5 | | **kein Zugverkehr** |
| | | 6 | 7 | Ahrensfelde |
| | | | 9 | Schönefeld ✈ |
| | 7/8 | 7 | | **kein Zugverkehr** |
| | | 8 | 7 | Potsdam Hbf |
| | | | 9 | Spandau |
| BE | 31/32 | 31 | 3 | **Ankunft** |
| | | | 3 | **Ostkreuz** |
| | | 32 | | **kein Zugverkehr** |
| | 34 | 34 | | **kein Zugverkehr** |
| BEBD | 2 | 2 | 25 | Teltow Stadt |
| | | | 25 | Hennigsdorf |
| BEIW | 3/4 | 3 | 46 | Königs Wusterhausen |
| | | 4 | 46 | Südkreuz |
| BFA | 1/2 | 1 | 41 | Ring ⟳ |
| | | | 8 | Grünau |
| | | 2 | 42 | Ring ⟳ |
| | | | 8 | Pankow |
| BFB | 1/2 | 1 | 1 | Wannsee |
| | | 2 | 1 | Oranienburg |
| BFD | 15/16 | 15 | 5 | Strausberg Nord |
| | | 16 | 5 | Mahlsdorf |
| BFFO | 1/2 | 1 | 5 | Mahlsdorf |
| | | | 7 | Ahrensfelde |
| | | | 75 | Wartenberg |
| | | 2 | 5 | Ostbahnhof |
| | | | 7 | Potsdam Hbf |
| | | | 75 | Lichtenberg |
| BFLH ✈ | 11/13 | 11 | | **kein Zugverkehr** |
| | | 13 | 9 | **Ankunft** |
| | | | 9 | **Spandau** |
| BFOH | 1/2 | 1 | 1 | Oranienburg |
| | | 2 | 1 | Wannsee |
| BFRH | 1/2 | 1 | 3 | Ostkreuz |
| | | 2 | 3 | Erkner |
| BFRU | 1/2 | 1 | 1 | Wannsee |
| | | 2 | 1 | Oranienburg |
| BFST | 5/6 | 5 | 7 | Ahrensfelde |
| | | | 9 | Schönefeld ✈ |
| | | 6 | 7 | Potsdam Hbf |
| | | | 9 | Spandau |
| BFSTT | 11/12 | 11 | 1 | Wannsee |
| | | | 2 | Blankenfelde |
| | | | 25 | Teltow Stadt |
| | | 12 | 1 | Oranienburg |
| | | | 2 | Bernau |
| | | | 25 | Hennigsdorf |
| BGAS | 1/2 | 1 | 46 | Königs Wusterhausen |
| | | 2 | 8 | **Ankunft** |
| | 3/4 | 3 | 8 | **Pankow** |
| | | 4 | 46 | Südkreuz |
| BGB | 1/2 | 1 | 1 | Wannsee |
| | | | 2 | Blankenfelde |
| | | | 25 | Teltow Stadt |
| | | 2 | 42 | Ring ⟳ |
| | | | 42 | Halensee |
| | 3/4 | 3 | 41 | Ring ⟳ |
| | | 4 | 1 | Oranienburg |
| | | | 2 | Bernau |
| | | | 25 | Hennigsdorf |
| BGBA | 1/2 | 1 | 9 | Schönefeld ✈ |
| | | 2 | 9 | Spandau |
| BGGS | 1/2 | 1 | 1 | Wannsee |
| | | 2 | 1 | Oranienburg |
| BGRI | 1/2 | 1 | 7 | Potsdam Hbf |
| | | 2 | 7 | Ahrensfelde |
| BGSE | 51/52 | 51 | 75 | Wartenberg |
| | | 52 | 75 | Lichtenberg |
| BGSS | 1/2 | 1 | 41 | Ring ⟳ |
| | | | 8 | Grünau |
| | | 2 | 42 | Ring ⟳ |
| | | | 8 | Pankow |
| BGWD | 1/2 | 1 | 7 | Potsdam Hbf |
| | | 2 | | **kein Zugverkehr** |
| | 3/4 | 3 | | **kein Zugverkehr** |
| | | 4 | 7 | Ahrensfelde |
| BHAL | 1/2 | 1 | 41 | Ring ⟳ |
| | | | 41 | **Ring ⟳** |
| | | | 41 | Westend |
| | | 2 | 42 | Ring ⟳ |
| | | | 42 | **Ankunft** |

| | | | | |
|---|---|---|---|---|
| BHBF | 15/16 | 15 | 7 | Ahrensfelde |
| | | | 9 | Schönefeld ✈ |
| | | 16 | 7 | Potsdam Hbf |
| | | | 9 | Spandau |
| BHD | 1/5 | 1 | 25 | **Ankunft** |
| | | | 25 | **Teltow Stadt** |
| | | 5 | 25 | **Ankunft** |
| | | | 25 | **Teltow Stadt** |
| BHED | 1/2 | 1 | 1 | Oranienburg |
| | | 2 | 1 | Wannsee |
| BHEI | 1/2 | 1 | 41 | Ring ⟳ |
| | | | 41 | Westend |
| | | 2 | 42 | Ring ⟳ |
| BHER | 1/2 | 1 | 41 | Ring ⟳ |
| | | | 41 | Westend |
| | | | 46 | Südkreuz |
| | | 2 | 42 | Ring ⟳ |
| | | | 46 | Königs Wusterhausen |
| BHGM | 1 | 1 | 5 | Strausberg Nord |
| | | | 5 | Mahlsdorf |
| BHH | 1/2 | 1 | 75 | Wartenberg |
| | | 2 | 75 | Lichtenberg |
| BHI | 1/2 | 1 | 3 | Ostkreuz |
| | | 2 | 3 | Erkner |
| BHKM | 3/4 | 3 | 7 | Ahrensfelde |
| | | | 9 | Schönefelde ✈ |
| | | 4 | 7 | Potsdam Hbf |
| | | | 9 | Spandau |
| BHLS | 1/2 | 1 | 25 | Hennigsdorf |
| | | 2 | 25 | Teltow Stadt |
| BHN | 3/4 | 3 | 1 | Oranienburg |
| | | 4 | 1 | Wannsee |
| BHO | 1/2 | 1 | 41 | Ring ⟳ |
| | | | 41 | Westend |
| | | 2 | 42 | Ring ⟳ |
| BHPG | 4/5 | 4 | 5 | Strausberg Nord |
| | | | 5 | Mahlsdorf |
| | | 5 | | **kein Zugverkehr** |
| BHST | 1/2 | 1 | 9 | Schönefeld ✈ |
| | | 2 | 9 | Spandau |
| BHUM | 1/2 | 1 | 1 | Wannsee |
| | | | 2 | Blankenfelde |
| | | | 25 | Teltow Stadt |
| | | 2 | 1 | Oranienburg |
| | | | 2 | Bernau |
| | | | 25 | Hennigsdorf |
| BIP | 1/2 | 1 | 41 | Ring ⟳ |
| | | | 41 | Westend |
| | | 2 | 42 | Ring ⟳ |
| BJB | 3/4 | 3 | 7 | Ahrensfelde |
| | | | 9 | Schönefeld ✈ |
| | | 4 | 7 | Potsdam Hbf |
| | | | 9 | Spandau |
| BJLB | 1/2 | 1 | 1 | Wannsee |
| | | 2 | 1 | Oranienburg |
| BJUN | 5/6 | 5 | 41 | Ring ⟳ |
| | | 6 | 42 | Ring ⟳ |
| | | | 42 | Halensee |
| BKAD | 1/2 | 1 | 5 | Mahlsdorf |
| | | 2 | 5 | Strausberg Nord |
| BKBO | 2 | 2 | 25 | Teltow Stadt |
| | | | 25 | Hennigsdorf |
| BKHD | 1/2 | 1 | 46 | Südkreuz |
| | | 2 | 46 | Königs Wusterhausen |
| BKLH | 11/12 | 11 | 3 | Ostkreuz |
| | | 12 | 3 | Erkner |
| BKPK | 1/2 | 1 | 3 | Ostkreuz |
| | | 2 | 3 | Erkner |
| BKRW | 3/4 | 3 | 2 | Bernau |
| | | 4 | 2 | Blankenfelde |
| BKW | 2 | 2 | 46 | **Ankunft** |
| | | | 46 | **Südkreuz** |
| BLAK | 2 | 2 | 25 | Teltow Stadt |
| | | | 25 | Hennigsdorf |
| BLEN | 1/2 | 1 | 1 | Oranienburg |
| | | 2 | 1 | Wannsee |

| | | | | |
|---|---|---|---|---|
| BLI | 1/2 | 1 | 5 | Mahlsdorf |
| | | | 7 | Ahrensfelde |
| | | | 75 | **Wartenberg** |
| | | 2 | 5 | Ostbahnhof |
| | | | 7 | Potsdam Hbf |
| | | | 75 | **Ankunft** |
| BLIO | 1/2 | 1 | 25 | Teltow Stadt |
| | | 2 | 25 | Hennigsdorf |
| BLIS | 1/2 | 1 | 25 | Teltow Stadt |
| | | 2 | 25 | Hennigsdorf |
| BLRD | 1/2 | 1 | 2 | Blankenfelde |
| | | | 2 | Bernau |
| | | 2 | | kein Zugverkehr |
| BLST | 1/2 | 1 | 41 | Ring ⟲ |
| | | | 8 | Grünau |
| | | 2 | 42 | Ring ⟲ |
| | | | 42 | Halensee |
| | | | 8 | Pankow |
| BLWE | 1/2 | 1 | 1 | Wannsee |
| | | 2 | 1 | Oranienburg |
| BMAH | 2/3 | 2 | 2 | Bernau |
| | | 3 | 2 | Blankenfelde |
| BMAZ | 1/2 | 1 | 7 | Ahrensfelde |
| | | 2 | 7 | Potsdam Hbf |
| BMDF | 1/2 | | | kein Zugverkehr |
| | 3/4 | 3 | 5 | **Ankunft** |
| | | | 5 | **Ostbahnhof** |
| | | 4 | 5 | **Ankunft** |
| | | | 5 | **Strausberg Nord** |
| BMEA | 1/2 | 1 | 7 | Ahrensfelde |
| | | 2 | 7 | Potsdam Hbf |
| BMEX | 1/2 | 1 | 1 | Wannsee |
| | | 2 | 1 | Oranienburg |
| BMF | 1/2 | 1 | 2 | Blankenfelde |
| | | 2 | 2 | Bernau |
| BMM | 6 | 6 | | kein Zugverkehr |
| BMN | 1/2 | 1 | 41 | Ring ⟲ |
| | | | 41 | Westend |
| | | 2 | 42 | Ring ⟲ |
| | | | 42 | Halensee |
| BMS | 1/2 | 1 | 9 | Schönefeld ✈ |
| | | 2 | 9 | Spandau |
| BNB | 1/2 | 1 | 1 | Wannsee |
| | | | 2 | Blankenfelde |
| | | | 25 | Teltow Stadt |
| | | 2 | | kein Zugverkehr |
| | 3/4 | 3 | | kein Zugverkehr |
| | | 4 | 1 | Oranienburg |
| | | | 2 | Bernau |
| | | | 25 | Hennigsdorf |
| BNIS | 3/4 | 3 | 7 | Potsdam Hbf |
| | | 4 | 7 | Ahrensfelde |
| BNIW | 1/2 | 1 | 1 | Wannsee |
| | | 2 | 1 | Oranienburg |
| BNG | 1 | 1 | 5 | Strausberg Nord |
| | | | 5 | Mahlsdorf |
| BNK | 1/2 | 1 | 41 | Ring ⟲ |
| | | | 41 | Westend |
| | | | 46 | Südkreuz |
| | | 2 | 42 | Ring ⟲ |
| | | | 46 | Königs Wusterhausen |
| BNPL | 1/2 | 1 | 5 | Mahlsdorf |
| | | | 7 | Ahrensfelde |
| | | 2 | 5 | Ostbahnhof |
| | | | 7 | Potsdam Hbf |
| BOK | F | 11 | 41 | Ring ⟲ |
| | | | 41 | Westend |
| | | | 8 | Grünau |
| | | 12 | 42 | Ring ⟲ |
| | | | 42 | Halensee |
| | | | 8 | Pankow |
| BOKS | D | 5 | 3 | Ostbahnhof |
| | | | 5 | Ostbahnhof |
| | | 6 | 7 | Potsdam Hbf |
| | E | 3 | 3 | Erkner |
| | | | 7 | Ahrensfelde |
| | | 4 | 5 | Mahlsdorf |
| BOLS | A | 1 | 9 | Schönefeld ✈ |
| | | 2 | 9 | Spandau |
| BORB | A | 30 | 1 | **Ankunft** |
| | | | 1 | **Wannsee** |
| | | 32 | | kein Zugverkehr |

| | | | | |
|---|---|---|---|---|
| BORS | 1/2 | 1 | 1 | Wannsee |
| | | | 2 | Blankenfelde |
| | | | 25 | Teltow Stadt |
| | | 2 | 1 | Oranienburg |
| | | | 2 | Bernau |
| | | | 25 | Hennigsdorf |
| BOSB | D | 8 | 7 | Ahrensfelde |
| | | | 9 | Schönefeld ✈ |
| | | 9 | 5 | **Ankunft** |
| | | | 5 | **Mahlsdorf** |
| | E | 10 | 3 | **Ankunft** |
| | | | 3 | **Erkner** |
| | | 11 | 7 | Potsdam Hbf |
| | | | 9 | Spandau |
| BOSP | 1 | 1 | 47 | Spindlersfeld |
| | | | 47 | Schöneweide |
| BOSS | 1/2 | 1 | 25 | Teltow Stadt |
| | | 2 | 25 | Hennigsdorf |
| BPDH | C | 6 | 7 | **Ankunft** |
| | | | 7 | **Ahrensfelde** |
| | | 7 | | kein Zugverkehr |
| BPEN | 1 | 1 | 5 | Strausberg Nord |
| | | | 5 | Mahlsdorf |
| BPHD | 1/2 | 1 | 2 | Blankenfelde |
| | | 2 | 2 | Bernau |
| BPIC | 1/2 | 1 | 9 | Schönefeld ✈ |
| | | 2 | 9 | Spandau |
| BPKW | 1/2 | 1 | 2 | Bernau |
| | | | 8 | **Ankunft** |
| | | 2 | 2 | Blankenfelde |
| | | | 8 | **Grünau** |
| BPLA | 1/2 | 1 | 41 | Ring ⟲ |
| | | | 8 | Grünau |
| | | 2 | 42 | Ring ⟲ |
| | | | 42 | Halensee |
| | | | 8 | Pankow |
| BPOE | 1/2 | 1 | 7 | Ahrensfelde |
| | | 2 | 7 | Potsdam Hbf |
| BPOP | A | 11 | 1 | Wannsee |
| | | | 2 | Blankenfelde |
| | | | 25 | Teltow Stadt |
| | | 12 | | kein Zugverkehr |
| | B | 13 | | kein Zugverkehr |
| | | 14 | 1 | Oranienburg |
| | | | 2 | Bernau |
| | | | 25 | Hennigsdorf |
| BPRS | A | 1 | 2 | Blankenfelde |
| | | 3 | 25 | Teltow Stadt |
| | B | 2 | 2 | Bernau |
| | | 4 | 25 | Hennigsdorf |
| BPWA | 3/4 | 3 | 8 | Grünau |
| | | | 9 | Schönefeld ✈ |
| | | 4 | 8 | Pankow |
| | | | 9 | Spandau |
| BRB | 1/2 | 1 | 3 | Ostkreuz |
| | | 2 | 3 | Erkner |
| BRD | 1/2 | 1 | 3 | Ostkreuz |
| | | 2 | 3 | Erkner |
| BRGT | 1 | 1 | 2 | Blankenfelde |
| | | | 2 | Bernau |
| BRH | 1/2 | 1 | 3 | Ostkreuz |
| | | 2 | 3 | Erkner |
| BRST | 1/2 | 1 | 1 | Wannsee |
| | | 2 | 1 | Oranienburg |
| BRW | 1/2 | 1 | 7 | Ahrensfelde |
| | | 2 | 7 | Potsdam Hbf |
| BSAL | 1/2 | 1 | 41 | Ring ⟲ |
| | | | 8 | Grünau |
| | | 2 | 42 | Ring ⟲ |
| | | | 42 | Halensee |
| | | | 8 | Pankow |
| BSAP | 3/4 | 3 | 7 | Ahrensfelde |
| | | | 9 | Schönefeld ✈ |
| | | 4 | 7 | Potsdam Hbf |
| | | | 9 | Spandau |
| BSC | 1/2 | 1 | 2 | Blankenfelde |
| | | 2 | 2 | Bernau |
| BSCF | 3/4 | 3 | 46 | Königs Wusterhausen |
| | | | 8 | Grünau |
| | | | 9 | Schönefeld ✈ |
| | | 4 | 46 | Südkreuz |
| | | | 8 | Pankow |
| | | | 9 | Spandau |

| | | | | |
|---|---|---|---|---|
| BSLS | 1/2 | 1 | 1 | Wannsee |
| | | 2 | 1 | Oranienburg |
| BSDE | 1/2 | 1 | 25 | Teltow Stadt |
| | | 2 | 25 | Hennigsdorf |
| BSDG | 1/2 | 1 | 1 | Wannsee |
| | | 2 | 1 | Oranienburg |
| BSGR | 11/12 | 11 | 41 | Ring ⟲ |
| | | | 41 | Westend |
| | | 12 | 42 | Ring ⟲ |
| BSGV | 1/2 | 1 | 1 | Wannsee |
| | | 2 | 1 | Oranienburg |
| BSKR | 11/12 | 11 | 41 | Ring ⟲ |
| | | | 41 | Westend |
| | | | 46 | **Ankunft** |
| | | 12 | 42 | Ring ⟲ |
| | | | 46 | **Königs Wusterhausen** |
| BSKV | 1/2 | 1 | 2 | Blankenfelde |
| | | | 25 | Teltow Stadt |
| | | 2 | 2 | Bernau |
| | | | 25 | Hennigsdorf |
| BSNF | 6/8 | | | kein Zugverkehr |
| BSNH | 3/4 | 3 | 1 | Oranienburg |
| | | | 25 | Hennigsdorf |
| | | 4 | 1 | Wannsee |
| | | | 25 | Teltow Stadt |
| BSO | 1/2 | 1 | 41 | Ring ⟲ |
| | | | 41 | Westend |
| | | 2 | 42 | Ring ⟲ |
| BSPA | 1/2 | 1 | 9 | **Ankunft** |
| | | | 9 | **Schönefeld ✈** |
| | | 2 | 9 | **Ankunft** |
| | | | 9 | **Schönefeld ✈** |
| BSPF | 1 | 1 | 47 | **Ankunft** |
| | | | 47 | **Schöneweide** |
| BSPH | 20/21 | 20 | 7 | Potsdam Hbf |
| | | | 75 | Lichtenberg |
| | | 21 | 7 | Ahrensfelde |
| | | | 75 | Wartenberg |
| BSRW | 1/2 | 1 | 9 | Spandau |
| | | 2 | 9 | Schönefeld ✈ |
| BSTN | 1 | 1 | 5 | **Ankunft** |
| | | | 5 | **Mahlsdorf** |
| BSTO | 1/2 | 1 | 41 | Ring ⟲ |
| | | | 8 | Grünau |
| | | 2 | 42 | Ring ⟲ |
| | | | 42 | Halensee |
| | | | 8 | Pankow |
| BSTR | 1 | 1 | 5 | Strausberg Nord |
| | | | 5 | Mahlsdorf |
| BSTV | 8/9 | 8 | 5 | Strausberg Nord |
| | | | 5 | Mahlsdorf |
| | | 9 | | kein Zugverkehr |
| BSW | 3/4 | 3 | 46 | Königs Wusterhausen |
| | | | 8 | Grünau |
| | | | 9 | Schönefeld ✈ |
| | | 4 | | kein Zugverkehr |
| | 5/6 | 5 | | kein Zugverkehr |
| | | 6 | 46 | Südkreuz |
| | | | 47 | **Ankunft** |
| | | | 47 | **Spindlersfeld** |
| | | | 8 | Pankow |
| | | | 9 | Spandau |
| BSZF | 1 | 1 | 25 | Teltow Stadt |
| | | | 25 | Hennigsdorf |
| BTG | 1/6 | 1 | 25 | Hennigsdorf |
| | | 6 | 25 | Teltow Stadt |
| BTGN | 3/4 | 3 | 7 | Ahrensfelde |
| | | | 9 | Schönefeld ✈ |
| | | 4 | 7 | Potsdam Hbf |
| | | | 9 | Spandau |
| BTHF | 1/2 | 1 | 41 | Ring ⟲ |
| | | | 41 | Westend |
| | | | 46 | Südkreuz |
| | | 2 | 42 | Ring ⟲ |
| | | | 46 | Königs Wusterhausen |
| BTLS | 1/2 | 1 | | kein Zugverkehr |
| | | 2 | 25 | **Ankunft** |
| | | | 25 | **Hennigsdorf** |

| | | | | |
|---|---|---|---|---|
| BTOR | 1/2 | 1 | 1 | Wannsee |
| | | | 2 | Blankenfelde |
| | | | 25 | Teltow Stadt |
| | | 2 | 1 | Oranienburg |
| | | | 2 | Bernau |
| | | | 25 | Hennigsdorf |
| BTP | A | 1 | 41 | Ring ⟲ |
| | | | 41 | Westend |
| | | 3 | 8 | Grünau |
| | | | 9 | Schönefeld ✈ |
| | B | 2 | 42 | Ring ⟲ |
| | | | 8 | Pankow |
| | | 4 | 9 | Spandau |
| BWAB | 11/12 | 11 | | kein Zugverkehr |
| | | 12 | 75 | **Ankunft** |
| | | | 75 | **Lichtenberg** |
| BWAI | 1/2 | 1 | 1 | Oranienburg |
| | | 2 | 1 | Wannsee |
| BWED | 1/2 | 1 | 41 | Ring ⟲ |
| | | 2 | 42 | Ring ⟲ |
| | | | 42 | Halensee |
| BWES | 1/2 | 1 | 41 | Ring ⟲ |
| | | | 41 | **Ankunft** |
| | | 2 | 42 | Ring ⟲ |
| | | | 42 | **Ring ⟲** |
| | | | 42 | Halensee |
| BWH | | 1 | 41 | Ring ⟲ |
| | | 2 | 42 | Ring ⟲ |
| | | | 42 | Westend |
| BWHH | 1/2 | 1 | 3 | Ostkreuz |
| | | 2 | 3 | Erkner |
| BWI | 3/4 | 3 | 46 | Königs Wusterhausen |
| | | 4 | 46 | Südkreuz |
| BWIG | 1/2 | 1 | 3 | Ostkreuz |
| | | 2 | 3 | Erkner |
| BWIN | | 1 | 1 | Oranienburg |
| | | 2 | 1 | Wannsee |
| BWKRR | 11/12 | 11 | 41 | Ring ⟲ |
| | | | 41 | Westend |
| | | 12 | 42 | Ring ⟲ |
| | | | 42 | Halensee |
| BWKS | A | 1 | 7 | Potsdam Hbf |
| | | | 9 | Spandau |
| | | 2 | | kein Zugverkehr |
| | B | 3 | | kein Zugverkehr |
| | | 4 | 7 | Ahrensfelde |
| | | | 9 | Schönefeld ✈ |
| BWM | 1/2 | 1 | 1 | Oranienburg |
| | | 2 | 1 | Wannsee |
| BWOK | 3/4 | 3 | 1 | Oranienburg |
| | | | 25 | Hennigsdorf |
| | | 4 | 1 | Wannsee |
| | | | 25 | Teltow Stadt |
| BWRS | A | 1 | 3 | Erkner |
| | | | 7 | Ahrensfelde |
| | | | 9 | Schönefeld ✈ |
| | | 2 | 5 | Mahlsdorf |
| | B | 3 | 3 | Ostbahnhof |
| | | | 5 | Ostbahnhof |
| | | 4 | 7 | Potsdam Hbf |
| | | | 9 | Spandau |
| BWSS | A | 1 | 7 | Potsdam Hbf |
| | | 2 | 1 | **Ankunft** |
| | B | 3 | 1 | **Oranienburg** |
| | | 4 | 7 | Ahrensfelde |
| BWT | 11/1 | 11 | 5 | Ostbahnhof |
| | | 1 | U5 | Alexanderplatz |
| | 12/2 | 2 | U5 | Hönow |
| | | 12 | 5 | Mahlsdorf |
| BYOR | 1/2 | 1 | 2 | Blankenfelde |
| | | | 25 | Teltow Stadt |
| | | 2 | 2 | Bernau |
| | | | 25 | Hennigsdorf |
| BZD | 1/2 | 1 | 1 | Wannsee |
| | | 2 | 1 | Oranienburg |
| BZEP | 4/6 | 4 | 2 | Bernau |
| | | 6 | 2 | Blankenfelde |
| BZOS | 5/6 | 5 | 7 | Ahrensfelde |
| | | | 9 | Schönefeld ✈ |
| | | 6 | 7 | Potsdam Hbf |
| | | | 9 | Spandau |
| BZTH | 3/4 | 3 | 46 | Königs Wusterhausen |
| | | 4 | 46 | Südkreuz |

| | | | | |
|---|---|---|---|---|
| A | 1/2 | 1 | 2 | Ruhleben |
| | | 2 | 2 | Pankow |
| Ad | 1/2 | 1 | 7 | Rudow |
| | | 2 | 7 | Rathaus Spandau |
| Afr | 1/2 | 1 | 6 | Alt-Mariendorf |
| | | 2 | 6 | Alt-Tegel |
| Al | 1/3 | 1 | 5 | **Ankunft** |
| | | | 5 | **Hönow** |
| | | 3 | | kein Zugverkehr |
| | 2/4 | 2 | 5 | **Ankunft** |
| | | | 5 | **Hönow** |
| | | 4 | | kein Zugverkehr |
| Am | 1/2 | 1 | 9 | Rathaus Steglitz |
| | | 2 | 9 | Osloer Straße |
| Ap | 1/2 | 1 | 8 | Hermannstraße |
| | | 2 | 8 | Wittenau |
| AS | 1/2 | 1 | 7 | Rudow |
| | | 2 | 7 | Rathaus Spandau |
| At | 1/2 | 1 | 6 | Alt-Mariendorf |
| | | 2 | 6 | Alt-Tegel |
| Au | 1 | 1 | 3 | Krumme Lanke |
| | 2 | 2 | 3 | Warschauer Straße |
| B | 1/2 | 1 | 8 | Hermannstraße |
| | | 2 | 8 | Wittenau |
| Beo | 1 | 1 | 9 | Rathaus Steglitz |
| | 2 | 2 | 9 | Osloer Straße |
| Beu | 1/2 | 1 | 7 | Rudow |
| | | 2 | 7 | Rathaus Spandau |
| Bi | 1/2 | 1 | 9 | Rathaus Steglitz |
| | | 2 | 9 | Osloer Straße |
| Bk | 1/2 | 1 | 6 | Alt-Mariendorf |
| | | 2 | 6 | Alt-Tegel |
| Bl | 1/2 | 1 | 7 | Rudow |
| | | 2 | 7 | Rathaus Spandau |
| Bli | 1/2 | 1 | 7 | Rudow |
| | | 2 | 7 | Rathaus Spandau |
| Bmo | 1 | 1 | 2 | Ruhleben |
| | 2 | 2 | 2 | Pankow |
| Bmu | 1/2 | 1 | 7 | Rudow |
| | | 2 | 7 | Rathaus Spandau |
| Bo | 1/2 | 1 | 8 | Hermannstraße |
| | | 2 | 8 | Wittenau |
| Bpo | 1/2 | 1 | 4 | Innsbrucker Platz |
| | | 2 | 4 | Nollendorfplatz |
| Bpu | 1/2 | 1 | 7 | Rudow |
| | | 2 | 7 | Rathaus Spandau |
| Br | 1/2 | 1 | 7 | Rudow |
| | | 2 | 7 | Rathaus Spandau |
| BRT | 1/2 | 1 | 55 | **Ankunft** |
| | | | 55 | **Hauptbahnhof** |
| | | 2 | | kein Zugverkehr |
| Bs | 1 | 1 | 2 | Ruhleben |
| | 2 | 2 | 2 | Pankow |
| Bt | 1/2 | 1 | 3 | Krumme Lanke |
| | | 2 | 3 | Warschauer Straße |
| Bu | 1 | 1 | 9 | Rathaus Steglitz |
| | 2 | 2 | 9 | Osloer Straße |
| Bü | 1 | 1 | 5 | Alexanderplatz |
| | 2/3 | 2 | 5 | Hönow |
| | | 3 | 5 | **Alexanderplatz** |
| BUN | 1/2 | 1 | 55 | Brandenburger Tor |
| | | | 55 | Hauptbahnhof |
| | | 2 | | kein Zugverkehr |
| C | 1/2 | 1 | 5 | Alexanderplatz |
| | | 2 | 5 | Hönow |
| Dd | 1/2 | 1 | 3 | Krumme Lanke |
| | | 2 | 3 | Warschauer Straße |
| E | 1/2 | 1 | 5 | Alexanderplatz |
| | | 2 | 5 | Hönow |
| EB | 1/2 | 1 | 2 | Ruhleben |
| | | 2 | 2 | Pankow |
| Ei | 1/2 | 1 | 7 | Rudow |
| | | 2 | 7 | Rathaus Spandau |
| F | 1/2 | 1 | 6 | Alt-Mariendorf |
| | | 2 | 6 | Alt-Tegel |
| Ff | 1/2 | 1 | 5 | Alexanderplatz |
| | | 2 | 5 | Hönow |

| | | | | |
|---|---|---|---|---|
| Fi | 1/2 | 1 | 5 | Alexanderplatz |
| | | 2 | 5 | Hönow |
| FN | 1/2 | 1 | 8 | Hermannstraße |
| | | 2 | 8 | Wittenau |
| Fpo | 1/2 | 1 | 3 | Krumme Lanke |
| | | 2 | 3 | Warschauer Straße |
| Fpu | 1/2 | 1 | 7 | Rudow |
| | | 2 | 7 | Rathaus Spandau |
| Fr | 1/2 | 1 | 6 | Alt-Mariendorf |
| | | 2 | 6 | Alt-Tegel |
| Ft | 1/2 | 1 | 5 | Alexanderplatz |
| | | 2 | 5 | Hönow |
| Fw | 1/2 | 1 | 9 | Rathaus Steglitz |
| | | 2 | 9 | Osloer Straße |
| Gb | 1/2 | 1 | 8 | Hermannstraße |
| | | 2 | 8 | Wittenau |
| GK | 1/2 | 1 | 5 | Alexanderplatz |
| | | 2 | 5 | Hönow |
| Go | 1/2 | 1 | 1 | Uhlandstraße |
| | | | 3 | Krumme Lanke |
| | | 2 | 1 | Warschauer Straße |
| | | | 3 | Warschauer Straße |
| Gr | 1 | 1 | 1 | Uhlandstraße |
| | | | 3 | Krumme Lanke |
| | 2 | 2 | 1 | Warschauer Straße |
| | | | 3 | Warschauer Straße |
| Gs | 1/2 | 1 | 7 | Rudow |
| | | 2 | 7 | Rathaus Spandau |
| Gt | 1/2 | 1 | 9 | Rathaus Steglitz |
| | | 2 | 9 | Osloer Straße |
| Gu | 1/2 | 1 | 2 | Ruhleben |
| | | 2 | 2 | Pankow |
| Gz | 1/2 | 1 | 7 | Rudow |
| | | 2 | 7 | Rathaus Spandau |
| Ha | 1/2 | 1 | 9 | Rathaus Steglitz |
| | | 2 | 9 | Osloer Straße |
| Hb | 1/2 | 1 | 3 | Krumme Lanke |
| | | 2 | 3 | Warschauer Straße |
| HBF | 1/2 | 1 | 55 | **Ankunft** |
| | | | 55 | **Brandenburger Tor** |
| | | 2 | | kein Zugverkehr |
| Hd | 1/2 | 1 | 5 | Alexanderplatz |
| | | 2 | 5 | Hönow |
| He | 1/2 | 1 | 8 | Hermannstraße |
| | | 2 | 8 | Wittenau |
| Hh | 1/2 | 1 | 6 | Alt-Mariendorf |
| | | 2 | 6 | Alt-Tegel |
| Hl | 1/2 | 1 | 7 | Rudow |
| | | 2 | 7 | Rathaus Spandau |
| HMS | 1/2 | 1 | 8 | **Ankunft** |
| | | | 8 | **Wittenau** |
| | | 2 | 8 | **Ankunft** |
| | | | 8 | **Wittenau** |
| Ho | 1 | 1 | 1 | Uhlandstraße |
| | | | 3 | Krumme Lanke |
| | 2 | 2 | 1 | Warschauer Straße |
| | | | 3 | Warschauer Straße |
| Hö | 1/2 | 1 | 5 | **Ankunft** |
| | | | 5 | **Alexanderplatz** |
| | | 2 | 5 | **Ankunft** |
| | | | 5 | **Alexanderplatz** |
| | 3 | 3 | 5 | kein Zugverkehr |
| Hpo | 1/2 | 1 | 8 | Hermannstraße |
| | | 2 | 8 | Wittenau |
| Hpu | 1/2 | 1 | 7 | Rudow |
| | | 2 | 7 | Rathaus Spandau |
| Hs | 1/2 | 1 | 7 | Rudow |
| | | 2 | 7 | Rathaus Spandau |
| Hu | 1/2 | 1 | 6 | Alt-Mariendorf |
| | | 2 | 6 | Alt-Tegel |
| Hv | 1/2 | 1 | 2 | Ruhleben |
| | | 2 | 2 | Pankow |
| Hz | 1/2 | 1 | 3 | Krumme Lanke |
| | | 2 | 3 | Warschauer Straße |
| Ip | 1/2 | 1 | 4 | **Ankunft** |
| | | | 4 | **Nollendorfplatz** |
| | | 2 | 4 | **Ankunft** |
| | | | 4 | **Nollendorfplatz** |

| | | | | |
|---|---|---|---|---|
| Jho | 1/3 | 1 | 7 | Rudow |
| | | 3 | | kein Zugverkehr |
| Jhu | 2/4 | 2 | 7 | Rathaus Spandau |
| | | 4 | | kein Zugverkehr |
| JK | 1/2 | 1 | 7 | Rudow |
| | | 2 | 7 | Rathaus Spandau |
| Jn | 1/2 | 1 | 8 | Hermannstraße |
| | | 2 | 8 | Wittenau |
| Jt | 1/2 | 1 | 7 | Rudow |
| | | 2 | 7 | Rathaus Spandau |
| K | 1/2 | 1 | 3 | **Ankunft** |
| | | | 3 | **Warschauer Straße** |
| | | 2 | 3 | **Ankunft** |
| | | | 3 | **Warschauer Straße** |
| Ka | 1/2 | 1 | 6 | Alt-Mariendorf |
| | | 2 | 6 | Alt-Tegel |
| KB | 1/2 | 1 | 8 | Hermannstraße |
| | | 2 | 8 | Wittenau |
| Kbo | 1/2 | 1 | 1 | Uhlandstraße |
| | | | 3 | Krumme Lanke |
| | | 2 | 1 | Warschauer Straße |
| | | | 3 | Warschauer Straße |
| Kbu | 1/2 | 1 | 8 | Hermannstraße |
| | | 2 | 8 | Wittenau |
| Kd | 1 | 1 | 2 | Ruhleben |
| | 2 | 2 | 2 | Pankow |
| Kfo | 1 | 1 | 1 | Uhlandstraße |
| | 2 | 2 | 1 | Warschauer Straße |
| Kfu | 1/2 | 1 | 9 | Rathaus Steglitz |
| | | 2 | 9 | Osloer Straße |
| KL | 1/2 | 1 | 5 | Alexanderplatz |
| | | 2 | 5 | Hönow |
| KM | 1/2 | 1 | 7 | Rudow |
| | | 2 | 7 | Rathaus Spandau |
| Kn | 1/2 | 1 | 7 | Rudow |
| | | 2 | 7 | Rathaus Spandau |
| Ko | 1/2 | 1 | 2 | Ruhleben |
| | | 2 | 2 | Pankow |
| Ks | 1/2 | 1 | 6 | Alt-Mariendorf |
| | | 2 | 6 | Alt-Tegel |
| Kt | 1/2 | 1 | 7 | Rudow |
| | | 2 | 7 | Rathaus Spandau |
| Kus | 1/2 | 1 | 1 | Uhlandstraße |
| | | | 3 | Krumme Lanke |
| | | 2 | 1 | Warschauer Straße |
| | | | 3 | Warschauer Straße |
| L | 1/2 | 1 | 8 | Hermannstraße |
| | | 2 | 8 | Wittenau |
| La | 1/2 | 1 | 7 | Rudow |
| | | 2 | 7 | Rathaus Spandau |
| LD | 1 | 1 | 8 | Hermannstraße |
| | 2 | 2 | 8 | Wittenau |
| Li | 1/2 | 1 | 5 | Alexanderplatz |
| | | 2 | 5 | Hönow |
| LL | 1/2 | 1 | 5 | Alexanderplatz |
| | | 2 | 5 | Hönow |
| Lpo | 1 | 1 | 6 | Alt-Mariendorf |
| | 2 | 2 | 6 | Alt-Tegel |
| Lpu | 1/2 | 1 | 9 | Rathaus Steglitz |
| | | 2 | 9 | Osloer Straße |
| Lu | 1/2 | 1 | 2 | Ruhleben |
| | | 2 | 2 | Pankow |
| MB | 1 | 1 | 2 | Ruhleben |
| | 2 | 2 | 2 | Pankow |
| Md | 1/2 | 1 | 5 | Alexanderplatz |
| | | 2 | 5 | Hönow |
| Me | 1/3 | 1 | 6 | Alt-Mariendorf |
| | | 3 | 7 | Rudow |
| | 2/4 | 2 | 6 | Alt-Tegel |
| | | 4 | 7 | Rathaus Spandau |
| Mf | 1/2 | 1 | 6 | **Ankunft** |
| | | | 6 | **Alt-Tegel** |
| | | 2 | 6 | **Ankunft** |
| | | | 6 | **Alt-Tegel** |
| MH | 1/2 | 1 | 2 | Ruhleben |
| | | 2 | 2 | Pankow |
| Mi | 1/2 | 1 | 2 | Ruhleben |
| | | 2 | 2 | Pankow |
| Mic | 1/2 | 1 | 6 | Alt-Mariendorf |
| | | 2 | 6 | Alt-Tegel |

| | | | | |
|---|---|---|---|---|
| Mk | 1/2 | 1 | 2 | Ruhleben |
| | | 2 | 2 | Pankow |
| Mo | 1 | 1 | 1 | Uhlandstraße |
| | | | 3 | Krumme Lanke |
| | 2 | 2 | 1 | Warschauer Straße |
| | | | 3 | Warschauer Straße |
| Mp | 1/2 | 1 | 7 | Rudow |
| | | 2 | 7 | Rathaus Spandau |
| Mr | 1/2 | 1 | 8 | Hermannstraße |
| | | 2 | 8 | Wittenau |
| Mu | 1/2 | 1 | 7 | Rudow |
| | | 2 | 7 | Rathaus Spandau |
| NA | 1/2 | 1 | 6 | Alt-Mariendorf |
| | | 2 | 6 | Alt-Tegel |
| Nd | 1/2 | 1 | 2 | Ruhleben |
| | | 2 | 2 | Pankow |
| Nk | 1/2 | 1 | 7 | Rudow |
| | | 2 | 7 | Rathaus Spandau |
| Nm | 2/4 | 2 | 1 | Warschauer Straße |
| | | | 3 | Warschauer Straße |
| | | | 3 | **Ankunft** |
| | | 4 | 4 | **Ankunft** |
| | | | 4 | **Innsbrucker Platz** |
| No | 1 | 1 | 2 | Ruhleben |
| | 2 | 2 | 2 | Pankow |
| Np | 1/2 | 1 | 9 | Rathaus Steglitz |
| | | 2 | 9 | Osloer Straße |
| Nu | 1/3 | 1 | 1 | Uhlandstraße |
| | | | 3 | Krumme Lanke |
| | | 3 | 3 | **Krumme Lanke** |
| Ob | 1/2 | 1 | 6 | Alt-Mariendorf |
| | | 2 | 6 | Alt-Tegel |
| Obi | 1/3 | 1 | 2 | Ruhleben |
| | | 3 | | kein Zugverkehr |
| | 2/4 | 2 | 2 | Pankow |
| | | 4 | | kein Zugverkehr |
| Olo | 1/2 | 1 | 9 | **Rathaus Steglitz** |
| | | 2 | 9 | **Ankunft** |
| Olu | 1/2 | 1 | 8 | Hermannstraße |
| | | 2 | 8 | Wittenau |
| Os | 1/2 | 1 | 3 | Krumme Lanke |
| | | 2 | 3 | Warschauer Straße |
| Ot | 1/2 | 1 | 3 | Krumme Lanke |
| | | 2 | 3 | Warschauer Straße |
| OTI | 1/2 | 1 | 6 | Alt-Mariendorf |
| | | 2 | 6 | Alt-Tegel |
| P | 1/2 | 1 | 7 | Rudow |
| | | 2 | 7 | Rathaus Spandau |
| PA | 1/2 | 1 | 2 | **Ruhleben** |
| | | 2 | 2 | **Ankunft** |
| PB | 1/2 | 1 | 8 | Hermannstraße |
| | | 2 | 8 | Wittenau |
| Pd | 1/2 | 1 | 2 | Ruhleben |
| | | 2 | 2 | Pankow |
| Pi | 1/2 | 1 | 7 | Rudow |
| | | 2 | 7 | Rathaus Spandau |
| Pk | 1/2 | 1 | 8 | Hermannstraße |
| | | 2 | 8 | Wittenau |
| PL | 1/2 | 1 | 6 | Alt-Mariendorf |
| | | 2 | 6 | Alt-Tegel |
| Po | 1/2 | 1 | 3 | Krumme Lanke |
| | | 2 | 3 | Warschauer Straße |
| Pr | 1 | 1 | 1 | Uhlandstraße |
| | | | 3 | Krumme Lanke |
| | 2 | 2 | 1 | Warschauer Straße |
| | | | 3 | Warschauer Straße |
| Ps | 1/2 | 1 | 6 | Alt-Mariendorf |
| | | 2 | 6 | Alt-Tegel |
| R | 1/2 | 1 | 7 | **Ankunft** |
| | | 2 | 7 | **Rathaus Spandau** |
| Rb | 1/2 | 1 | 6 | Alt-Mariendorf |
| | | 2 | 6 | Alt-Tegel |
| Rd | 1/2 | 1 | 3 | Krumme Lanke |
| | | 2 | 3 | Warschauer Straße |
| RE | 1/2 | 1 | 8 | Hermannstraße |
| | | 2 | 8 | Wittenau |
| Ri | 1/2 | 1 | 6 | Alt-Mariendorf |
| | | 2 | 6 | Alt-Tegel |
| Rk | 1/2 | 1 | 7 | Rudow |
| | | 2 | 7 | Rathaus Spandau |

| | | | | |
|---|---|---|---|---|
| Rl | 1/2 | 1 | 2 | **Ankunft** |
| | | 2 | 2 | **Pankow** |
| | | 2 | 2 | **Ankunft** |
| | | 2 | 2 | **Pankow** |
| Rm | 1/2 | 1 | 7 | Rudow |
| | | 2 | 7 | Rathaus Spandau |
| Ro | 1/2 | 1 | 8 | Hermannstraße |
| | | 2 | 8 | Wittenau |
| RP | 1 | 1 | 2 | Ruhleben |
| | 2 | 2 | 2 | Pankow |
| RR | 1/2 | 1 | 8 | Hermannstraße |
| | | 2 | 8 | Wittenau |
| RS | 1/2 | 1 | 4 | Innsbrucker Platz |
| | | 2 | 4 | Nollendorfplatz |
| RSp | 1/3 | 1 | 7 | **Rudow** |
| | | 3 | | kein Zugverkehr |
| | 2/4 | 2 | 7 | **Ankunft** |
| | | 4 | | kein Zugverkehr |
| Rw | 1/2 | 1 | 7 | Rudow |
| | | 2 | 7 | Rathaus Spandau |
| Rzu | 1/2 | 1 | 9 | **Ankunft** |
| | | 2 | 9 | **Osloer Straße** |
| S | 1 | 1 | 1 | Uhlandstraße |
| | | | 3 | Krumme Lanke |
| | 2 | 2 | 1 | Warschauer Straße |
| | | | 3 | Warschauer Straße |
| Sa | 1/2 | 1 | 5 | Alexanderplatz |
| | | 2 | 5 | Hönow |
| Sch | 1/2 | 1 | 6 | Alt-Mariendorf |
| | | 2 | 6 | Alt-Tegel |
| Scha | 1/2 | 1 | 6 | Alt-Mariendorf |
| | | 2 | 6 | Alt-Tegel |
| Sd | 1/3 | 1 | 2 | Ruhleben |
| | | 3 | 2 | **Ankunft** |
| | | | 2 | **Pankow** |
| | 2 | 2 | 2 | Pankow |
| Se | 1/3 | 1 | 6 | Alt-Mariendorf |
| | | 3 | 6 | **Ankunft** |
| | | | 6 | **Alt-Mariendorf** |
| | 2 | 2 | 6 | Alt-Tegel |
| Sh | 1/2 | 1 | 2 | Ruhleben |
| | | 2 | 2 | Pankow |
| Si | 1/2 | 1 | 5 | Alexanderplatz |
| | | 2 | 5 | Hönow |
| Sie | 1/2 | 1 | 7 | Rudow |
| | | 2 | 7 | Rathaus Spandau |
| SK | 1/2 | 1 | 6 | Alt-Mariendorf |
| | | 2 | 6 | Alt-Tegel |
| Slo | 2/4 | 2 | 9 | Osloer Straße |
| | | 4 | | kein Zugverkehr |
| Slu | 1/3 | 1 | 9 | Rathaus Steglitz |
| | | 3 | | kein Zugverkehr |
| Sno | 1 | 1 | 3 | Krumme Lanke |
| | 2 | 2 | 3 | Warschauer Straße |
| Snu | 1/2 | 1 | 9 | Rathaus Steglitz |
| | | 2 | 9 | Osloer Straße |
| So | 1 | 1 | 2 | Ruhleben |
| | 2 | 2 | 2 | Pankow |
| Sp | 1/2 | 1 | 2 | Ruhleben |
| | | 2 | 2 | Pankow |
| Sr | 1/2 | 1 | 5 | Alexanderplatz |
| | | 2 | 5 | Hönow |
| ST | 1/2 | 1 | 8 | Hermannstraße |
| | | 2 | 8 | Wittenau |
| Sü | 1/2 | 1 | 7 | Rudow |
| | | 2 | 7 | Rathaus Spandau |
| Sz | 1/2 | 1 | 2 | Ruhleben |
| | | 2 | 2 | Pankow |
| T | 1/2 | 1 | 3 | Krumme Lanke |
| | | 2 | 3 | Warschauer Straße |
| Tg | 1/2 | 1 | 6 | **Ankunft** |
| | | | 6 | **Alt-Mariendorf** |
| | | 2 | 6 | **Ankunft** |
| | | | 6 | **Alt-Mariendorf** |
| Th | 1 | 1 | 2 | Ruhleben |
| | | | 2 | **Ankunft** |
| | 2 | 2 | 2 | **Pankow** |
| | | | 2 | Pankow |
| Tk | 1/2 | 1 | 5 | Alexanderplatz |
| | | 2 | 5 | Hönow |

| | | | | |
|---|---|---|---|---|
| Tm | 1/2 | 1 | 9 | Rathaus Steglitz |
| | | 2 | 9 | Osloer Straße |
| Ts | 1/2 | 1 | 6 | Alt-Mariendorf |
| | | 2 | 6 | Alt-Tegel |
| U | 1/2 | 1 | 1 | **Ankunft** |
| | | 2 | 1 | **Warschauer Straße** |
| Ull | 1/2 | 1 | 6 | Alt-Mariendorf |
| | | 2 | 6 | Alt-Tegel |
| V | 1/2 | 1 | 4 | Innsbrucker Platz |
| | | 2 | 4 | Nollendorfplatz |
| VIN | 1/2 | 1 | 2 | Ruhleben |
| | | 2 | 2 | Pankow |
| Vo | 1/2 | 1 | 8 | Hermannstraße |
| | | 2 | 8 | Wittenau |
| W | 1/2 | 1 | 8 | Hermannstraße |
| | | 2 | 8 | Wittenau |
| WA | 1/2 | 1 | 1 | **Ankunft** |
| | | | 1 | **Uhlandstraße** |
| | | | 3 | **Ankunft** |
| | | | 3 | **Krumme Lanke** |
| | | 2 | 1 | **Ankunft** |
| | | | 1 | **Uhlandstraße** |
| | | | 3 | **Ankunft** |
| | | | 3 | **Krumme Lanke** |
| | 3 | 3 | 1 | bei Veranstaltungen |
| Wd | 1/2 | 1 | 7 | Rudow |
| | | 2 | 7 | Rathaus Spandau |
| We | 1/2 | 1 | 6 | Alt-Mariendorf |
| | | 2 | 6 | Alt-Tegel |
| WF | 1/2 | 1 | 9 | Rathaus Steglitz |
| | | 2 | 9 | Osloer Straße |
| Wh | 11/1 | 11 | S5 | Westkreuz |
| | | 1 | 5 | Alexanderplatz |
| | 12/2 | 2 | 5 | Hönow |
| | | 12 | S5 | Strausberg Nord |
| WIU | 1/2 | 1 | 8 | **Hermannstraße** |
| | | 2 | 8 | **Ankunft** |
| Wk | 1/2 | 1 | 7 | Rudow |
| | | 2 | 7 | Rathaus Spandau |
| Wl | 1/2 | 1 | 6 | Alt-Mariendorf |
| | | 2 | 6 | Alt-Tegel |
| WR | 1/2 | 1 | 5 | Alexanderplatz |
| | | 2 | 5 | Hönow |
| Wsg | 1/2 | 1 | 9 | Rathaus Steglitz |
| | | 2 | 9 | Osloer Straße |
| Wt | I | 1 | 1 | Uhlandstraße |
| | | | 3 | Krumme Lanke |
| | | 3 | 2 | Ruhleben |
| | II | 2 | 2 | Pankow |
| | | 4 | 3 | Warschauer Straße |
| | III | 6 | 1 | Warschauer Straße |
| Y | 1/2 | 1 | 7 | Rudow |
| | | 2 | 7 | Rathaus Spandau |
| Zd | 1/2 | 1 | 7 | Rudow |
| | | 2 | 7 | Rathaus Spandau |
| Zi | 1 | 1 | 7 | Rudow |
| | 2 | 2 | 7 | Rathaus Spandau |
| Zo | 1 | 1 | 2 | Ruhleben |
| | 2 | 2 | 2 | Pankow |
| Zu | 1/2 | 1 | 9 | Rathaus Steglitz |
| | | 2 | 9 | Osloer Straße |

| Bahnhof | Kürzel DB | Kürzel S | Kürzel U | Tagesverkehr | Nachtverkehr Fr/Sa + Sa/So | Nachtverkehr sonstige |
|---|---|---|---|---|---|---|
| Adenauerplatz | | | Ad | U7 M19 M29 X10 109 110 310 | U7 M19 M29 N10 | N7 M19 M29 N10 |
| Adlershof | | BADL | | S45 S46 S8 S85 S9 61 63 162 163 164 260 | S46 S8 S9 N60 N65 N68 | N60 N65 N68 |
| Afrikanische Straße | | | Afr | U6 221 | U6 | N6 |
| Ahrensfelde | BAHR | BAF | | RB25 S7 197 390 901 | S7 N97 | N97 |
| Ahrensfelde Friedhof | BAFR | | | RB25 390 901 | | |
| Ahrensfelde Nord | BAFN | | | RB25 | | |
| Albrechtshof | BAS | | | RB10 RB14 237 | | |
| Alexanderplatz | BALE | BALX | A, Al, Ap | RE1 RE2 RE7 RB14 S3 S5 S7 S9 U2 U5 U8 M2 M4 M5 M6 M48 TXL 100 200 248 | S7 S9 U2 U5 U8 N2 M2 M4 M5 M48 N42 N65 | N5 M2 M4 M5 M48 N42 N65 |
| Altstadt Spandau | | | AS | U7 X33 | U7 | N7 |
| Alt-Mariendorf | | | Mf | U6 M76 M77 X76 179 181 277 | U6 M76 M77 N79 | N6 M76 M77 N79 |
| Alt-Reinickendorf | | BARF | ⇒ PB | S25 ⇒ U8 120 122 320 322 | S25 ⇒ U8 N20 | ⇒ N8 N20 |
| Alt-Tegel | | ⇒ BTG | Tg | U6 124 125 133 220 222 ⇒ S25 | U6 N22 N24 N25 N33 ⇒ S25 | N6 N22 N24 N25 N33 |
| Alt-Tempelhof | | | At | U6 M46 140 184 246 | U6 M46 N84 | N6 M46 N84 |
| Altglienicke | | BAGL | | S45 S9 160 ⇒ 363 | S9 | |
| Amrumer Straße | | | Am | U9 142 221 | U9 | N9 |
| Anhalter Bahnhof | | BAHU | | S1 S2 S25 S26 M29 M41 | S1 S2 S25 M29 M41 | M29 M41 |
| Attilastraße | | BATS | | S2 184 282 | S2 N84 | N84 |
| Augsburger Straße | | | Au | U3 | U3 | |
| Babelsberg | | BBAB | | S7 94 99 601 602 616 619 690 693 694 715 750 | S7 N13 N14 N17 | N13 N14 N17 |
| Bad Saarow | BBSP | | | RB36 430 431 | | |
| Bad Saarow Klinikum | BBSK | | | RB36 ⇒ 430 431 | | |
| Basdorf | BBAS | | | RB27 ⇒ 891 | | |
| Baumschulenweg | | BBMW | | S45 S46 S47 S8 S85 S9 170 265 365 | S46 S8 S9 N70 | N70 |
| Bayerischer Platz | | | Bpo, Bpu | U4 U7 ⇒ M46 | U7 ⇒ M46 | N7 ⇒ M46 |
| Beelitz-Heilstätten | BBEL | | | RE7 645 | | |
| Beelitz Stadt | BBZS | | | RB33 ⇒ X43 642 643 644 645 647 | | |
| Bellevue | | BBEV | | S3 S5 S7 S9 | S7 S9 | |
| Bergfelde | | BBFE | | S8 809 | | |
| Berliner Straße | | | Beo, Beu | U7 U9 104 | U7 U9 N42 | N7 N9 N42 |
| Bernau | BBRN | BBER | | DB RE3 RB24 S2 868 869 870 890 891 892 894 895 896 897 898 899 901 907 908 909 | S2 | |
| Bernau-Friedenstal | | BBRF | | S2 ⇒ 868 891 901 | S2 | |
| Bernauer Straße | | | B | U8 M10 247 | U8 M10 | N8 M10 |
| Bestensee | BBST | | | RB24 724 726 | | |
| Betriebsbahnhof Rummelsburg | | BRB | | S3 ⇒ 194 | S3 | |
| Betriebsbahnhof Schöneweide | | BSCF | | S45 S46 S8 S85 S9 | S46 S8 S9 | |
| Beusselstraße | | BBEU | | S41 S42 S46 TXL 106 123 | S41 S42 N26 | N26 |
| Biesdorf | | BBDF | | S5 192 | S5 | |
| Biesdorf-Süd | | | Bü | U5 | U5 | |
| Biesenthal | WBT | | | RB24 907 909 913 | | |
| Birkengrund | BBGN | | | RE4 701 710 720 | | |
| Birkenstein | | BBIS | | S5 941 | S5 | |
| Birkenstraße | | | Bi | U9 ⇒ M27 | U9 ⇒ M27 | N9 ⇒ M27 |
| Birkenwerder | BBI | BBIW | | RB20 S1 S8 | S1 | |
| Bismarckstraße | | | Bmo, Bmu | U2 U7 ⇒ 109 | U2 U7 | N2 N7 |
| Blankenburg | | BBLB | | S2 S8 150 154 | S2 | |
| Blankenfelde | BBF | BBFD | | RE5 RE7 S2 704 713 720 792 793 794 797 | S2 | |
| Blaschkoallee | | | Bl | U7 170 ⇒ 171 | U7 | ⇒ N7 |
| Blissestraße | | | Bli | U7 101 104 249 310 | U7 N42 | N7 N42 |
| Blumberg | BBLU | | | RB25 895 899 901 | | |
| Blumberg-Rehhahn | BAHH | | | RB25 | | |
| Boddinstraße | | | Bo | U8 104 166 | U8 | N8 |
| Borgsdorf | | BBOR | | S1 816 | S1 | |
| Bornholmer Straße | | BBOS | | S1 S2 S25 S26 S8 S85 M13 50 | S1 S2 S25 S8 M13 | M13 |
| Borsigwerke | | | Bk | U6 133 | U6 | N6 |
| Botanischer Garten | | BBGT | | S1 188 ⇒ M48 | S1 N88 ⇒ M48 | N88 ⇒ M48 |
| Brandenburger Tor | | BTOR | BRT | S1 S2 S25 S26 U55 TXL 100 ⇒ 200 | S1 S2 S25 | ⇒ N2 |
| Breitenbachplatz | | | Bt | U8 101 248 282 | U3 | N3 |
| Brieselang | BBRI | | | RB10 RB14 649 656 657 667 | | |
| Britz-Süd | | | Br | U7 M46 181 | U7 M46 | M46 ⇒ N7 |
| Buch | | BBU | | S2 150 158 259 353 893 | S2 N58 | N58 |
| Buckower Chaussee | | BBCH | | S2 M11 X11 277 710 711 | S2 M11 | M11 |
| Bülowstraße | | | Bs ⇒ Kus | U2 M19 M48 M85 106 187 ⇒ U1 U3 | U2 N2 M19 M48 ⇒ U1 | N1 N2 M19 M48 |
| Bundesplatz | | BBUP | Bu | S41 S42 S46 U9 248 | S41 S42 U9 | N9 |
| Bundestag | | | BUN | U55 ⇒ 100 | | |
| Caputh-Geltow | BCAP | | | RB23 | | |
| Caputh Schwielowsee | BSIS | | | RB23 607 | | |
| Charlottenburg | BCHB | BCHS | ⇒ Wd | RE1 RE7 RB14 RB21 RB22 S3 S5 S7 S9 X49 109 309 310 ⇒ U7 M49 X34 | S7 S9 ⇒ U7 M49 | N7 ⇒ M49 |
| Charlottenhof | BPDC | | | RE1 RB20 RB21 RE22 RB23 91 94 98 X5 580 605 606 610 631 | 631 N14 | N14 |
| Cottbusser Platz | | | C | U5 195 | U5 | N5 |
| Dabendorf | BDAB | | | RE5 RE7 716 789 791 ⇒ 701 714 | | |
| Dahlem-Dorf | | | Dd | U3 M11 X83 ⇒ 110 | U3 M11 ⇒ N10 | N3 M11 ⇒ N10 |
| Dahlewitz | BDT | | | RE5 RE7 713 792 | | |
| Dallgow-Döberitz | BDL | | | RE4 RB13 653 655 663 670 | | |
| Deutsche Oper | | | Obi | U2 ⇒ 101 | U2 | N2 |
| Eberswalder Straße | | | EB | U2 M1 M10 12 | U2 M1 M10 | N2 M1 M10 |
| Eichborndamm | | BEBD | | S25 221 322 | S25 | |
| Eichwalde | | BEIW | | S46 S8 731 738 | S46 | |
| Eisenacher Straße | | | Ei | U7 ⇒ M46 | U7 ⇒ M46 | N7 ⇒ M46 |
| Elsterwerdaer Platz | | | E | U5 X69 108 154 169 190 398 | U5 N69 | N69 |
| Erkner | BERK | BE | | RE1 S3 161 418 420 424 428 429 436 950 | S3 | |
| Ernst-Reuter-Platz | | | RP | U2 M45 X9 245 | U2 M45 | N2 M45 |
| Falkensee | BFKS | | | RE2 RE6 RB10 RB14 337 604 651 652 653 654 655 656 | | |
| Fehrbelliner Platz | | | Fpo, Fpu | U3 U7 101 104 115 | U3 U7 N42 | N3 N7 N42 |
| Feuerbachstraße | | BFB | | S1 M76 X76 181 | S1 M76 N81 | M76 N81 |

| Bahnhof | Kürzel DB | Kürzel S | Kürzel U | Tagesverkehr | Nachtverkehr Fr/Sa + Sa/So | Nachtverkehr sonstige |
|---|---|---|---|---|---|---|
| Flughafen Schönefeld ✈ | BFHS | BFLH | | RE7 RB14 RB22 S45 S9 163 164 171 734 735 736 738 741 742 | S9 N7 N60 | N7 N60 |
| Frankfurter Allee | | BFA | Ff | S41 S42 S8 S85 U5 M13 16 | S41 S42 S8 U5 M13 | N5 M13 |
| Frankfurter Tor | | | Ft | U5 M10 21 | U5 M10 | N5 M10 |
| Franz-Neumann-Platz (Am Schäfersee) | | | FN | U8 128 250 327 | U8 | N8 |
| Französische Straße | | | Fr | U6 147 | U6 | |
| Fredersdorf | | BFD | | S5 933 948 949 951 | S5 | |
| Freie Universität (Thielplatz) | | | T | U3 110 | U3 | N3 |
| Friedenau | | BFRU | | S1 187 | S1 | |
| Friedrichsfelde | | | Fi | U5 194 296 396 | U5 N50 | N50 |
| Friedrichsfelde Ost | | BFFO | | S5 S7 S75 M17 27 37 192 194 | S5 S7 S75 M17 | M17 |
| Friedrichshagen | | BFRH | | S3 60 61 88 | S3 N61 N67 | N61 N67 |
| Friedrichstraße | BFRI | BFST, BFSTT | F | RE1 RE2 RE7 RB14 RB21 RB22 S1 S2 S25 S26 S3 S5 S7 S9<br>U6 M1 12 147 | S1 S2 S25 U6 S7 S9 M1 | N6 M1 |
| Friedrich-Wilhelm-Platz | | | Fw | U9 M76 181 186 246 | U9 N81 | N9 N81 |
| Frohnau | | BFOH | | S1 125 220 | S1 N20 | N20 |
| Gartenfeld [außer Betrieb] | | BGTF | | ⇒ X33 133 | ⇒ N33 | ⇒ N33 |
| Gehrenseestraße | | BGSE | | S75 294 | S75 N56 | N56 |
| Gesundbrunnen | BGS | BGB | Gb | RE1 RB3 RB5 RB6 S1 S2 S25 S26 S41 S42 S46 U8 247 | S1 S2 S25 S41 S42 U8 | N8 |
| Gleisdreieck | | | Go, Gu | U1 U2 U3 | U1 U2 | |
| Gneisenaustraße | | | Gs | U7 140 248 | U7 | N7 |
| Görlitzer Bahnhof | | | Gr | U1 U3 M29 | U1 M29 | N1 M29 |
| Greifswalder Straße | | BGSS | | S41 S42 S8 S85 M4 | S41 S42 S8 M4 | M4 |
| Grenzallee | | | Gz | U7 171 | U7 | N7 |
| Griebnitzsee | BGBS | BGRI | | RB21 RB22 S7 616 694 696 | S7 N17 | N17 |
| Grünau | | BGAS | | S46 S8 S85 68 163 263 363 | S46 S8 N62 N68 | N62 N68 |
| Grünbergallee | | BGBA | | S45 S9 ⇒ 160 163 | S9 | |
| Grunewald | | BGWD | | S7 M19 186 349 | S7 | |
| Güntzelstraße | | | Gt | U9 | U9 | N9 |
| Hackescher Markt | | BHKM | | S3 S5 S7 S9 M1 M4 M5 M6 | S7 S9 M1 M4 M5 N40 N42 N65 | N2 N5 N8 N40 N42 N65 |
| Halemweg | | | Hl | U7 123 | U7 | ⇒ N7 |
| Halensee | | BHAL | | S41 S42 S46 M19 M29 X10 104 | S41 S42 M19 M29 N42 | M19 M29 N42 |
| Hallesches Tor | | | Ho, Hu | U1 U3 U6 M41 248 | U1 U6 M41 N42 | N1 N42 ⇒ N6 |
| Hansaplatz | | | Ha | U9 106 | U9 N26 | N26 ⇒ N9 |
| Haselhorst | | | Hs | U7 X33 X36 133 236 | U7 N33 | N7 N33 |
| Hauptbahnhof | BLS, BL | BHBF | HBF | RE1 RE2 RB3 RB4 RB5 RB7 RB10 RB14 RB21 RB22 S3 S5 S7 S9<br>U55 M5 M8 M10 M41 M85 TXL 120 123 142 147 245 | S7 S9 M10 M41 N20 N40 | M10 M41 N20 N40 |
| Hausvogteiplatz | | | Hv | U2 ⇒ M48 147 265 | U2 ⇒ M48 | ⇒ M48 |
| Heerstraße | | BHST | | S3 S9 M49 X34 X49 218 349 | S9 M49 | M49 |
| Hegermühle | | BHGM | | S5 ⇒ 89 885 923 926 927 929 931 937 955 966 | S5 | |
| Heidelberger Platz | | BHEI | Hb | S41 S42 S46 U3 249 310 | S41 S42 U3 | N3 |
| Heiligensee | | BHLS | | S25 124 | S25 N24 | N24 |
| Heinrich-Heine-Straße | | | He ⇒ Mk | U8 165 265 ⇒ U2 147 | U8 N65 ⇒ U2 | N8 N65 |
| Hellersdorf | | | Hd | U5 M6 18 X54 195 | U5 M6 | N5 M6 |
| Hennigsdorf | BHND | BHD | | RE6 RB20 RB55 S25 136 651 807 808 809 811 824 ⇒ 814 | S25 | |
| Hermannplatz | | | Hpo, Hpu | U7 U8 M29 M41 171 194 | U7 U8 M29 M41 N94 | N7 N8 M29 M41 N94 |
| Hermannstraße | | BHER | HMS | S41 S42 S46 S46 S47 U8 M44 246 277 370 377 | S41 S42 S46 U8 M44 N79 | N8 M44 N79 |
| Hermsdorf | | BHED | | S1 326 806 809 | S1 N25 | N25 |
| Hirschgarten | | BHI | | S3 ⇒ 60 | S3 ⇒ N60 N67 | ⇒ N60 N67 |
| Hohen Neuendorf | | BHN | | S1 S8 809 822 | S1 | |
| Hohenschönhausen | BHSH | BHH | | RB12 RB24 S75 M4 M17 X54 154 197 256 893 | S75 M4 N56 | M4 N56 |
| Hohenzollerndamm | | BHO | | S41 S42 S46 115 | S41 S42 N10 | N3 N10 |
| Hohenzollernplatz | | | Hz | U3 249 | U3 | N3 |
| Holzhauser Straße | | | Hh | U6 X33 133 | U6 N33 | N6 N33 |
| Hönow | | | Hö | U5 395 941 943 | U5 | N5 |
| Hoppegarten | | BHPN | | S5 940 942 943 944 945 | S5 | |
| Humboldthain | | BHUM | | S1 S2 S25 S26 247 ⇒ M27 | S1 S2 S26 ⇒ M27 | ⇒ M27 |
| Innsbrucker Platz (Hauptstraße) | | BIP | Ip | S41 S42 S46 U4 M48 M85 187 248 | S41 S42 M48 | M48 |
| Jakob-Kaiser-Platz | | | JK | U7 M21 X9 X21 109 123 | U7 M21 | N7 M21 |
| Jannowitzbrücke | | BJB | Jn | S3 S5 S7 S9 U8 248 | S7 S9 U8 N40 N65 | N8 N40 N65 |
| Johannisthaler Chaussee (Gropiusstadt) | | | Jt | U7 M11 X11 172 744 | U7 M11 | M11 ⇒ N7 |
| Julius-Leber-Brücke | | BJLB | | S1 104 106 204 ⇒ M48 M85 187 | S1 N42 ⇒ M48 | N42 ⇒ M48 |
| Jungfernheide | BJUF | BJUN | Jho, Jhu | RB4 RB6 RB10 RB13 S41 S42 S46 U7 M21 M27 X9 109 | S41 S42 U7 M21 M27 | N7 M21 M27 |
| Kaiserdamm | | ⇒ BMN | Kd | U2 139 ⇒ S41 S42 S46 M49 X34 X49 218 | U2 ⇒ S41 S42 M49 | N2 ⇒ M49 |
| Kaiserin-Augusta-Straße | | | Ka | U6 184 | U6 | N6 |
| Karl-Bonhoeffer-Nervenklinik | | BKBO | KB | S25 U8 M21 X21 ⇒ 322 | S25 U8 M21 | N8 M21 |
| Karl-Marx-Straße | | | KM | U7 | U7 | N7 |
| Karlshorst | BKH | BKLH | | S3 M17 27 37 296 396 | S3 M17 | M17 |
| Karow | BKAR | BKRW | | RB27 S2 350 | S2 | |
| Kaulsdorf | | BKAD | | S5 197 269 399 | S5 N95 | N95 |
| Kaulsdorf-Nord | | | KL | U5 191 197 269 291 | U5 N91 | N5 N91 |
| Kienberg (Gärten der Welt) | | | GK | U5 197 | U5 | N5 |
| Kleistpark | | | Kt | U7 M48 M85 106 187 204 | U7 M48 | N7 M48 |
| Klosterstraße | | | Ko | U2 ⇒ M48 248 | U2 ⇒ M48 N40 N42 | ⇒ N8 M48 N40 N42 |
| Kochstraße (Checkpoint Charlie) | | | Ks | U6 M29 | U6 M29 | N6 M29 |
| Köllnische Heide | | BKHD | | S45 S46 S47 M41 341 ⇒ 377 | S46 M41 ⇒ N79 | M41 ⇒ N79 |
| Königs Wusterhausen | BKW | BKW | | RE2 RB22 RB24 S46 721 722 723 724 727 728 729 730 733 735 736 737 739 790 | S46 | |
| Konstanzer Straße | | | Kn | U7 101 | U7 | N7 |
| Köpenick | | BKPK | | S3 62 63 68 X69 164 169 269 | S3 N69 N90 | N69 N90 |
| Kottbusser Tor | | | Kbo, Kbu | U1 U3 U8 140 | U1 U8 | N1 N8 |
| Krumme Lanke | | ⇒ BMEX | K | U3 X11 118 622 ⇒ S1 | U3 ⇒ S1 | N3 |
| Kurfürstendamm | | | Kfo, Kfu | U1 U9 M19 M29 M46 X10 109 110 204 249 | U1 U9 N2 M19 M29 M46 N10 N26 | N1 N2 N3 N9 M19 M29 M46 N10 N26 |
| Kurfürstenstraße | | | Kus ⇒ Bs | U1 U3 M48 M85 ⇒ U2 M19 | U1 N2 M48 ⇒ U2 M19 | N1 N2 M48 ⇒ M19 |
| Kurt-Schumacher-Platz | | | Sch | U6 M21 X21 122 125 128 221 | U6 M21 | N6 M21 |
| Landsberger Allee | | BLST | | S41 S42 S8 S85 M5 M6 M8 156 | S41 S42 S8 M5 M6 M8 | M5 M6 M8 |
| Lankwitz | | BLAK | | S25 S26 M82 X83 181 187 283 284 ⇒ 184 284 | S25 M82 N81 ⇒ N84 | M82 N81 ⇒ N84 |

| Bahnhof | Kürzel DB | Kürzel S | Kürzel U | Tagesverkehr | Nachtverkehr Fr/Sa + Sa/So | Nachtverkehr sonstige |
|---|---|---|---|---|---|---|
| Lehnitz | | BLEN | | S1 | S1 | |
| Leinestraße | | | L | U8 | U8 | N8 |
| Leopoldplatz | | | Lpo, Lpu | U6 U9 Bus 120 142 221 247 327 | U6 U9 Bus N20 | N6 N9 Bus N20 |
| Lichtenberg | BLO | BLI | Li | DB RB12 RB24 RB25 RB26 S5 S7 S75 U5 Tram 21 37 Bus 108 240 256 296 | S5 S7 S75 U5 Bus N50 N94 | Bus N50 N94 ⇒ N6 |
| Lichtenrade | | BLRD | | S2 M M76 Bus 172 175 275 | S2 M M76 | M M76 |
| Lichterfelde Ost | BLIH | BLIO | | RE3 RB24 RE5 S25 S26 M M11 X X11 Bus 184 284 ⇒ Bus 380 | S25 M M11 Bus N84 | M M11 Bus N84 |
| Lichterfelde Süd | | BLIS | | S25 S26 M M85 Bus 186 284 | S25 M M85 Bus N88 | M M85 Bus N88 |
| Lichterfelde West | | BLWE | | S1 M M11 ⇒ M M48 Bus 101 188 | S1 M M11 ⇒ M M48 Bus N88 | M M11 ⇒ M M48 Bus N88 |
| Lindauer Allee | | | LD | U8 Bus 322 ⇒ M M21 | U8 ⇒ M M21 | N8 ⇒ M M21 |
| Lipschitzallee | | | La | U7 Bus 373 ⇒ M M11 Bus 172 | U7 ⇒ M M11 | ⇒ M M11 |
| Louis-Lewin-Straße | | | LL | U5 Bus 195 | U5 | N5 |
| Magdalenenstraße | | | Md | U5 Bus 240 | U5 Bus N50 N56 N94 | N5 Bus N50 N56 N94 |
| Mahlow | | BMAH | | S2 Bus 600 742 794 797 | S2 | |
| Mahlsdorf | BMHL | BMDF | | RB26 S5 Tram 62 Bus 195 197 395 398 ⇒ Bus 399 | S5 Bus N90 N95 | Bus N90 N95 |
| Marienfelde | | BMF | | S2 M M77 Bus 283 ⇒ Bus 277 | S2 M M77 Bus N81 | M M77 Bus N81 |
| Märkisches Museum | | | Mk ⇒ He | U2 Bus 147 165 265 ⇒ U8 M M48 Bus 248 | U2 ⇒ U8 M M48 Bus N42 N65 | ⇒ N8 M M48 Bus N42 N65 |
| Marzahn | | BMAZ | | S7 M M6 Tram 16 X X54 Bus 191 192 195 291 | S7 M M6 | M M6 |
| Mehringdamm | | | Me | U6 U7 M M19 Bus 140 | U6 U7 M M19 Bus N42 | N6 N7 M M19 Bus N42 |
| Mehrower Allee | | BMEA | | S7 X X69 Bus 197 | S7 | |
| Mendelssohn-Bartholdy-Park | | | MB | U2 M M29 | U2 M M29 | N1 M M29 |
| Messe Nord/ICC | | BMN | ⇒ Kd | S41 S42 S46 M M49 X X34 X49 Bus 139 218 ⇒ U2 | S41 S42 M M49 ⇒ U2 | M M49 ⇒ N2 |
| Messe Süd | | BMS | | S8 S9 Bus 349 | S9 | |
| Mexikoplatz | | BMEX | ⇒ K | S1 Bus 118 622 ⇒ U3 X X11 | S1 ⇒ U3 | N3 |
| Mierendorffplatz | | | Mp | U7 M M27 ⇒ X X9 | U7 M M27 | N7 M M27 |
| Möckernbrücke | | | Mo, Mu | U1 U3 U7 | U1 U7 | N1 |
| Mohrenstraße | | | MH | U2 Bus 200 | U2 N2 | N2 |
| Moritzplatz | | | Mr | U8 M M29 ⇒ Bus 140 | U8 M M29 | N8 M M29 |
| Mühlenbeck-Mönchmühle | | BMM | | S8 Bus 806 810 | | |
| Museumsinsel [in Bau] | | | MIN | X TXL Bus 100 200 | N2 | N2 |
| Naturkundemuseum | | | NA | U6 M M5 M8 M10 Tram 12 | U6 M M10 Bus N40 | N6 M M10 Bus N40 |

| Linie | Fahrtweg | Takt |
|---|---|---|
| M M1 | BPKW $\overset{3}{\leftrightarrow}$ VIN $\overset{4}{\leftrightarrow}$ BSAL $\overset{4}{\leftrightarrow}$ EB $\overset{5}{\leftrightarrow}$ Ro $\overset{2}{\leftrightarrow}$ BHKM $\overset{3}{\leftrightarrow}$ BORS $\overset{3}{\leftrightarrow}$ Ob $\overset{2}{\leftrightarrow}$ BFST | t: 7,5-10, f/a: 20, n: 30 |
| M M2 | BPLA $\overset{12}{\leftrightarrow}$ BALX | t: 5-7, f/a: 10, n: 30 |
| M M4 | BHH $\overset{18}{\leftrightarrow}$ BGSS $\overset{12}{\leftrightarrow}$ BALX $\overset{3}{\leftrightarrow}$ BHKM | t: 3-10, f/a: 20, n: 30 |
| M M5 | BLST $\overset{13}{\leftrightarrow}$ BALX $\overset{3}{\leftrightarrow}$ BHKM $\overset{3}{\leftrightarrow}$ BORS $\overset{2}{\leftrightarrow}$ Ob $\overset{3}{\leftrightarrow}$ NA $\overset{5}{\leftrightarrow}$ BHBF | t: 5-20, f/a: 10-20, n: 30 |
| M M6 | Hd $\overset{18}{\leftrightarrow}$ BMAZ $\overset{18}{\leftrightarrow}$ BLST $\overset{13}{\leftrightarrow}$ BALX $\overset{3}{\leftrightarrow}$ BHKM | t: 10, f/a: 15-20, n: 30 |
| M M8 | BSPH $\overset{15}{\leftrightarrow}$ BLST $\overset{11}{\leftrightarrow}$ Lu $\overset{2}{\leftrightarrow}$ Ro $\overset{5}{\leftrightarrow}$ BNB $\overset{3}{\leftrightarrow}$ NA $\overset{4}{\leftrightarrow}$ BHBF | t: 5-10, f/a: 20, n: 30 |
| M M10 | BHBF $\overset{5}{\leftrightarrow}$ NA $\overset{2}{\leftrightarrow}$ BNB $\overset{3}{\leftrightarrow}$ B $\overset{5}{\leftrightarrow}$ EB $\overset{16}{\leftrightarrow}$ Ft $\overset{5}{\leftrightarrow}$ BWRS | t: 5, f/a: 10-15, n: 30 |
| M M13 | Se $\overset{5}{\leftrightarrow}$ Olo $\overset{5}{\leftrightarrow}$ BBOS $\overset{33}{\leftrightarrow}$ BFA $\overset{10}{\leftrightarrow}$ BWRS | t: 10, f/a: 20, n: 30 |
| M M17 | BHH $\overset{18}{\leftrightarrow}$ BFFO $\overset{6}{\leftrightarrow}$ Tk $\overset{5}{\leftrightarrow}$ BKLH $\overset{11}{\leftrightarrow}$ BSW | t: 10, f/a: 20, n: 30 |
| Tram 12 | EB $\overset{8}{\leftrightarrow}$ BNB $\overset{3}{\leftrightarrow}$ NA $\overset{3}{\leftrightarrow}$ Ob $\overset{2}{\leftrightarrow}$ BFST | t: 10, f/a: 20 |
| Tram 16 | BMAZ $\overset{23}{\leftrightarrow}$ BFA | t: 10, f/a: 20, So: – |
| Tram 18 | Hd $\overset{20}{\leftrightarrow}$ BSPH | H: 10, N: 20, So: – |
| Tram 21 | BLI $\overset{22}{\leftrightarrow}$ Ft $\overset{9}{\leftrightarrow}$ BRH $\overset{19}{\leftrightarrow}$ BSW | t/f/a: 20 |
| Tram 27 | BFFO $\overset{6}{\leftrightarrow}$ Tk $\overset{5}{\leftrightarrow}$ BKLH | t/f/a: 20 |
| Tram 37 | BLI $\overset{11}{\leftrightarrow}$ BFFO $\overset{6}{\leftrightarrow}$ Tk $\overset{5}{\leftrightarrow}$ BKLH $\overset{11}{\leftrightarrow}$ BSW | t: 20, Sa/So: – |

| Linie | Fahrtweg | Takt |
|---|---|---|
| Tram 50 | BPDH $\overset{7}{\leftrightarrow}$ BPKW $\overset{3}{\leftrightarrow}$ VIN $\overset{7}{\leftrightarrow}$ BBOS $\overset{5}{\leftrightarrow}$ Olo $\overset{5}{\leftrightarrow}$ Se | t: 10, f/a: 20 |
| Tram 60 | BSW $\overset{28}{\leftrightarrow}$ BFRH | t: 20 |
| Tram 61 | BADL $\overset{6}{\leftrightarrow}$ BSPF $\overset{24}{\leftrightarrow}$ BFRH | t: 20 |
| Tram 62 | BKPK $\overset{20}{\leftrightarrow}$ BMDF | t: 20 |
| Tram 63 | BADL $\overset{6}{\leftrightarrow}$ BSPF $\overset{13}{\leftrightarrow}$ BKPK | t: 20 |
| Tram 68 | BKPK $\overset{19}{\leftrightarrow}$ BGAS | t: 20 |
| M M11 | Dd $\overset{7}{\leftrightarrow}$ BLWE $\overset{10}{\leftrightarrow}$ BLIO $\overset{15}{\leftrightarrow}$ BBCH $\overset{15}{\leftrightarrow}$ Jt $\overset{22}{\leftrightarrow}$ BSW | t: 10, f/a: 20, n: 30 |
| M M19 | BGWD $\overset{9}{\leftrightarrow}$ BHAL $\overset{4}{\leftrightarrow}$ Ad $\overset{6}{\leftrightarrow}$ U $\overset{2}{\leftrightarrow}$ Kfo $\overset{4}{\leftrightarrow}$ Wt $\overset{2}{\leftrightarrow}$ Nm $\overset{2}{\leftrightarrow}$ BS $\overset{4}{\leftrightarrow}$ BGGS $\overset{1}{\leftrightarrow}$ BYOR $\overset{3}{\leftrightarrow}$ Me | t: 10, f/a: 20, n: 30 |
| M M21 | BWIN $\overset{8}{\leftrightarrow}$ BKBO $\overset{5}{\leftrightarrow}$ Sch $\overset{9}{\leftrightarrow}$ JK $\overset{4}{\leftrightarrow}$ BJUN | t: 10, f/a: 20, n: 30 |
| M M27 | BPKW $\overset{6}{\leftrightarrow}$ BWOK $\overset{6}{\leftrightarrow}$ Pk $\overset{5}{\leftrightarrow}$ BWED $\overset{1}{\leftrightarrow}$ Ri $\overset{12}{\leftrightarrow}$ Tm $\overset{11}{\leftrightarrow}$ Mp $\overset{4}{\leftrightarrow}$ BJUN | t: 6-7, f/a: 10-20, n: 30 |
| M M29 | BHAL $\overset{4}{\leftrightarrow}$ Ad $\overset{6}{\leftrightarrow}$ U $\overset{2}{\leftrightarrow}$ Kfo $\overset{4}{\leftrightarrow}$ Wt $\overset{8}{\leftrightarrow}$ MB $\overset{3}{\leftrightarrow}$ BAHU $\overset{4}{\leftrightarrow}$ Ks $\overset{5}{\leftrightarrow}$ Mr $\overset{7}{\leftrightarrow}$ Gr $\overset{10}{\leftrightarrow}$ Hpo | t: 5-10, f/a: 10-20, n: 30 |
| M M32 | BSPA $\overset{15}{\leftrightarrow}$ BSTA | t: 5-7, f/a: 10-20, n: 30 |
| M M41 | BKHD $\overset{4}{\leftrightarrow}$ BSO $\overset{10}{\leftrightarrow}$ Hpo $\overset{11}{\leftrightarrow}$ Ho $\overset{4}{\leftrightarrow}$ BAHU $\overset{2}{\leftrightarrow}$ BPOP $\overset{7}{\leftrightarrow}$ BHBF | t: 4-10, f/a: 20, n: 30 |
| M M45 | BSPA $\overset{11}{\leftrightarrow}$ Rl $\overset{10}{\leftrightarrow}$ BWES $\overset{7}{\leftrightarrow}$ Rw $\overset{5}{\leftrightarrow}$ RP $\overset{4}{\leftrightarrow}$ BZOS | t: 6-10, f/a: 20, n: 30 |
| M M46 | BZOS $\overset{3}{\leftrightarrow}$ Kfo $\overset{4}{\leftrightarrow}$ Wt $\overset{11}{\leftrightarrow}$ BSGR $\overset{4}{\leftrightarrow}$ BSKR $\overset{9}{\leftrightarrow}$ At $\overset{16}{\leftrightarrow}$ Pi $\overset{8}{\leftrightarrow}$ Br | t: 5-10, f/a: 20, n: 30 |

| Linie | Fahrtweg | Takt |
|---|---|---|
| M M48 | BRST $\overset{4}{\leftrightarrow}$ Slo $\overset{2}{\leftrightarrow}$ Wsg $\overset{5}{\leftrightarrow}$ BIP $\overset{7}{\leftrightarrow}$ Kt $\overset{3}{\leftrightarrow}$ BS $\overset{1}{\leftrightarrow}$ Kus $\overset{8}{\leftrightarrow}$ BPOP $\overset{4}{\leftrightarrow}$ Mi $\overset{2}{\leftrightarrow}$ Sp $\overset{7}{\leftrightarrow}$ BALX | t: 10, f/a: 20, n: 30 |
| M M49 | BHST $\overset{3}{\leftrightarrow}$ Th $\overset{4}{\leftrightarrow}$ BMN $\overset{6}{\leftrightarrow}$ Wd $\overset{7}{\leftrightarrow}$ BZOS | t: 10, f/a: 20, n: 30 |
| M M76 | Wsg $\overset{2}{\leftrightarrow}$ BFB $\overset{6}{\leftrightarrow}$ BPRI $\overset{11}{\leftrightarrow}$ Mf $\overset{22}{\leftrightarrow}$ BLRD | t: 5-10, f/a: 20, n: 30 |
| M M77 | Mf $\overset{8}{\leftrightarrow}$ BMF | t: 10, f/a: 20, n: 30 |
| M M82 | BRST $\overset{10}{\leftrightarrow}$ BLAK | t: 6-10, f/a: 20, n: 30 |
| M M85 | BLIS $\overset{24}{\leftrightarrow}$ BRST $\overset{4}{\leftrightarrow}$ Slo $\overset{2}{\leftrightarrow}$ Wsg $\overset{5}{\leftrightarrow}$ BIP $\overset{7}{\leftrightarrow}$ Kt $\overset{3}{\leftrightarrow}$ BS $\overset{1}{\leftrightarrow}$ Kus $\overset{8}{\leftrightarrow}$ BPOP $\overset{6}{\leftrightarrow}$ BHBF | t: 10, f/a: 20, n: 30 |
| X TXL | TXL $\overset{8}{\leftrightarrow}$ BBEU $\overset{6}{\leftrightarrow}$ Tm $\overset{6}{\leftrightarrow}$ BHBF $\overset{9}{\leftrightarrow}$ BTOR $\overset{2}{\leftrightarrow}$ ULO $\overset{2}{\leftrightarrow}$ MIN $\overset{4}{\leftrightarrow}$ BALX | t: 6, f/a: 10 |
| X X7 | R $\overset{7}{\leftrightarrow}$ SXF | t: 10, f/a: 20 |
| X X9 | TXL $\overset{4}{\leftrightarrow}$ JK $\overset{4}{\leftrightarrow}$ BJUN $\overset{8}{\leftrightarrow}$ RP $\overset{4}{\leftrightarrow}$ BZOS | t: 10, a: 20 |
| X X10 | BZOS $\overset{3}{\leftrightarrow}$ Kfo $\overset{1}{\leftrightarrow}$ U $\overset{5}{\leftrightarrow}$ Ad $\overset{3}{\leftrightarrow}$ BHAL $\overset{12}{\leftrightarrow}$ Os $\overset{7}{\leftrightarrow}$ BZD ($\overset{12}{\leftrightarrow}$ BTLS, nur zur HVZ) | t: 10-20, f/a: 20 |
| X X11 | K $\overset{10}{\leftrightarrow}$ BSDG $\overset{14}{\leftrightarrow}$ BLIO $\overset{12}{\leftrightarrow}$ BBCH $\overset{12}{\leftrightarrow}$ Jt $\overset{15}{\leftrightarrow}$ BSW | t: 10-20, f/a: 20 |
| X X21 | BWIN $\overset{6}{\leftrightarrow}$ BKBO $\overset{4}{\leftrightarrow}$ Sch $\overset{8}{\leftrightarrow}$ JK | t: 10, f/a: 20 |
| X X33 | BSPA $\overset{2}{\leftrightarrow}$ AS $\overset{3}{\leftrightarrow}$ Zi $\overset{2}{\leftrightarrow}$ Hs $\overset{17}{\leftrightarrow}$ Hh $\overset{8}{\leftrightarrow}$ RR $\overset{3}{\leftrightarrow}$ BWIN | t: 6-10, f/a: 20 |
| X X34 | BHST $\overset{2}{\leftrightarrow}$ Th $\overset{3}{\leftrightarrow}$ BMN $\overset{5}{\leftrightarrow}$ Wd $\overset{7}{\leftrightarrow}$ BZOS | t: 10, f/a: 20 |
| X X36 | BSPA $\overset{18}{\leftrightarrow}$ Hs | t: 10, Sa-So: – |

| Linie | Fahrtweg | Takt |
|---|---|---|
| X X49 | BHST $\overset{2}{\leftrightarrow}$ Th $\overset{3}{\leftrightarrow}$ BMN $\overset{4}{\leftrightarrow}$ BCHS | H: 10-20, So: – |
| X X54 | BPKW $\overset{25}{\leftrightarrow}$ BHH $\overset{9}{\leftrightarrow}$ BRWA $\overset{4}{\leftrightarrow}$ BMAZ ($\overset{14}{\leftrightarrow}$ Hd, nur Mo-Sa) | t: 10-20, f/a: 20 |
| X X69 | BMEA $\overset{18}{\leftrightarrow}$ E $\overset{13}{\leftrightarrow}$ BKPK | t: 20 |
| X X76 | Wsg $\overset{2}{\leftrightarrow}$ BFB $\overset{4}{\leftrightarrow}$ BPRI $\overset{11}{\leftrightarrow}$ Mf | t: 20, So: – |
| X X83 | Dd $\overset{8}{\leftrightarrow}$ BRST $\overset{8}{\leftrightarrow}$ BLAK $\overset{19}{\leftrightarrow}$ BSC | t: 5-10, f/a: 20 |
| Bus 100 | BZOS $\overset{17}{\leftrightarrow}$ BTOR $\overset{2}{\leftrightarrow}$ ULO $\overset{2}{\leftrightarrow}$ MIN $\overset{5}{\leftrightarrow}$ BALX | t: 5-10, f/a: 20 |
| Bus 101 | Tm $\overset{23}{\leftrightarrow}$ Kn $\overset{2}{\leftrightarrow}$ Fpo $\overset{2}{\leftrightarrow}$ Bli $\overset{8}{\leftrightarrow}$ Bt $\overset{16}{\leftrightarrow}$ BZD | t: 10-20, f/a: 20 |
| Bus 104 | Nd $\overset{4}{\leftrightarrow}$ Th $\overset{7}{\leftrightarrow}$ BHAL $\overset{8}{\leftrightarrow}$ Fpo $\overset{2}{\leftrightarrow}$ Bli $\overset{3}{\leftrightarrow}$ Beo $\overset{11}{\leftrightarrow}$ BJLB $\overset{16}{\leftrightarrow}$ PL $\overset{8}{\leftrightarrow}$ Bo $\overset{6}{\leftrightarrow}$ Rk $\overset{11}{\leftrightarrow}$ BTP | t: 5-20, f/a: 20 |
| Bus 106 | Se $\overset{11}{\leftrightarrow}$ BBEU $\overset{10}{\leftrightarrow}$ Ha $\overset{9}{\leftrightarrow}$ Nm $\overset{2}{\leftrightarrow}$ BS $\overset{3}{\leftrightarrow}$ Kt $\overset{3}{\leftrightarrow}$ BJLB $\overset{5}{\leftrightarrow}$ BSKR | t: 20, f/a: 20 |
| Bus 108 | BLI $\overset{14}{\leftrightarrow}$ E | t: 10-20, f/a: 20 |
| Bus 109 | TXL $\overset{5}{\leftrightarrow}$ JK $\overset{2}{\leftrightarrow}$ BJUN $\overset{11}{\leftrightarrow}$ BCHS $\overset{2}{\leftrightarrow}$ Ad $\overset{5}{\leftrightarrow}$ U $\overset{2}{\leftrightarrow}$ Kfo $\overset{2}{\leftrightarrow}$ BZOS | t: 10, f/a: 20 |
| Bus 110 | BZOS $\overset{3}{\leftrightarrow}$ Kfo $\overset{1}{\leftrightarrow}$ U $\overset{5}{\leftrightarrow}$ Ad $\overset{19}{\leftrightarrow}$ T $\overset{2}{\leftrightarrow}$ Os | t: 20, f/a: 20 |
| Bus 112 | BNIS $\overset{15}{\leftrightarrow}$ BZD $\overset{19}{\leftrightarrow}$ BOSS | t: 10-20, f/a: 20 |
| Bus 115 | BZD $\overset{7}{\leftrightarrow}$ Os $\overset{14}{\leftrightarrow}$ BHO $\overset{3}{\leftrightarrow}$ Fpo | t: 10-20, f/a: 20-30 |
| Bus 118 | Ot $\overset{5}{\leftrightarrow}$ K $\overset{2}{\leftrightarrow}$ BMEX $\overset{16}{\leftrightarrow}$ BWSS | t: 10-20, f/a: 20 |

| Linie | Fahrtweg | Takt |
|---|---|---|
| 120 | BWIN $\overset{9}{\leftrightarrow}$ PB $\overset{13}{\leftrightarrow}$ Se $\overset{4}{\leftrightarrow}$ Lpo $\overset{3}{\leftrightarrow}$ BWED $\overset{3}{\leftrightarrow}$ Ri $\overset{7}{\leftrightarrow}$ BHBF | t: 10-20, f/a: 20 |
| 122 | Sch $\overset{5}{\leftrightarrow}$ PB $\overset{7}{\leftrightarrow}$ RE $\overset{6}{\leftrightarrow}$ BWM $\overset{28}{\leftrightarrow}$ BWIN | t: 5-20, f/a: 20 |
| 123 | BHBF $\overset{15}{\leftrightarrow}$ Tm $\overset{6}{\leftrightarrow}$ BBEU $\overset{16}{\leftrightarrow}$ JK $\overset{5}{\leftrightarrow}$ Hl $\overset{5}{\leftrightarrow}$ Sie $\overset{3}{\leftrightarrow}$ Rm | t: 10-20, f/a: 20 |
| 124 | BWIN $\overset{10}{\leftrightarrow}$ BTG $\overset{4}{\leftrightarrow}$ Tg $\overset{9}{\leftrightarrow}$ BSZF $\overset{4}{\leftrightarrow}$ BHLS | t: 10-20, f/a: 20 |
| 125 | Olo $\overset{10}{\leftrightarrow}$ RE $\overset{9}{\leftrightarrow}$ Sch $\overset{22}{\leftrightarrow}$ BTG $\overset{4}{\leftrightarrow}$ Tg $\overset{22}{\leftrightarrow}$ BFOH | t: 10-20, f/a: 20 |
| 128 | TXL $\overset{9}{\leftrightarrow}$ Sch $\overset{12}{\leftrightarrow}$ FN $\overset{3}{\leftrightarrow}$ Olo | t: 10, f/a: 20-30 |
| 130 | BSPA $\overset{5}{\leftrightarrow}$ BSRW ($\overset{8}{\leftrightarrow}$ Rl, nur Mo-Fr zur HVZ) | t: 10-20, f/a: 20 |
| 133 | Tg $\overset{3}{\leftrightarrow}$ BTG $\overset{4}{\leftrightarrow}$ Bk $\overset{4}{\leftrightarrow}$ Hh $\overset{17}{\leftrightarrow}$ Hh | t: 10-20, f/a: 20 |
| 136 | BRST $\overset{32}{\leftrightarrow}$ BHD | H: 20, N: 30-60 |
| 139 | P $\overset{2}{\leftrightarrow}$ Rm $\overset{2}{\leftrightarrow}$ Sie $\overset{11}{\leftrightarrow}$ Kd $\overset{3}{\leftrightarrow}$ BMN | t: 20 |
| 140 | BTHF $\overset{2}{\leftrightarrow}$ At $\overset{14}{\leftrightarrow}$ Me $\overset{1}{\leftrightarrow}$ Gs $\overset{6}{\leftrightarrow}$ Pr $\overset{7}{\leftrightarrow}$ Kbo $\overset{12}{\leftrightarrow}$ BOSB | t: 10-20, f/a: 20 |
| 142 | BOSB $\overset{5}{\leftrightarrow}$ Sr $\overset{10}{\leftrightarrow}$ Lu $\overset{2}{\leftrightarrow}$ Ro $\overset{4}{\leftrightarrow}$ Ob $\overset{8}{\leftrightarrow}$ BHBF ($\overset{10}{\leftrightarrow}$ Am $\overset{3}{\leftrightarrow}$ Lpo, nur Mo-Sa tagsüber) | t: 20, a/f: 20 |
| 147 | BHBF $\overset{8}{\leftrightarrow}$ BFST $\overset{1}{\leftrightarrow}$ ULO $\overset{3}{\leftrightarrow}$ Fr $\overset{5}{\leftrightarrow}$ Mk ($\overset{10}{\leftrightarrow}$ BOSB, nur Mo-Sa tagsüber) | t: 10-20, a/f: 20 |
| 150 | Olo $\overset{6}{\leftrightarrow}$ BSNH $\overset{15}{\leftrightarrow}$ BBLB $\overset{26}{\leftrightarrow}$ BBU | H: 10, N: 20 |
| 154 | BBLB $\overset{25}{\leftrightarrow}$ BHH $\overset{11}{\leftrightarrow}$ BRWA $\overset{17}{\leftrightarrow}$ E | t: 20, a/f: 20-30 |

| Linie | Fahrtweg | Takt |
|---|---|---|
| 186 | BGWD $\overset{14}{\leftrightarrow}$ Rd $\overset{4}{\leftrightarrow}$ Fw $\overset{5}{\leftrightarrow}$ Wsg $\overset{2}{\leftrightarrow}$ Slo $\overset{5}{\leftrightarrow}$ BRST $\overset{16}{\leftrightarrow}$ BOSS $\overset{4}{\leftrightarrow}$ BLIS | t: 5-20, a/f: 20 |
| 187 | Tm $\overset{17}{\leftrightarrow}$ Nm $\overset{2}{\leftrightarrow}$ BS $\overset{3}{\leftrightarrow}$ Kt $\overset{7}{\leftrightarrow}$ BIP $\overset{3}{\leftrightarrow}$ BFRU $\overset{14}{\leftrightarrow}$ BLAK | H: 5-20, N: 20 |
| 188 | BRST $\overset{5}{\leftrightarrow}$ BBGT | H: 10, N: 20 |
| 190 | E $\overset{14}{\leftrightarrow}$ BWHH | t: 20, f/a: 20 |
| 191 | BMAZ $\overset{17}{\leftrightarrow}$ KL $\overset{5}{\leftrightarrow}$ BWT | H: 10-20, N: 20 |
| 192 | BFFO $\overset{12}{\leftrightarrow}$ BBDF $\overset{10}{\leftrightarrow}$ BMAZ | H: 10-20, N: 20 |
| 194 | Hpo $\overset{18}{\leftrightarrow}$ BTP $\overset{5}{\leftrightarrow}$ BOK $\overset{3}{\leftrightarrow}$ BRH $\overset{1}{\leftrightarrow}$ BNPL $\overset{9}{\leftrightarrow}$ Fi $\overset{8}{\leftrightarrow}$ BFFO $\overset{7}{\leftrightarrow}$ BSPH | H: 10-20, N: 20 |
| 195 | BMAZ $\overset{17}{\leftrightarrow}$ C $\overset{1}{\leftrightarrow}$ Hd $\overset{6}{\leftrightarrow}$ LL $\overset{11}{\leftrightarrow}$ BMDF | H: 6-7, N: 10, f/a: 20 |
| 197 | BMDF $\overset{10}{\leftrightarrow}$ BKAD $\overset{3}{\leftrightarrow}$ KL $\overset{2}{\leftrightarrow}$ GK $\overset{20}{\leftrightarrow}$ BMEA $\overset{10}{\leftrightarrow}$ BAF $\overset{13}{\leftrightarrow}$ BHH | H: 10, N: 20 |
| 200 | BZOS $\overset{14}{\leftrightarrow}$ BPOP $\overset{3}{\leftrightarrow}$ MH $\overset{4}{\leftrightarrow}$ ULO $\overset{2}{\leftrightarrow}$ MIN $\overset{5}{\leftrightarrow}$ BALX | t: 10, f/a: 20 |
| 204 | BSKR $\overset{5}{\leftrightarrow}$ BJLB $\overset{4}{\leftrightarrow}$ Kt $\overset{9}{\leftrightarrow}$ Sno $\overset{2}{\leftrightarrow}$ Kfo $\overset{3}{\leftrightarrow}$ BZOS | t: 20, So: – |
| 218 | BMN $\overset{4}{\leftrightarrow}$ Th $\overset{3}{\leftrightarrow}$ BHST $\overset{30}{\leftrightarrow}$ BWSS | Mo-Fr: 60/120, Sa/So: 30/60 |
| 220 | BFOH $\overset{19}{\leftrightarrow}$ BWIN $\overset{6}{\leftrightarrow}$ RR ($\overset{9}{\leftrightarrow}$ BTG $\overset{4}{\leftrightarrow}$ Tg, nur Mo-Sa tagsüber) | t: 20, f/a: 20 |
| 221 | BWIN $\overset{4}{\leftrightarrow}$ RR $\overset{4}{\leftrightarrow}$ BEBD $\overset{4}{\leftrightarrow}$ Scha $\overset{5}{\leftrightarrow}$ Sch $\overset{2}{\leftrightarrow}$ Afr $\overset{8}{\leftrightarrow}$ Am $\overset{6}{\leftrightarrow}$ Lpo | t: 10-20, f/a: 20 |
| 222 | Tg $\overset{3}{\leftrightarrow}$ BTG $\overset{9}{\leftrightarrow}$ BWAI | t: 10-20, f/a: 20 |

| Linie | Fahrtweg | Takt |
|---|---|---|
| 277 | BHER $\overset{15}{\leftrightarrow}$ Mf $\overset{13}{\leftrightarrow}$ BBCH | H: 10, N: 20 |
| 282 | Bt $\overset{5}{\leftrightarrow}$ Slo $\overset{4}{\leftrightarrow}$ BRST $\overset{8}{\leftrightarrow}$ BSDE $\overset{2}{\leftrightarrow}$ BATS $\overset{7}{\leftrightarrow}$ Wl | t: 10, f/a: 20 |
| 283 | BRST $\overset{16}{\leftrightarrow}$ BLAK $\overset{11}{\leftrightarrow}$ BMF | H: 10-20, N: 20 |
| 284 | BLIS $\overset{10}{\leftrightarrow}$ BLIO $\overset{6}{\leftrightarrow}$ BLAK ($\overset{10}{\leftrightarrow}$ BRST, nur Mo-Sa tagsüber) | t: 20, f/a: 20 |
| 285 | Os $\overset{6}{\leftrightarrow}$ BZD $\overset{29}{\leftrightarrow}$ BRST | t: 10-20, f/a: 20, Sa-So: – |
| 291 | BMAZ $\overset{4}{\leftrightarrow}$ BPOE $\overset{12}{\leftrightarrow}$ KL $\overset{4}{\leftrightarrow}$ BWT | t: 20, So: – |
| 296 | BLI $\overset{4}{\leftrightarrow}$ Fi $\overset{10}{\leftrightarrow}$ Tk $\overset{13}{\leftrightarrow}$ BKLH | t: 10-20, f/a: 20 |
| 309 | BCHS $\overset{7}{\leftrightarrow}$ So | t: 20 |
| 310 | BCHS $\overset{3}{\leftrightarrow}$ Ad $\overset{18}{\leftrightarrow}$ BHEI $\overset{6}{\leftrightarrow}$ Bli | H: 20, N: –, Sa-So: – |
| 322 | PB $\overset{2}{\leftrightarrow}$ LD $\overset{6}{\leftrightarrow}$ BEBD $\overset{6}{\leftrightarrow}$ RR $\overset{7}{\leftrightarrow}$ BWAI | t: 20, Sa-So: – |
| 327 | Lpo $\overset{4}{\leftrightarrow}$ Np $\overset{5}{\leftrightarrow}$ FN $\overset{3}{\leftrightarrow}$ RE $\overset{9}{\leftrightarrow}$ BSNH | t: 20, So: – |
| 337 | BFKS $\overset{29}{\leftrightarrow}$ BSPA | H: 20, N: 30, a/So: 60 |
| 347 | BOK $\overset{9}{\leftrightarrow}$ BWRS ($\overset{6}{\leftrightarrow}$ WR $\overset{5}{\leftrightarrow}$ BOSB, nur Mo-Sa tagsüber) | t: 20, a/f: 20 |
| 349 | BGWD $\overset{3}{\rightarrow}$ BMS $\overset{8}{\rightarrow}$ Th $\overset{4}{\rightarrow}$ Nd $\overset{5}{\rightarrow}$ BHST $\overset{3}{\rightarrow}$ Th $\overset{5}{\rightarrow}$ BMS $\overset{2}{\rightarrow}$ BGWD | t: 40, Sa-So: – |
| 373 | R $\overset{5}{\rightarrow}$ Zd $\overset{9}{\rightarrow}$ La $\overset{5}{\rightarrow}$ La $\overset{8}{\rightarrow}$ Zd $\overset{8}{\rightarrow}$ R | t: 20, So: – |

| Linie | Fahrtweg | Takt |
|---|---|---|
| N7 | BSPA $\overset{2}{\leftrightarrow}$ AS $\overset{1}{\leftrightarrow}$ Zi $\overset{2}{\leftrightarrow}$ Hs $\overset{2}{\leftrightarrow}$ P $\overset{2}{\leftrightarrow}$ Rm $\overset{2}{\leftrightarrow}$ Sie $\overset{5}{\leftrightarrow}$ JK $\overset{3}{\leftrightarrow}$ BJUN $\overset{2}{\leftrightarrow}$ Mp $\overset{2}{\leftrightarrow}$ Rw $\overset{2}{\leftrightarrow}$ Bmo $\overset{3}{\leftrightarrow}$ BCHS $\overset{5}{\leftrightarrow}$ Ad $\overset{3}{\leftrightarrow}$ Kn $\overset{1}{\leftrightarrow}$ Fpo $\overset{2}{\leftrightarrow}$ Bli $\overset{7}{\leftrightarrow}$ Beo $\overset{1}{\leftrightarrow}$ Bpo $\overset{1}{\leftrightarrow}$ Ei $\overset{2}{\leftrightarrow}$ Kt $\overset{2}{\leftrightarrow}$ BGGS $\overset{1}{\leftrightarrow}$ BYOR $\overset{3}{\leftrightarrow}$ Me $\overset{2}{\leftrightarrow}$ Gs $\overset{3}{\leftrightarrow}$ Sü $\overset{5}{\leftrightarrow}$ Hpo $\overset{3}{\leftrightarrow}$ Hpo $\overset{3}{\leftrightarrow}$ Rk $\overset{7}{\leftrightarrow}$ BNK $\overset{2}{\leftrightarrow}$ Gz $\overset{17}{\leftrightarrow}$ R | n: 30, WE: – |
| N7 | R $\overset{8}{\leftrightarrow}$ BFLH $\overset{2}{\leftrightarrow}$ SXF | n: 30 |
| N8 | BWIN $\overset{3}{\leftrightarrow}$ RR $\overset{3}{\leftrightarrow}$ BKBO $\overset{2}{\leftrightarrow}$ LD $\overset{2}{\leftrightarrow}$ PB $\overset{3}{\leftrightarrow}$ RE $\overset{2}{\leftrightarrow}$ FN $\overset{4}{\leftrightarrow}$ Olo $\overset{3}{\leftrightarrow}$ Pk $\overset{2}{\leftrightarrow}$ BGB $\overset{3}{\leftrightarrow}$ Vo $\overset{1}{\leftrightarrow}$ B $\overset{2}{\leftrightarrow}$ Ro $\overset{1}{\leftrightarrow}$ W $\overset{4}{\leftrightarrow}$ BHKM $\overset{4}{\leftrightarrow}$ BJB $\overset{2}{\leftrightarrow}$ He $\overset{2}{\leftrightarrow}$ Mr $\overset{5-6}{\leftrightarrow}$ Kbo $\overset{2-3}{\leftrightarrow}$ ST $\overset{2}{\leftrightarrow}$ Hpo $\overset{1}{\leftrightarrow}$ Bo $\overset{2}{\leftrightarrow}$ L $\overset{2}{\leftrightarrow}$ BHER | n: 10-30, WE: – |
| N9 | Olo $\overset{3}{\leftrightarrow}$ Np $\overset{5}{\leftrightarrow}$ Lpo $\overset{2}{\leftrightarrow}$ Am $\overset{2}{\leftrightarrow}$ BWF $\overset{1}{\leftrightarrow}$ Bi $\overset{1}{\leftrightarrow}$ Tm $\overset{3}{\leftrightarrow}$ BTGN $\overset{7}{\leftrightarrow}$ BZOS $\overset{2}{\leftrightarrow}$ Kfo $\overset{3}{\leftrightarrow}$ Sno $\overset{1}{\leftrightarrow}$ Gt $\overset{2}{\leftrightarrow}$ Beo $\overset{3}{\leftrightarrow}$ BBUP $\overset{2}{\leftrightarrow}$ Fw $\overset{3}{\leftrightarrow}$ Wsg $\overset{1}{\leftrightarrow}$ Slo $\overset{3}{\leftrightarrow}$ BRST | n: 15-30, WE: – |
| N10 | BZOS $\overset{2}{\leftrightarrow}$ Kfo $\overset{1}{\leftrightarrow}$ U $\overset{5}{\leftrightarrow}$ Ad $\overset{5}{\leftrightarrow}$ BHO $\overset{13}{\leftrightarrow}$ Os $\overset{9}{\leftrightarrow}$ BZD | n: 30 |
| N16 | BNIS $\overset{4}{\leftrightarrow}$ BWSS $\overset{21}{\leftrightarrow}$ BPDH | n: 60 |
| N20 | BFOH $\overset{13}{\leftrightarrow}$ BWIN $\overset{7}{\leftrightarrow}$ PB $\overset{9}{\leftrightarrow}$ Se $\overset{4-8}{\leftrightarrow}$ Lpo $\overset{1-6}{\leftrightarrow}$ BWED $\overset{1}{\leftrightarrow}$ Ri $\overset{6}{\leftrightarrow}$ BHBF | n: 30 |
| N22 | Tg $\overset{3}{\leftrightarrow}$ BTG $\overset{8}{\leftrightarrow}$ BWAI | n: 30 |
| N24 | BWIN $\overset{9}{\leftrightarrow}$ BTG $\overset{3-8}{\leftrightarrow}$ Tg $\overset{8-13}{\leftrightarrow}$ BSZF $\overset{4}{\leftrightarrow}$ BHLS | n: 30 |
| N25 | BTG $\overset{2}{\leftrightarrow}$ Tg $\overset{10}{\leftrightarrow}$ BHED | n: 30 |

| Linie | Fahrtweg | Takt |
|---|---|---|
| 156 | BSTO $\overset{4}{\leftrightarrow}$ BLST $\overset{11}{\leftrightarrow}$ BPLA | t: 20, So: – |
| 160 | BSW $\overset{25}{\leftrightarrow}$ BAGL | t: 20, a/f: 20 |
| 161 | BRD $\overset{12}{\leftrightarrow}$ BWIG $\overset{12}{\leftrightarrow}$ BE | t: 20 |
| 162 | BADL $\overset{14}{\leftrightarrow}$ R | H: 10, N: 20 |
| 163 | BSW $\overset{10}{\leftrightarrow}$ BADL $\overset{14}{\leftrightarrow}$ BGAS $\overset{15}{\leftrightarrow}$ BFLH | t/f: 20, a: 30, Sa/So: 30 |
| 164 | BKPK $\overset{18}{\leftrightarrow}$ BADL $\overset{16}{\leftrightarrow}$ BFLH $\overset{3}{\leftrightarrow}$ SXF | t: 20, f/a: 20 |
| 165 | Mk $\overset{2}{\leftrightarrow}$ He $\overset{6}{\leftrightarrow}$ S $\overset{7}{\leftrightarrow}$ BTP $\overset{5}{\leftrightarrow}$ BPWD $\overset{9}{\leftrightarrow}$ BSW $\overset{11}{\leftrightarrow}$ BSPF | H: 10-20, N: 20 |
| 166 | BSW $\overset{15}{\leftrightarrow}$ BPWD $\overset{6}{\leftrightarrow}$ BTP $\overset{11}{\leftrightarrow}$ Rk $\overset{5}{\leftrightarrow}$ Bo | t: 20 |
| 169 | E $\overset{18}{\leftrightarrow}$ BKPK | H: 10, N: 20 |
| 170 | BRST $\overset{9}{\leftrightarrow}$ BPRI $\overset{7}{\leftrightarrow}$ Ull $\overset{14}{\leftrightarrow}$ Bl $\overset{11}{\leftrightarrow}$ BBMW | t: 10-20, f/a: 20-30 |
| 171 | Hpo $\overset{18}{\leftrightarrow}$ BSO $\overset{5}{\leftrightarrow}$ BNK $\overset{3}{\leftrightarrow}$ Gz $\overset{23}{\leftrightarrow}$ R $\overset{9}{\leftrightarrow}$ BFLH $\overset{3}{\leftrightarrow}$ SXF | H: 10-20, N: 20 |
| 172 | R $\overset{23}{\leftrightarrow}$ Jt $\overset{27}{\leftrightarrow}$ BLRD | H: 10, N: 10-20 |
| 175 | BLRD $\overset{23}{\rightarrow}$ BLRD $\overset{5}{\rightarrow}$ BSC $\overset{8}{\rightarrow}$ BLRD | H: 10-2ß, N: 20 |
| 181 | Wsg $\overset{1}{\leftrightarrow}$ BFB $\overset{13}{\leftrightarrow}$ BLAK $\overset{12}{\leftrightarrow}$ Mf $\overset{12}{\leftrightarrow}$ Br | t: 5-10, f/a: 20 |
| 184 | BLIO $\overset{10}{\leftrightarrow}$ BATS $\overset{9}{\leftrightarrow}$ Ka $\overset{3}{\leftrightarrow}$ At $\overset{2}{\leftrightarrow}$ BTHF ($\overset{7}{\leftrightarrow}$ BSKR, nur Mo-Sa tagsüber) | t: 10-20, a/f: 20 |

| Linie | Fahrtweg | Takt |
|---|---|---|
| 236 | BSPA $\overset{21}{\leftrightarrow}$ Hs | t: 10-20, f/a: 20 |
| 237 | BSPA $\overset{19}{\leftrightarrow}$ BAS | t: 10-20, f/a: 20 |
| 240 | BOSB $\overset{17}{\leftrightarrow}$ BRH $\overset{1}{\leftrightarrow}$ BNPL $\overset{6}{\leftrightarrow}$ BLI $\overset{5}{\leftrightarrow}$ Md $\overset{11}{\leftrightarrow}$ BSTO | t: 10-20, f/a: 20 |
| 245 | BZOS $\overset{5}{\leftrightarrow}$ RP $\overset{13}{\leftrightarrow}$ Tm $\overset{9}{\leftrightarrow}$ BHBF | t: 5-20, f/a: 20 |
| 246 | Fw $\overset{12}{\leftrightarrow}$ BPRI $\overset{11}{\leftrightarrow}$ At $\overset{10}{\leftrightarrow}$ BHER | H: 10, N: 20 |
| 247 | Lpo $\overset{4}{\leftrightarrow}$ Np $\overset{3}{\leftrightarrow}$ BWED $\overset{3}{\leftrightarrow}$ BHUM $\overset{3}{\leftrightarrow}$ BGB $\overset{9}{\leftrightarrow}$ B $\overset{1}{\leftrightarrow}$ Vo $\overset{7}{\leftrightarrow}$ BNB | t: 10-20, f/a: 20 |
| 248 | BWRS $\overset{6}{\leftrightarrow}$ BOSB $\overset{4}{\leftrightarrow}$ BJB $\overset{2}{\leftrightarrow}$ BALX $\overset{5}{\leftrightarrow}$ Sp $\overset{9}{\leftrightarrow}$ Ho $\overset{4}{\leftrightarrow}$ Gs $\overset{7}{\leftrightarrow}$ PL $\overset{9}{\leftrightarrow}$ BSKR ($\overset{4}{\leftrightarrow}$ BSGR $\overset{3}{\leftrightarrow}$ BIP $\overset{4}{\leftrightarrow}$ BBUP $\overset{6}{\leftrightarrow}$ Bt, nur Mo-Sa tagsüber) | t: 10-20, f/a: 20 |
| 249 | BZOS $\overset{3}{\leftrightarrow}$ Kfo $\overset{6}{\leftrightarrow}$ Hz $\overset{3}{\leftrightarrow}$ Bli $\overset{4}{\leftrightarrow}$ BHEI | t: 10, f/a: 20 |
| 250 | BPKW $\overset{8}{\leftrightarrow}$ VIN ($\overset{11}{\leftrightarrow}$ BWOK $\overset{7}{\leftrightarrow}$ FN, nur Mo-Sa tagsüber) | t: 10-20, f/a: 20 |
| 255 | BPKW $\overset{7}{\leftrightarrow}$ BWOK $\overset{7}{\leftrightarrow}$ Olo | t: 10, f/a: 20 |
| 256 | BWAB $\overset{4}{\leftrightarrow}$ BHH $\overset{26}{\leftrightarrow}$ BLI | t: 20, f/a: 20 |
| 260 | BADL $\overset{24}{\leftrightarrow}$ R | t: 10-20, f/a: 20 |
| 265 | BSW $\overset{16}{\leftrightarrow}$ BBMW $\overset{11}{\leftrightarrow}$ BTP $\overset{7}{\leftrightarrow}$ S $\overset{6}{\leftrightarrow}$ He $\overset{2}{\leftrightarrow}$ Mk ($\overset{3}{\leftrightarrow}$ Sp $\overset{3}{\leftrightarrow}$ Mi, nur Mo-Sa tagsüber) | t: 20, f/a: 20 |
| 269 | KL $\overset{3}{\leftrightarrow}$ BKAD $\overset{21}{\leftrightarrow}$ BKPK | t: 20, f/a: 20 |

| Linie | Fahrtweg | Takt |
|---|---|---|
| 377 | BPWD $\overset{13}{\leftrightarrow}$ BNK $\overset{5}{\leftrightarrow}$ BHER | t: 20, f/a: 20 |
| 395 | BMDF $\overset{18}{\rightarrow}$ Hö $\overset{14}{\rightarrow}$ BMDF | t: 20, f/a: 20 |
| 398 | BMDF $\overset{21}{\leftrightarrow}$ E | t: 20, So: – |
| 893 | BZEP $\overset{13}{\leftrightarrow}$ BBU $\overset{33}{\leftrightarrow}$ BHH | t: 20, Sa/So: 60 |
| N1 | BWRS $\overset{3}{\leftrightarrow}$ S $\overset{4}{\leftrightarrow}$ Gr $\overset{2}{\leftrightarrow}$ Kbo $\overset{1}{\leftrightarrow}$ Pr $\overset{2}{\leftrightarrow}$ Ho $\overset{4}{\leftrightarrow}$ Mo $\overset{2}{\leftrightarrow}$ MB $\overset{3}{\leftrightarrow}$ Kus $\overset{1}{\leftrightarrow}$ BS $\overset{1}{\leftrightarrow}$ Nm $\overset{3}{\leftrightarrow}$ Wt $\overset{3}{\leftrightarrow}$ Kfo $\overset{1}{\leftrightarrow}$ BZOS | n: 15-30, WE: – |
| N2 | Rl $\overset{5}{\leftrightarrow}$ Nd $\overset{2}{\leftrightarrow}$ Th $\overset{1}{\leftrightarrow}$ Kd $\overset{2}{\leftrightarrow}$ So $\overset{3}{\leftrightarrow}$ Bmo $\overset{2}{\leftrightarrow}$ Obi $\overset{2}{\leftrightarrow}$ RP $\overset{9}{\leftrightarrow}$ BZOS $\overset{2}{\leftrightarrow}$ Kfo $\overset{3}{\leftrightarrow}$ Wt $\overset{3}{\leftrightarrow}$ Nm $\overset{1}{\leftrightarrow}$ BS $\overset{1}{\leftrightarrow}$ Kus $\overset{5}{\leftrightarrow}$ BPOP $\overset{2}{\leftrightarrow}$ MH $\overset{3}{\leftrightarrow}$ ULO $\overset{10}{\leftrightarrow}$ BHKM $\overset{2}{\leftrightarrow}$ W $\overset{3}{\leftrightarrow}$ Lu $\overset{1}{\leftrightarrow}$ Sz $\overset{3}{\leftrightarrow}$ EB $\overset{3}{\leftrightarrow}$ BSAL $\overset{3}{\leftrightarrow}$ VIN $\overset{3}{\leftrightarrow}$ BPKW | n: 15-30, WE: – |
| N3 | Wt $\overset{3}{\leftrightarrow}$ Kfo $\overset{3}{\leftrightarrow}$ Sno $\overset{1}{\leftrightarrow}$ Hz $\overset{2}{\leftrightarrow}$ Fpo $\overset{2}{\leftrightarrow}$ BHO $\overset{2}{\leftrightarrow}$ BHEI $\overset{5}{\leftrightarrow}$ Bt $\overset{4}{\leftrightarrow}$ DD $\overset{2}{\leftrightarrow}$ T $\overset{4}{\leftrightarrow}$ Os $\overset{4}{\leftrightarrow}$ K $\overset{2}{\leftrightarrow}$ BMEX | n: 30, WE: – |
| N5 | BHKM $\overset{4}{\leftrightarrow}$ BALX $\overset{2}{\leftrightarrow}$ Si $\overset{2}{\leftrightarrow}$ Sr $\overset{2}{\leftrightarrow}$ WR $\overset{2}{\leftrightarrow}$ Ft $\overset{2}{\leftrightarrow}$ Sa $\overset{2}{\leftrightarrow}$ BFA $\overset{2}{\leftrightarrow}$ Md $\overset{13}{\leftrightarrow}$ BWT $\overset{4}{\leftrightarrow}$ KL $\overset{2}{\leftrightarrow}$ GK $\overset{2}{\leftrightarrow}$ C $\overset{2}{\leftrightarrow}$ Hd $\overset{4}{\leftrightarrow}$ LL $\overset{1}{\leftrightarrow}$ Hö | n: 15-30, WE: – |
| N6 | Tg $\overset{2}{\leftrightarrow}$ Bk $\overset{2}{\leftrightarrow}$ Hh $\overset{4}{\leftrightarrow}$ Scha $\overset{3}{\leftrightarrow}$ Sch $\overset{3}{\leftrightarrow}$ Afr $\overset{1}{\leftrightarrow}$ Rb $\overset{3}{\leftrightarrow}$ Se $\overset{3}{\leftrightarrow}$ Lpo $\overset{1}{\leftrightarrow}$ BWED $\overset{2}{\leftrightarrow}$ Ri $\overset{2}{\leftrightarrow}$ Sk $\overset{2}{\leftrightarrow}$ NA $\overset{2}{\leftrightarrow}$ Ob $\overset{1}{\leftrightarrow}$ BFST $\overset{2}{\leftrightarrow}$ ULO $\overset{1}{\leftrightarrow}$ Mi $\overset{2}{\leftrightarrow}$ Ks $\overset{10-15}{\leftrightarrow}$ Me $\overset{1}{\leftrightarrow}$ PL $\overset{2}{\leftrightarrow}$ Ps $\overset{1}{\leftrightarrow}$ BTHF $\overset{2}{\leftrightarrow}$ At $\overset{2}{\leftrightarrow}$ Ka $\overset{2}{\leftrightarrow}$ Ull $\overset{2}{\leftrightarrow}$ Wl $\overset{2}{\leftrightarrow}$ Mf | n: 30, WE: – |

| Linie | Fahrtweg | Takt |
|---|---|---|
| N26 | Se $\overset{7}{\leftrightarrow}$ BBEU $\overset{8}{\leftrightarrow}$ Ha $\overset{5}{\leftrightarrow}$ Nm $\overset{3}{\leftrightarrow}$ Wt $\overset{3}{\leftrightarrow}$ Kfo $\overset{1}{\leftrightarrow}$ BZOS | n: 30 |
| N33 | Tg $\overset{3}{\leftrightarrow}$ BTG $\overset{4}{\leftrightarrow}$ Hh $\overset{20}{\leftrightarrow}$ Hs | n: 30 |
| N39 | Rm $\overset{2}{\leftrightarrow}$ P | n: 30 |
| N40 | Tm $\overset{7}{\leftrightarrow}$ BHBF $\overset{3}{\leftrightarrow}$ NA $\overset{1}{\leftrightarrow}$ BNB $\overset{3}{\leftrightarrow}$ Ro $\overset{1}{\leftrightarrow}$ W $\overset{3}{\leftrightarrow}$ BHKM $\overset{3}{\leftrightarrow}$ BJB $\overset{4}{\leftrightarrow}$ BOSB | n: 30 |
| N42 | Th $\overset{5}{\leftrightarrow}$ BHAL $\overset{8}{\leftrightarrow}$ Fpo $\overset{2}{\leftrightarrow}$ Bli $\overset{2}{\leftrightarrow}$ Beo $\overset{7}{\leftrightarrow}$ BJLB $\overset{4}{\leftrightarrow}$ PL $\overset{2-6}{\leftrightarrow}$ Me $\overset{2-6}{\leftrightarrow}$ Ho $\overset{6}{\leftrightarrow}$ Sp $\overset{4}{\leftrightarrow}$ BHKM $\overset{2}{\leftrightarrow}$ W $\overset{2}{\leftrightarrow}$ BALX | n: 30 |
| N50 | Tk $\overset{5}{\leftrightarrow}$ Fi $\overset{2}{\leftrightarrow}$ BLI $\overset{3}{\leftrightarrow}$ Md $\overset{36}{\leftrightarrow}$ BPKW $\overset{4}{\leftrightarrow}$ BPHD | n: 30 |
| N52 | Olo $\overset{5}{\leftrightarrow}$ BSNH | n: 30 |
| N56 | Md $\overset{23}{\rightarrow}$ BHH $\overset{3}{\rightarrow}$ BWAB $\overset{7}{\rightarrow}$ BGSE $\overset{16}{\rightarrow}$ Md | n: 30 |
| N60 | BADL $\overset{21}{\leftrightarrow}$ BFLH $\overset{2}{\leftrightarrow}$ SXF | n: 30 |
| N61 | BFRH $\overset{12}{\leftrightarrow}$ BRD (nur am WE) $\overset{8}{\leftrightarrow}$ BWIG | n: 30 |
| N65 | BHKM $\overset{4}{\leftrightarrow}$ BJB $\overset{1}{\leftrightarrow}$ He $\overset{5}{\leftrightarrow}$ S $\overset{6}{\leftrightarrow}$ BTP $\overset{3}{\leftrightarrow}$ BPWA $\overset{12}{\leftrightarrow}$ BSW $\overset{3}{\leftrightarrow}$ BADL $\overset{4}{\leftrightarrow}$ BSPF | n: 30 |
| N67 | BSW $\overset{21}{\leftrightarrow}$ BFRH | n: 30 |
| N68 | BADL $\overset{4}{\leftrightarrow}$ BGAS | n: 30 |
| N69 | BWT $\overset{4}{\leftrightarrow}$ E $\overset{16}{\leftrightarrow}$ BKPK | n: 15-30 |

| Linie | Fahrtweg | Takt |
|---|---|---|
| **N79** | BPWA $\overset{5}{\leftrightarrow}$ BSO $\overset{2}{\leftrightarrow}$ BNK $\overset{5}{\leftrightarrow}$ BHER $\overset{11}{\leftrightarrow}$ Mf | n: 30 |
| **N81** | Wsg $\overset{1}{\leftrightarrow}$ BFB $\overset{11}{\leftrightarrow}$ BLAK $\overset{11}{\leftrightarrow}$ BMF | n: 30 |
| **N84** | BTHF $\overset{2}{\leftrightarrow}$ At $\overset{8}{\leftrightarrow}$ BATS $\overset{8}{\leftrightarrow}$ BLIO $\overset{17}{\leftrightarrow}$ BZD | n: 30 |
| **N88** | BRST $\overset{3}{\leftrightarrow}$ BBGT $\overset{17}{\leftrightarrow}$ BOSS $\overset{3}{\leftrightarrow}$ BLIS | n: 30 |

| Linie | Fahrtweg | Takt |
|---|---|---|
| **N90** | BWT $\overset{6}{\leftrightarrow}$ BMDF $\overset{15}{\leftrightarrow}$ BKPK | n: 30 |
| **N91** | BWT $\overset{5}{\leftrightarrow}$ KL | n: 30 |
| **N94** | Hpo $\overset{3}{\leftrightarrow}$ Rk $\overset{10}{\leftrightarrow}$ BTP $\overset{3}{\leftrightarrow}$ BOK $\overset{1}{\leftrightarrow}$ BRH $\overset{1}{\leftrightarrow}$ BNPL $\overset{4}{\leftrightarrow}$ BLI $\overset{4}{\leftrightarrow}$ Md | n: 30 |
| **N95** | BWT $\overset{2}{\leftrightarrow}$ BKAD $\overset{5}{\leftrightarrow}$ BMDF | n: 30 |