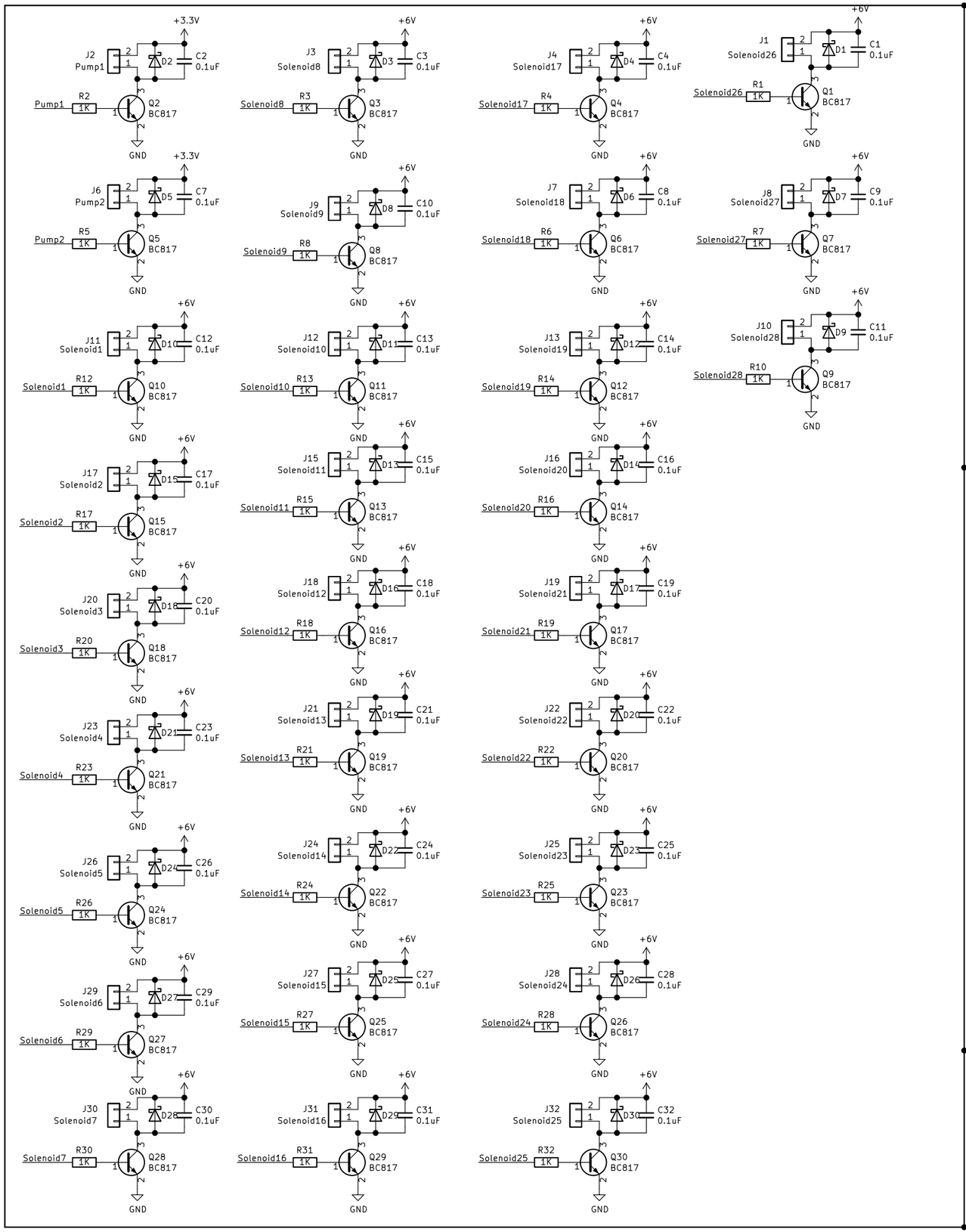

Arduino Nano

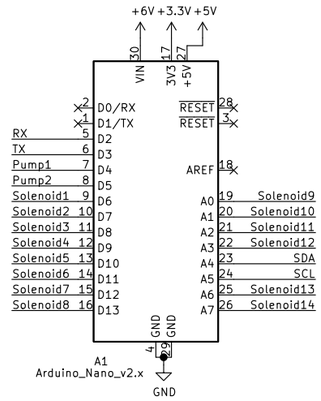

6V Power Input

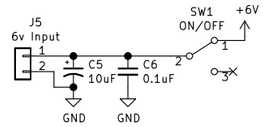

HC-05 Module

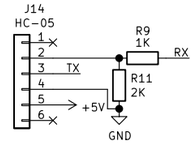

PCF8574 I/O Expanders

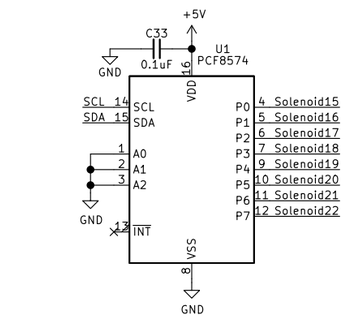

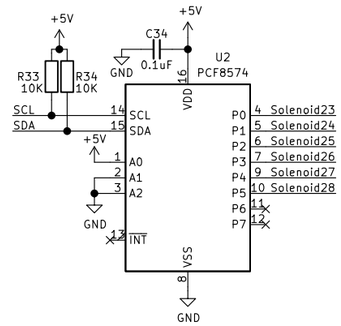

M3 Mounting Holes

DESIGN BY: GIDEON MAINA

Sheet: /
File: Arduino_nano_Pump_Solenoid_HC-05_Board.sch

Title: Arduino_nano_Pump_Solenoid_HC-05_Board

Size: A3	Date: 2021-04-28	Rev: 01
KiCad E.D.A. kicad (5.1.9)-1		Id: 1/1