Parameter Learning in Discrete Active Inference via Message-Passing

Benedikt Waldeck[1][0009−0001−5225−9933]

Ludwig-Maximilians-Universität München, Germany

Abstract. Active inference casts perception, planning, and learning as unified variational inference, with Expected Free Energy (EFE) as the planning objective. Recent work proved EFE minimization equivalent to Variational Free Energy (VFE) minimization under epistemic priors, enabling a message-passing realization on factor graphs. However, existing implementations omit the parameter-learning prior, restricting agents to fixed models. Implementing the full theoretical priors requires a joint prior over states and parameters — incompatible with standard Variational Message Passing (VMP).
We derive Corollary 1: mean-field factorization allows parameter-learning contributions to appear as evaluable KL-divergence expectations within the existing action and state priors, preserving the standard factor graph topology. This is the first VMP-compatible implementation supporting concurrent learning of both the observation model (θ_A) and transition model (θ_B).
On a T-maze POMDP, the EFE-based agent achieves 94% task success versus 49% for a KL-control baseline, reducing observation-model error by 41.7% and transition-model error by 71.8%.

Keywords: Active Inference · *parameter learning* · Planning as Inference · Factor Graphs · Variational Inference

1 Introduction

Active inference unifies perception, planning, and learning as variational inference over a shared generative model [2]. The central planning objective, Expected Free Energy (EFE), decomposes into risk (deviation from preferred states), ambiguity reduction (expected information gain from observations), and novelty (information gain for model parameters), naturally balancing goal pursuit with epistemic exploration. Direct EFE minimization is NP-hard due to conditional entropy terms that create a non-concave landscape [3]. De Vries et al. [6] resolved this by proving that EFE minimization is equivalent to Variational Free Energy (VFE) minimization when the generative model is augmented with three epistemic priors — including an observation-parameter prior $\tilde{p}(\boldsymbol{y}|\boldsymbol{x})$ that encodes the drive to learn model parameters. Nuijten et al. [5] operationalized the action and state priors as message-passing rules on Forney factor graphs, but omitted $\tilde{p}(\boldsymbol{y}|\boldsymbol{x})$ entirely, restricting agents to fixed observation and transition models.

Nuijten and Lukashchuk [4] subsequently showed that the full Theorem 1 priors collapse to a joint prior $\tilde{p}(x_t, \theta)$ over states and model parameters. While theoretically clean, this prior requires a factor graph node depending simultaneously on x_t and θ, which is incompatible with standard VMP. This paper resolves the impasse: using a different decomposition of the EFE and applying mean-field factorization to the parameter posteriors, we derive priors over *singular* variables in which parameter-learning contributions appear as evaluable KL-divergence expectations within the existing $\tilde{p}(u_t)$ and $\tilde{p}(x_t)$. Concretely, we **(i)** state and prove Corollary 1, extending Theorem 1 to concurrent parameter learning; **(ii)** implement the derived priors as local VMP rules preserving the factor graph topology of [5]; and **(iii)** validate on a T-maze POMDP, showing 94.1% task success versus 49.4% for a KL-control baseline and over 41%/71% reductions in observation/transition model error.

2 Background

2.1 Active Inference and Expected Free Energy

An active inference agent minimizes a single free energy functional over all latent variables, including future policies [2]. Planning uses the Expected Free Energy $G(\boldsymbol{u}) = \text{risk} + \text{ambiguity reduction} + \text{novelty}$, where the novelty term rewards parameter-learning opportunities [2]. De Vries et al. [6] (Theorem 1) proved that EFE minimization equals VFE minimization under three epistemic priors: $\tilde{p}(\boldsymbol{u}) = \exp(H[q(\boldsymbol{x}|\boldsymbol{u})])$, $\tilde{p}(\boldsymbol{x}) = \exp(-H[q(\boldsymbol{y}|\boldsymbol{x})])$, and $\tilde{p}(\boldsymbol{y}|\boldsymbol{x}) = \exp(D_{\mathrm{KL}}[q(\theta|\boldsymbol{y}, \boldsymbol{x}) \| q(\theta|\boldsymbol{x})])$. The first two priors drive state-transition and observation uncertainty; the third captures the novelty term. Forney factor graphs (FFGs) implement VFE minimization via Variational Message Passing (VMP), where each factor node sends local messages to adjacent variable nodes using conjugate-exponential closed-form updates [7]. Practical factorized implementation of $\tilde{p}(\boldsymbol{y}|\boldsymbol{x})$ on a factor graph was left open.

2.2 Related Work

Lázaro-Gredilla et al. [3] established that planning is MMAP-hard, motivating tractable reformulations. Nuijten et al. [5] provided the first message-passing realization of EFE minimization but fixed θ_A and θ_B. Nuijten and Lukashchuk [4] proved the full Theorem 1 priors collapse to a joint prior $\tilde{p}(x_t, \theta)$ — theoretically clean but requiring non-standard factor graph nodes connecting x_t and θ simultaneously, incompatible with conventional VMP. Section 3 resolves this via a different EFE decomposition yielding priors over singular variables.

3 Methodology

3.1 Generative Model with Unknown Parameters

We consider a discrete-time POMDP in which the observation and transition models are initially unknown. The generative model factorizes as:

$$p(\boldsymbol{y}, \boldsymbol{x}, \boldsymbol{u}, \theta) = p(\boldsymbol{u})\, p(\theta_A)\, p(\theta_B) \prod_{t=1}^{T} p(y_t \mid x_t, \theta_A)\, p(x_t \mid x_{t-1}, u_t, \theta_B), \tag{1}$$

where θ_A parameterizes observation likelihoods and θ_B transition probabilities. Dirichlet priors $p(\theta_A)$, $p(\theta_B)$ enable closed-form VMP updates via conjugacy. The variational family is the mean-field factorization $q(\boldsymbol{u})q(\theta_A)q(\theta_B)\prod_t q(y_t|x_t)q(x_t|x_{t-1}, u_t)$ — identical to [5] extended by θ_A, θ_B as latent nodes. The augmented VFE is:

$$F[q] = \mathbb{E}_{q(\boldsymbol{y},\boldsymbol{x},\boldsymbol{u},\theta)}\left[\log \frac{q(\boldsymbol{y}, \boldsymbol{x}, \boldsymbol{u}, \theta)}{p(\boldsymbol{y}, \boldsymbol{x}, \boldsymbol{u}, \theta)\, \hat{p}(\boldsymbol{x})\, \tilde{p}(\boldsymbol{u})\, \tilde{p}(\boldsymbol{x})}\right]. \tag{2}$$

3.2 Corollary 1: Epistemic Priors for Parameter Learning

Implementing Theorem 1's observation-parameter prior $\tilde{p}(\boldsymbol{y}|\boldsymbol{x})$ as a dedicated factor graph node creates a joint dependency on x_t and θ that is incompatible with standard VMP, leading to degeneracy [4]. We resolve this by applying mean-field factorizations $q(\theta) = q(\theta_A)q(\theta_B)$ and $q(\theta|\boldsymbol{y}, \boldsymbol{x}, \boldsymbol{u}) = q(\theta_A|\boldsymbol{y}, \boldsymbol{x})\, q(\theta_B|\boldsymbol{x}, \boldsymbol{u})$, separating parameter-learning contributions by role and absorbing them into the existing scalar priors.

Corollary 1 (Epistemic Priors with Parameter Learning). *Let the generative model factorize as in* (1) *with the mean-field variational family above. VFE minimization of* $F[q]$ *in* (2) *is equivalent to EFE minimization when, for each* $t = 1, \ldots, T$*:*

$$\tilde{p}(u_t) \propto \exp\big(\mathbb{E}_{q(x_t, x_{t-1}|u_t)}[-\log q(x_t \mid x_{t-1}, u_t) + D_{\mathrm{KL}}(q(\theta_B \mid x_t, x_{t-1}, u_t) \| q(\theta_B))]\big) \tag{3}$$

$$\tilde{p}(x_t) \propto \exp\big(\mathbb{E}_{q(y_t|x_t)}[\log q(y_t \mid x_t) + D_{\mathrm{KL}}(q(\theta_A \mid y_t, x_t) \| q(\theta_A))]\big) \tag{4}$$

The entropy term $-\log q(x_t|x_{t-1}, u_t)$ in (3) penalizes uncertain transitions (the epistemic drive from [6]); the KL term rewards transitions informative for learning θ_B. Symmetrically, $\tilde{p}(x_t)$ favors unambiguous observations while the KL term over θ_A drives the agent to states that maximize observation-model learning. Together these priors over *singular* variables replace the joint $\tilde{p}(x_t, \theta)$ of [4], preserving the factor graph topology of [5]. VMP inference proceeds in a forward pass ($q(x_t)$ updates), a backward pass (messages from $\tilde{p}(u_t)$, $\tilde{p}(x_t)$ propagating the KL terms), and closed-form Dirichlet updates to θ_A, θ_B (see Fig. 1 in the appendix for the factor graph). A full derivation is in Appendix 6.

Table 1. Comparative performance on the T-maze POMDP over 1000 episodes.

Agent	Success	Steps	ΔA error	ΔB error
KL-control	49.4%	5.41 ± 1.67	+5.2%	−36.6%
EFE (ours)	**94.1%**	$\mathbf{4.49 \pm 1.00}$	**−41.7%**	**−71.8%**

4 Experiments

4.1 Experimental Setup

We evaluate on a T-maze POMDP [2] with $|X|$=4 hidden states, $|Y|$=4 observations, and $|U|$=4 actions, implemented in RxInfer.jl [1]. Both $A \in \mathbb{R}^{4\times4}$ and $B \in \mathbb{R}^{4\times4\times4}$ are initialized from uniform Dirichlet priors and learned from experience. We compare: **(i)** the *EFE-based agent* using Corollary 1 priors, and **(ii)** a *KL-control baseline* with uniform $\tilde{p}(u_t)$, $\tilde{p}(x_t)$. Settings: planning horizon T=7, 5 VMP iterations, 1000 episodes; error is Frobenius norm vs. ground truth.

4.2 Results

Table 1 summarizes the results (learning curves in Figs. 2–4 in the appendix). The EFE-based agent achieves 94.1% success versus 49.4% for KL-control (90.5% relative improvement) and reaches the goal in 4.49±1.00 steps versus 5.41±1.67. Observation-model error drops 41.7% (from 1.000 to 0.583) with the EFE agent; the KL-control baseline shows no improvement (+5.2%), confirming that without epistemic priors the agent fails to identify θ_A. Transition-model error drops 71.8% (from 3.969 to 1.118) for the EFE agent versus 36.6% for the baseline, with the KL terms in Corollary 1 actively directing the agent toward transitions informative about θ_B.

5 Conclusion

We presented Corollary 1: a factorized form of the Theorem 1 epistemic priors [6] in which parameter-learning contributions are absorbed into the scalar priors $\tilde{p}(u_t)$ and $\tilde{p}(x_t)$ via mean-field factorization, rather than as a joint prior over states and parameters. This circumvents the VMP incompatibility that prevented prior parameter-learning attempts [4] while extending the tractable framework of [5]. Experiments confirm 94.1% vs. 49.4% success and substantially superior parameter recovery.

Two limitations merit attention. First, the conditional entropy terms introduce non-concavity [3], yielding convergence sensitivity to planning horizon and VMP iteration count. Second, parameter posteriors are not propagated into future rollouts, underestimating the value of exploratory actions. Future work will address convergence and extend to fully Bayesian multi-step lookahead.

Code Availability The source code and simulation environment for this work are publicly available at https://github.com/skoghoern/Parameter-Learning-in-Discrete-Active-Inference-via-Message-Passing.

Acknowledgments. The author thanks Wouter Nuijten, Fraser , Carlo, and Andrew for insightful discussions.

Disclosure of Interests. The authors have no competing interests to declare that are relevant to the content of this article.

Bibliography

[1] Bagaev, D., Podusenko, A., De Vries, B.: Rxinfer: A julia package for reactive real-time bayesian inference. Journal of Open Source Software **8**(84), 5161 (2023)

[2] Da Costa, L., Parr, T., Sajid, N., Veselic, S., Neacsu, V., Friston, K.: Active inference on discrete state-spaces: A synthesis. Journal of Mathematical Psychology **99**, 102447 (Dec 2020). https://doi.org/10.1016/j.jmp.2020.102447, http://dx.doi.org/10.1016/j.jmp.2020.102447

[3] Lázaro-Gredilla, M., Ku, L.Y., Murphy, K.P., George, D.: What type of inference is planning? (2025), https://arxiv.org/abs/2406.17863

[4] Nuijten, W.W.L., Lukashchuk, M.: Active inference is a subtype of variational inference (2025), https://arxiv.org/abs/2511.18955

[5] Nuijten, W.W.L., Lukashchuk, M., van de Laar, T., de Vries, B.: A message passing realization of expected free energy minimization (2026), https://arxiv.org/abs/2508.02197

[6] de Vries, B., Nuijten, W., van de Laar, T., Kouw, W., Adamiat, S., Nisslbeck, T., Lukashchuk, M., Nguyen, H.M.H., Araya, M.H., Tresor, R., Jenneskens, T., Nikoloska, I., Subramanian, R.G., van Erp, B., Bagaev, D., Podusenko, A.: Expected free energy-based planning as variational inference (2025), https://arxiv.org/abs/2504.14898

[7] Şenöz, I., van de Laar, T., Bagaev, D., de Vries, B.: Variational message passing and local constraint manipulation in factor graphs. Entropy **23**(7), 807 (jun 2021). https://doi.org/10.3390/e23070807, https://doi.org/10.3390/e23070807

6 Proof of Corollary 1

This proof is an adjusted version of the proof of Theorem 1, originally derived in [6].

$$F[q] = \mathbb{E}_{q(\boldsymbol{y},\boldsymbol{x},\boldsymbol{u},\theta)}\left[\log \frac{q(\boldsymbol{y},\boldsymbol{x},\boldsymbol{u},\theta)}{p(\boldsymbol{y},\boldsymbol{x},\boldsymbol{u},\theta)\hat{p}(\boldsymbol{x})\tilde{p}(\boldsymbol{u})\tilde{p}(\boldsymbol{x})}\right] \tag{5}$$

$$= \mathbb{E}_{q(\boldsymbol{u})}\left[\log \frac{q(\boldsymbol{u})}{p(\boldsymbol{u})} + \underbrace{\mathbb{E}_{q(\boldsymbol{y},\boldsymbol{x},\theta|\boldsymbol{u})}\left[\log \frac{q(\boldsymbol{y},\boldsymbol{x},\theta|\boldsymbol{u})}{p(\boldsymbol{y},\boldsymbol{x},\theta|\boldsymbol{u})\hat{p}(\boldsymbol{x})\tilde{p}(\boldsymbol{u})\tilde{p}(\boldsymbol{x})}\right]}_{C(\boldsymbol{u})}\right] \tag{6}$$

$$= \mathbb{E}_{q(\boldsymbol{u})}\left[\log \frac{q(\boldsymbol{u})}{p(\boldsymbol{u})} + \underbrace{G(\boldsymbol{u}) + \mathbb{E}_{q(\boldsymbol{y},\boldsymbol{x},\theta|\boldsymbol{u})}\left[\log \frac{q(\boldsymbol{y},\boldsymbol{x},\theta|\boldsymbol{u})}{p(\boldsymbol{y},\boldsymbol{x},\theta|\boldsymbol{u})}\right] + \text{constant}}_{C(\boldsymbol{u}) \text{ if (13) holds}}\right] \tag{7}$$

$$= \mathbb{E}_{q(\boldsymbol{u})}[G(\boldsymbol{u})] + \mathbb{E}_{q(\boldsymbol{y},\boldsymbol{x},\boldsymbol{u},\theta)}\left[\log \frac{q(\boldsymbol{y},\boldsymbol{x},\boldsymbol{u},\theta)}{p(\boldsymbol{y},\boldsymbol{x},\boldsymbol{u},\theta)}\right] + \text{constant} \quad \text{if (13) holds} \tag{8}$$

In the above derivation, we still need to prove the transition for $C(\boldsymbol{u})$ from (6) to (7), which we address next.

Lemma 1: Proof of equivalence for $C(\boldsymbol{u})$ in (6) and (7)

$$C(\boldsymbol{u}) = \mathbb{E}_{q(\boldsymbol{y},\boldsymbol{x},\theta|\boldsymbol{u})}\left[\log \frac{\overbrace{q(\boldsymbol{y},\boldsymbol{x},\theta|\boldsymbol{u})}^{\text{posterior}}}{\underbrace{p(\boldsymbol{y},\boldsymbol{x},\theta|\boldsymbol{u})}_{\text{predictive}}\ \underbrace{\hat{p}(\boldsymbol{x})}_{\text{utility}}\ \underbrace{\tilde{p}(\boldsymbol{u})\tilde{p}(\boldsymbol{x})}_{\text{epistemic priors}}}\right] \tag{9}$$

$$= \underbrace{\mathbb{E}_{q(\boldsymbol{y},\boldsymbol{x},\theta|\boldsymbol{u})}\left[\log\left(\underbrace{\frac{q(\boldsymbol{x}|\boldsymbol{u})}{\hat{p}(\boldsymbol{x})}}_{\text{risk}} \cdot \underbrace{\frac{1}{q(\boldsymbol{y}|\boldsymbol{x})}}_{\text{ambiguity}}\ \underbrace{\frac{q(\theta)}{q(\theta|\boldsymbol{y},\boldsymbol{x},\boldsymbol{u})}}_{\text{novelty}}\right)\right]}_{G(\boldsymbol{u})=\text{Expected Free Energy}} \tag{10}$$

$$+ \mathbb{E}_{q(\boldsymbol{y},\boldsymbol{x},\theta|\boldsymbol{u})}\left[\log\left(\underbrace{\frac{\hat{p}(\boldsymbol{x})q(\boldsymbol{y}|\boldsymbol{x})q(\theta|\boldsymbol{y},\boldsymbol{x},\boldsymbol{u})}{q(\boldsymbol{x}|\boldsymbol{u})q(\theta)}}_{\text{inverse factors from } G(\boldsymbol{u})} \cdot \underbrace{\frac{q(\boldsymbol{y},\boldsymbol{x},\theta|\boldsymbol{u})}{p(\boldsymbol{y},\boldsymbol{x},\theta|\boldsymbol{u})\hat{p}(\boldsymbol{x})\tilde{p}(\boldsymbol{u})\tilde{p}(\boldsymbol{x})}}_{\text{factors from (9)}}\right)\right]$$

$$= G(\boldsymbol{u}) + \underbrace{\mathbb{E}_{q(\boldsymbol{y},\boldsymbol{x},\theta|\boldsymbol{u})}\left[\log \frac{q(\boldsymbol{y},\boldsymbol{x},\theta|\boldsymbol{u})}{p(\boldsymbol{y},\boldsymbol{x},\theta|\boldsymbol{u})}\right]}_{=B(\boldsymbol{u})} + \underbrace{\mathbb{E}_{q(\boldsymbol{y},\boldsymbol{x},\theta|\boldsymbol{u})}\left[\log \frac{q(\boldsymbol{y}|\boldsymbol{x})q(\theta|\boldsymbol{y},\boldsymbol{x},\boldsymbol{u})}{q(\boldsymbol{x}|\boldsymbol{u})q(\theta)\tilde{p}(\boldsymbol{u})\tilde{p}(\boldsymbol{x})}\right]}_{\text{choose epistemic priors to make this constant}} \tag{11}$$

Isolating the final terms of the derivation gives:

$$C(\boldsymbol{u}) = G(\boldsymbol{u}) + B(\boldsymbol{u}) + \mathbb{E}_{q(\boldsymbol{y},\boldsymbol{x},\theta|\boldsymbol{u})}\left[\log \frac{q(\boldsymbol{y}|\boldsymbol{x})q(\theta|\boldsymbol{y},\boldsymbol{x},\boldsymbol{u})}{q(\boldsymbol{x}|\boldsymbol{u})q(\theta)\tilde{p}(\boldsymbol{u})\tilde{p}(\boldsymbol{x})}\right] \tag{12}$$

To make this term constant, we define:

$$\mathbb{E}_{q(\boldsymbol{y},\boldsymbol{x},\theta|\boldsymbol{u})}\left[\log \frac{q(\boldsymbol{y}|\boldsymbol{x})q(\theta|\boldsymbol{y},\boldsymbol{x},\boldsymbol{u})}{q(\boldsymbol{x}|\boldsymbol{u})q(\theta)\tilde{p}(\boldsymbol{u})\tilde{p}(\boldsymbol{x})}\right] = C \tag{13}$$

Expanding the logarithm:

$$\mathbb{E}_{q(\boldsymbol{y},\boldsymbol{x},\theta|\boldsymbol{u})}\left[\log q(\boldsymbol{y}|\boldsymbol{x}) + \log q(\theta|\boldsymbol{y},\boldsymbol{x},\boldsymbol{u}) - \log q(\boldsymbol{x}|\boldsymbol{u}) - \log q(\theta) - \log \tilde{p}(\boldsymbol{u}) - \log \tilde{p}(\boldsymbol{x})\right] = C \tag{14}$$

Using mean-field factorization for the parameters:

- **Factorized Prior:** $q(\theta) = q(\theta_A)q(\theta_B)$

– **Factorized Posterior:** $q(\theta|\boldsymbol{y},\boldsymbol{x},\boldsymbol{u}) = q(\theta_A|\boldsymbol{y},\boldsymbol{x})q(\theta_B|\boldsymbol{x},\boldsymbol{u})$

We can rewrite and group the expectation terms:

$$\mathbb{E}_{q(\boldsymbol{x}|\boldsymbol{u})}\left[\mathbb{E}_{q(\boldsymbol{y}|\boldsymbol{x})}\left[\log q(\boldsymbol{y}|\boldsymbol{x}) + \mathbb{E}_{q(\theta_A|\boldsymbol{y},\boldsymbol{x},\boldsymbol{u})}\left[\log \frac{q(\theta_A|\boldsymbol{y},\boldsymbol{x},\boldsymbol{u})}{q(\theta_A)}\right]\right] - \log \tilde{p}(\boldsymbol{x})\right]$$
$$+ \mathbb{E}_{q(\boldsymbol{x}|\boldsymbol{u})}\left[-\log q(\boldsymbol{x}|\boldsymbol{u}) + \mathbb{E}_{q(\theta_B|\boldsymbol{x},\boldsymbol{u})}\left[\log \frac{q(\theta_B|\boldsymbol{x},\boldsymbol{u})}{q(\theta_B)}\right] - \log \tilde{p}(\boldsymbol{u})\right] = C \tag{15}$$

Recognizing D_{KL} terms and substituting $q(\boldsymbol{y}|\boldsymbol{x})$ and $q(\boldsymbol{x}|\boldsymbol{u})$ with the factorised $\prod_t q(y_t|x_t)$, $\prod_t q(x_t|x_{t-1},u_t)$, and $\prod_t q(\theta|y_t,x_{t-1},x_t,u_t)$:

$$\sum_t \mathbb{E}_{q(x_t|u_t)}\left[\mathbb{E}_{q(y_t|x_t)}\left[\log q(y_t|x_t) + D_{KL}(q(\theta_A|y_t,x_t) \parallel q(\theta_A))\right] - \log \tilde{p}(x_t)\right]$$
$$+ \mathbb{E}_{q(x_t,x_{t-1}|u_t)}\left[-\log q(x_t|x_{t-1},u_t) + D_{KL}(q(\theta_B|x_t,x_{t-1},u_t) \parallel q(\theta_B))\right] - \log \tilde{p}(u_t) = C \tag{16}$$

Solving with respect to $\tilde{p}(u_t)$ and $\tilde{p}(x_t)$, the expression becomes constant when:

$$\tilde{p}(u_t) \propto \exp\left(\mathbb{E}_{q(x_t,x_{t-1}|u_t)}\left[-\log q(x_t|x_{t-1},u_t) + D_{KL}(q(\theta_B|x_t,x_{t-1},u_t) \parallel q(\theta_B))\right]\right) \tag{17}$$

$$\tilde{p}(x_t) \propto \exp\left(\mathbb{E}_{q(y_t|x_t)}\left[\log q(y_t|x_t) + D_{KL}(q(\theta_A|y_t,x_t) \parallel q(\theta_A))\right]\right) \tag{18}$$

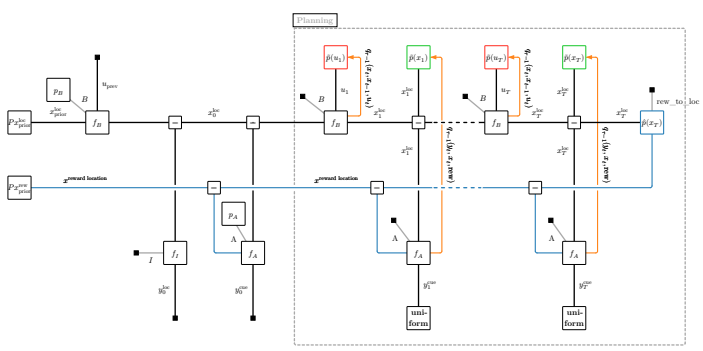

Fig. 1. Forney factor graph for a time roll out of the T-maze POMDP. Planning steps use mean of current Dirichlet nodes θ_A, θ_B; the epistemic prior nodes $\tilde{p}(u_t)$ and $\tilde{p}(x_t)$ implement Corollary 1.

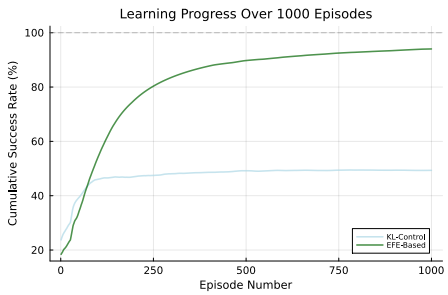

Fig. 2. Cumulative success rate. EFE agent (solid) reaches 94.1% vs. 49.4% for KL-control (dashed).

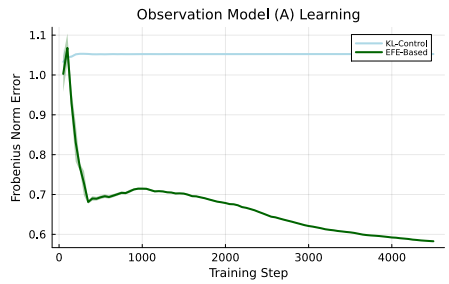

Fig. 3. Observation model (A) error over episodes. EFE reduces by 41.7%; KL-control fails to improve (+5.2%).

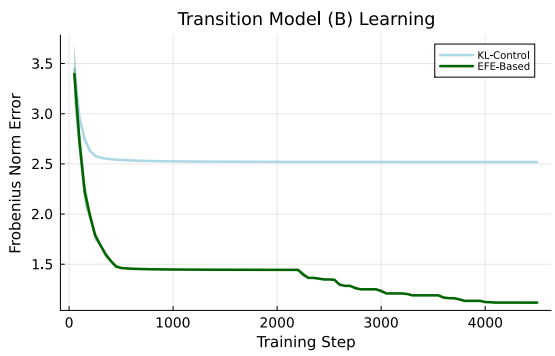

Fig. 4. Transition model (B-tensor) estimation error over 1000 episodes. The EFE-based agent achieves 71.8% error reduction versus 36.6% for KL-control.

7 Derivation of Expected Free Energy Formula

We begin with the general formula for the Expected Free Energy (EFE), conditioning all variables on the action $\boldsymbol{u}$. Factorizing the variational distribution in the numerator yields:

$$G(\boldsymbol{u}) = \mathbb{E}_{q(\boldsymbol{y},\boldsymbol{x},\theta|\boldsymbol{u})}\left[\log \frac{q(\boldsymbol{x},\theta|\boldsymbol{u})}{p(\boldsymbol{y},\boldsymbol{x},\theta|\boldsymbol{u})}\right] \tag{19}$$

$$= \mathbb{E}_{q(\boldsymbol{y},\boldsymbol{x},\theta|\boldsymbol{u})}\left[\log \frac{q(\boldsymbol{x}|\boldsymbol{u})q(\theta|\boldsymbol{x},\boldsymbol{u})}{p(\boldsymbol{y},\boldsymbol{x},\theta|\boldsymbol{u})}\right] \tag{20}$$

By applying the mean-field approximation to the variational model, $q(\boldsymbol{y},\boldsymbol{x},\theta \mid \boldsymbol{u}) \approx p(\boldsymbol{y} \mid \boldsymbol{x},\theta)q(\boldsymbol{x} \mid \boldsymbol{u})q(\theta)$, we assume $q(\theta|\boldsymbol{x},\boldsymbol{u}) \approx q(\theta)$. This simplifies the expression to:

$$G(\boldsymbol{u}) = \mathbb{E}_{q(\boldsymbol{y},\boldsymbol{x},\theta|\boldsymbol{u})}\left[\log \frac{q(\boldsymbol{x}|\boldsymbol{u})q(\theta)}{p(\boldsymbol{y},\boldsymbol{x},\theta|\boldsymbol{u})}\right] \tag{21}$$

Next, we expand the generative model in the denominator using the product rule:

$$p(\boldsymbol{y}, \boldsymbol{x}, \theta|\boldsymbol{u}) = p(\theta|\boldsymbol{y}, \boldsymbol{x}, \boldsymbol{u})p(\boldsymbol{y}|\boldsymbol{x}, \boldsymbol{u})p(\boldsymbol{x}|\boldsymbol{u}) \tag{22}$$

Under the standard properties of a Partially Observable Markov Decision Process (POMDP), the observation $\boldsymbol{y}$ is conditionally independent of the action $\boldsymbol{u}$ given the state $\boldsymbol{x}$, ensuring $p(\boldsymbol{y}|\boldsymbol{x}, \boldsymbol{u}) = p(\boldsymbol{y}|\boldsymbol{x})$. Furthermore, because the true posterior of the parameters θ is intractable, we substitute it with the agent's approximate belief. This substitution inherently assumes the agent will act to successfully reduce Free Energy in the future, allowing the approximation $p(\theta|\boldsymbol{y}, \boldsymbol{x}, \boldsymbol{u}) \approx q(\theta|\boldsymbol{y}, \boldsymbol{x}, \boldsymbol{u})$.

During planning, the agent seeks to realize its goals rather than strictly minimizing the divergence between its beliefs and the true generative model. Consequently, the generative model is "biased" by the agent's prior preferences over states, replacing the predictive transition model $p(\boldsymbol{x}|\boldsymbol{u})$ with the prior preference distribution $\hat{p}(\boldsymbol{x})$. Incorporating these assumptions, the biased generative model factorizes as:

$$p(\boldsymbol{y}, \boldsymbol{x}, \theta|\boldsymbol{u}) \approx \hat{p}(\boldsymbol{x})p(\boldsymbol{y}|\boldsymbol{x})q(\theta|\boldsymbol{y}, \boldsymbol{x}, \boldsymbol{u}) \tag{23}$$

Substituting this biased generative model back into Equation 21 yields the final formula for the Expected Free Energy (aligning with [2]):

$$G(\boldsymbol{u}) = \mathbb{E}_{q(\boldsymbol{y}, \boldsymbol{x}, \theta|\boldsymbol{u})}\left[\log \frac{q(\boldsymbol{x}|\boldsymbol{u})q(\theta)}{p(\boldsymbol{y}|\boldsymbol{x})\hat{p}(\boldsymbol{x})q(\theta|\boldsymbol{y}, \boldsymbol{x}, \boldsymbol{u})}\right] \tag{24}$$

$$= \mathbb{E}_{q(\boldsymbol{y}|\boldsymbol{x}, \theta)q(\boldsymbol{x}|\boldsymbol{u})q(\theta)}\left[\log \frac{q(\boldsymbol{x}|\boldsymbol{u})q(\theta)}{p(\boldsymbol{y}|\boldsymbol{x})\hat{p}(\boldsymbol{x})q(\theta|\boldsymbol{y}, \boldsymbol{x}, \boldsymbol{u})}\right] \tag{25}$$