Electromagnetic Induction

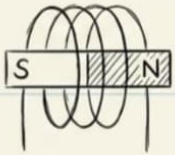

Magnetic flux :-

Denoted by $\Phi = \vec{B} \cdot \vec{A} = BA\cos\theta$

$$\Phi = \int \vec{B} \cdot d\vec{A}$$

↳ It can be +ve or −ve.

Its SI is weber (Wb).
In CGS: maxwell (Mx)
$1\ Wb = 10^8\ Mx$
$\vec{B}$: SI ⇒ Wb/m^2 or T.

Introduction :-

Q Why not changing $\vec{B}$ produces $\vec{E}$ & I?

This was made possible by Michael Faraday & Joseph Henry creating EMI.

Faraday's experiments :-

Faraday performed 3 experiments to show that change in magnetic flux can lead to induced emf (& hence induced current).

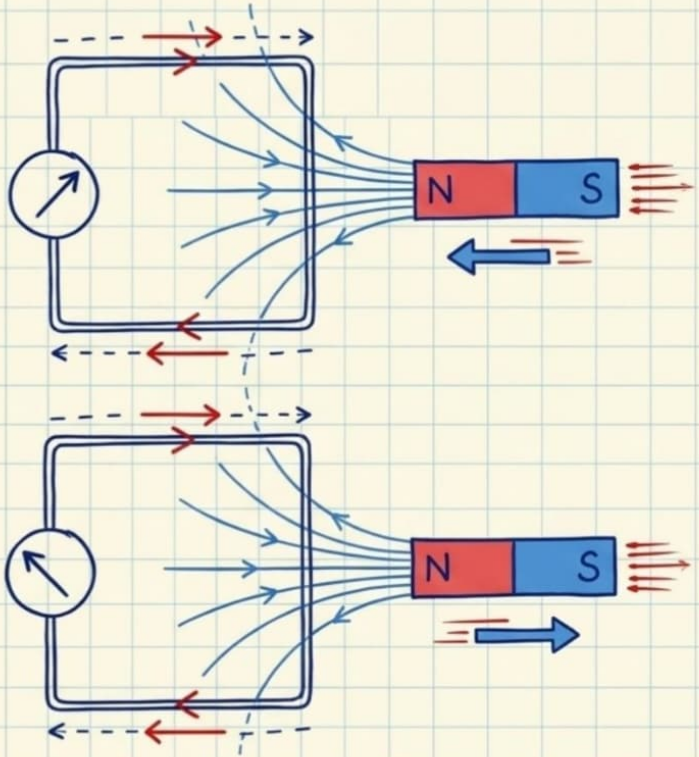

Faraday's laws :-

* 1st law :-

He stated that induced emf is produced in a coil where magnetic flux changes w.r.t time.

This induced emf lasts only till the time flux is changing.

* 2nd law :-

Value of emf ($\mathcal{E}$) is given as :-

$$\mathcal{E} = -\frac{d\Phi}{dt} \quad \text{or} \quad \boxed{\mathcal{E} = -\frac{N(\Phi_2 - \Phi_1)}{t}}$$

(varies Wb/s)

Lenz's law :-

It states that the direction of induced emf (induced current) opposes the change in flux.

Motional emf :-

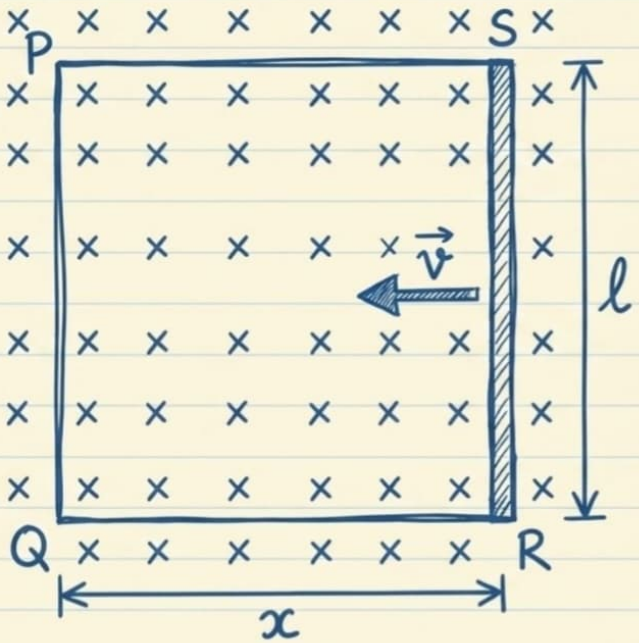

Force: $F = I\ell B$

$$= \left(\frac{B\ell v}{R}\right)\cdot \ell \cdot B$$

$$\boxed{\therefore F = \frac{B^2\ell^2 v}{R}}$$

$$\text{Power} = F\cdot v$$

$$\boxed{\therefore \text{Power} = F\cdot v = \frac{B^2\ell^2 v^2}{R}}$$!

NOTE: If a metal rod of length L rotated at angular speed ω is perpendicular to magnetic field $\vec{B}$, so the expression for its emf induced will be :-

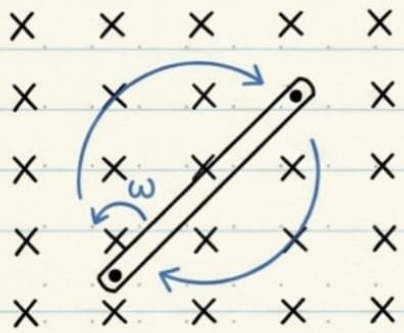

$$\Phi = BA = B\pi r^2 = B\pi L^2$$

r is replaced by length L

$$\varepsilon = \frac{\text{change in flux}}{\text{time}} = \frac{B\pi L^2}{t}$$

$$\boxed{\therefore\ \varepsilon = B\pi L^2 f}$$

Also, $\omega = 2\pi f$ or $f = \frac{\omega}{2\pi}$

$$\therefore \mathcal{E} = \frac{B\cancel{\pi}L^2 \cdot \omega}{2\cancel{\pi}} = \frac{BL^2\omega}{\cancel{2}}$$

$$\boxed{\mathcal{E} = \frac{BL^2\omega}{2}}$$

$$\therefore I = \frac{\mathcal{E}}{R} = \frac{BL^2\omega}{2R}$$

$\omega = \text{rad/s}$

$\therefore x = \text{rotations/s} = x \cdot 2\pi \text{ rad/s}.$

Also note: $\mathcal{E} = \frac{-d\Phi}{dt} = \frac{-d(B \cdot A)}{dt}$

Here, $A = \pi r^2 = \pi a^2$.

$\therefore \mathcal{E} = \frac{-d(B \cdot \pi a^2)}{dt} = \frac{-B\pi a^2}{T} = -B\pi a^2 f.$

Emf Induced due to change in orientation :-

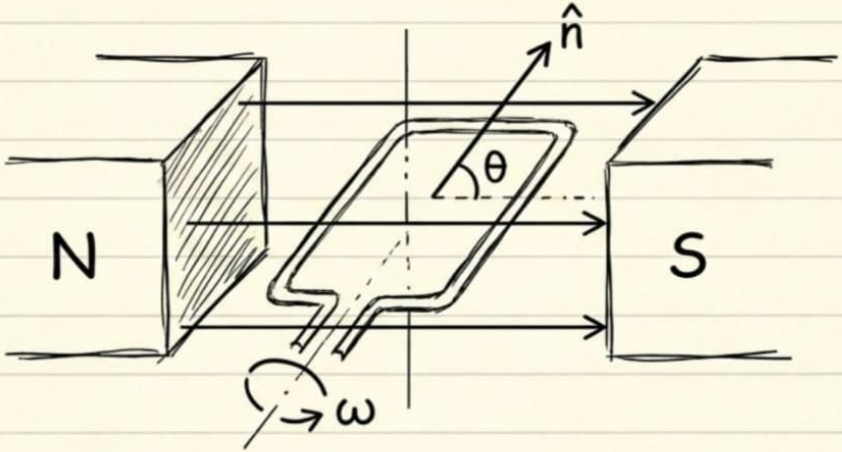

$$\Phi = B \cdot A \cdot \cos\theta$$
$$= B \cdot A \cdot \cos(\omega t) \qquad (\because \theta = \omega t)$$

$$\therefore \quad \mathcal{E} = -\frac{d\Phi}{dt}$$

$$\text{or} \quad \mathcal{E} = -\frac{d(B \cdot A \cdot \cos(\omega t))}{dt}$$

$$\text{or} \quad \mathcal{E} = -BA \cdot \frac{d(\cos(\omega t))}{dt}$$

$$\text{or} \quad \mathcal{E} = -BA \cdot \omega(-\sin(\omega t))$$

$$\therefore \quad \mathcal{E} = BA\omega \sin(\omega t)$$

For N no. of turns,

$$\mathcal{E} = NBA\omega \sin(\omega t)$$

$\mathcal{E}$ will be max when $\sin(\omega t) = 1$

$$\therefore \quad \boxed{\mathcal{E}_0 = NBA\omega} \quad \text{(peak or max emf)}$$

Self inductance :-

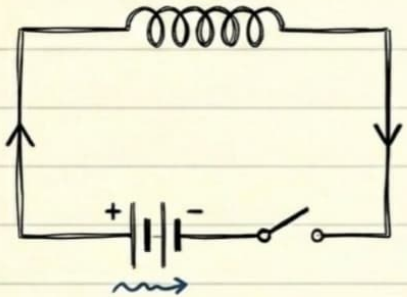

In the coil,

$$\Phi \propto I$$

or $$\Phi = L \cdot I$$

where L is known as coefficient of inductivity or inductance. $\therefore L = \frac{\Phi}{I}$

SI of L is Henry (H).
Dimensions of L are $ML^2T^{-2}A^{-2}$

As, $\varepsilon = \frac{-d\Phi}{dt}$ $\therefore \varepsilon = \frac{-d(LI)}{dt}$ $\boxed{\therefore \varepsilon = -L\left(\frac{dI}{dt}\right)}$

Self - inductance of a long solenoid :-

Let us consider a long - solenoid of length 'ℓ' & let current through it be 'I'.

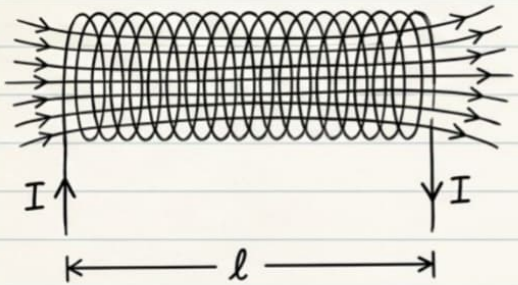

Thus, magnetic field inside solenoid is given by,

$$B = \mu_0 \cdot n \cdot I$$

Thus, flux linked with each turn is given by,

$$\Phi = B \cdot A$$

or $$\Phi = \mu_0 \cdot n \cdot I \cdot A$$

So, total flux linked with entire solenoid of N turns,

$$\Phi = \mu_0 n N I A$$

or $$L \cdot I = \mu_0 n N I A$$

$$\therefore L = \mu_0 n N A$$

$$\boxed{L = \mu_0 n^2 A \ell}$$ $\left(n = \frac{N}{\ell} \text{ or } N = n \cdot \ell\right)$

This implies that,

- $L \propto$ no. of turns (n)
- $\propto$ Area of each turn (A)
- $\propto$ Separation length (ℓ)
- $\propto$ permeability of core's medium (μ_0)

Mutual inductance :-

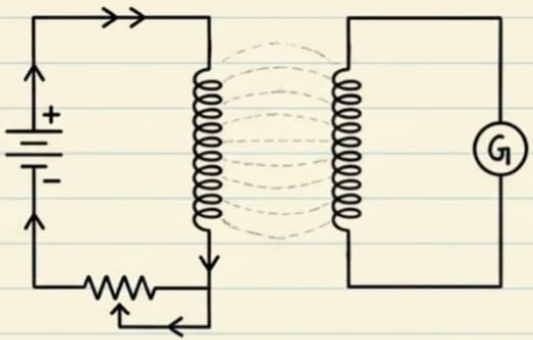

1. The coil connected to source of current passing is called as primary coil whereas the current induced in another coil due to change in current in primary coil is called as secondary coil.

2. In primary coil, the changing current produce variable magnetic field which when linked with the secondary coil experiences time varying electric flux and thus primary coil induces emf in secondary coil & thereby current.

3. $\Phi = MI$, where M is the coefficient of mutual induction. Its SI is Henry (H)

$$\boxed{\varepsilon = -\frac{d[MI]}{dt} = M\left[-\frac{dI}{dt}\right]}$$

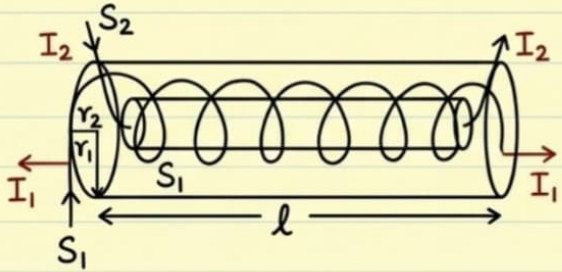

Let us consider 2 long co-axial solenoids (one would over another) solenoids S_1 & S_2 carrying currents I_1 & I_2 respectively.

Let, 'ℓ' be the length of each solenoid, r_1 & r_2 be their respective radius, N_1 & N_2 be their respective no. of turns in the solenoid & S_2 be $(A) = \pi r_2^2$.

Let us pass time varying current I_1 through solenoid S_1.

$$B_1 = \frac{\mu_0 N_1 I_1}{\ell}$$

Due to this field, the flux (Φ) linked to S_2 will be,

$$\Phi_2 = N_2 \cdot B_1 \cdot A = \frac{N_2 \cdot \mu_0 \cdot N_1 \cdot A \cdot I_1}{\ell}$$

$\therefore$ Mutual inductance of coil w.r.t I_1,

$$M_{21} = \frac{\Phi_2}{I_1} = \frac{N_2 \mu_0 N_1 A \cancel{I_1}}{\cancel{I_1} \ell}$$

$$M_{21} = \frac{N_2 \mu_0 N_1 A}{\ell}$$

Similarly,

$$M_{12} = \frac{\Phi_1}{I_2} = \frac{\mu_0 N_1 N_2 A}{\ell}$$

$$= \mu_0 n_1 n_2 A \cdot \ell$$

$$\boxed{M_{12} = M_{21}}$$