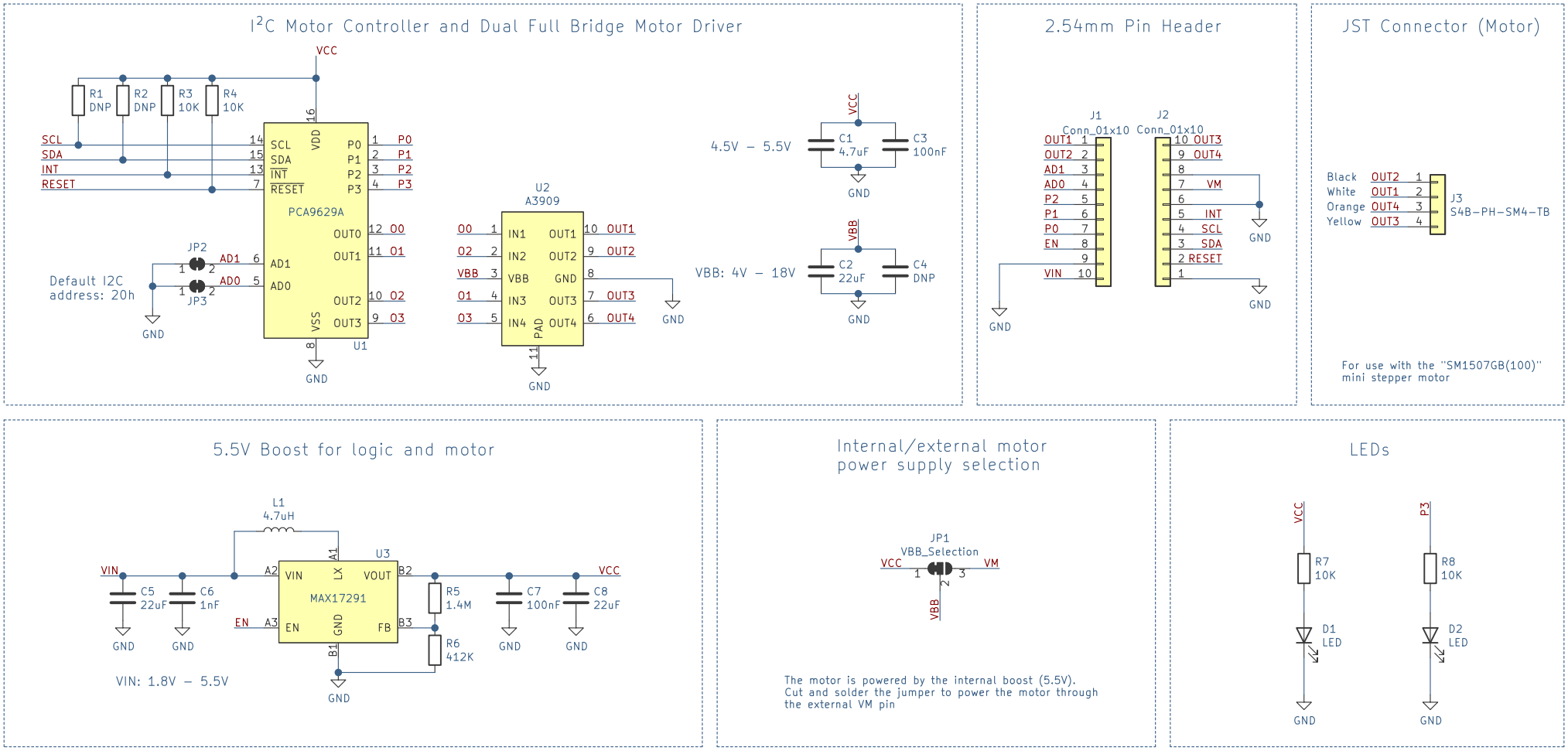

SKULLBOX

PCA9629A I²C Stepper Motor Controller Breakout Board

Sheet: /
File: i2c_stepper_driver_breakout.sch

Size: A4	Date: 2020-12-20	Rev: 1
Designed by: Igor Knippenberg		Page: 1/1